Culinary Arts Classroom Renovation at

Wildwood Middle/High School

4300 Pacific Ave, Wildwood, Cape May County, NJ 08260

Wildwood School District

4300 Pacific Ave, Wildwood, Cape May County, NJ 08260

EST 1918 **FVHD** architects planners

Fraytak Veisz Hopkins Duthie P C

New Jersey | Pennsylvania | fvhdpc.com

FRENCH & PARRELLO ASSOCIATES, P.A.

CONSULTING ENGINEERS | WALL - NEW JERSEY

DRAWING INDEX

GENERAL	
G001	TITLE SHEET, DRAWING INDEX AND GENERAL NOTES
G002	GENERAL INFORMATION
ARCHITECTURAL	
A100	SITE PLAN, ENLARGED PARTIAL SITE PLAN AND DETAILS
A101	DEMOLITION PLAN, FLOOR PLAN, REFLECTED CEILING PLAN, SCHEDULES, DETAILS AND NOTES
A401	ENLARGED ROOM LAYOUT, EQUIPMENT SCHEDULE AND DETAILS
PLUMBING	
P1.0	PLUMBING SYMBOLS NOTES AND ABBREVIATIONS
P1.1	PLUMBING OVERALL FLOOR PLAN
P2.0	PLUMBING DEMOLITION WORK PART PLAN
P3.0	PLUMBING NEW WORK PART PLANS
P3.1	PLUMBING NEW WORK PART PLAN - 2ND FLOOR
P4.0	PLUMBING DETAILS
P5.0	PLUMBING RISER DIAGRAMS
MECHANICAL	
M1.0	MECHANICAL SYMBOLS, NOTES, ABBREVIATIONS AND SCHEDULES
M2.0	MECHANICAL DEMOLITION PLAN AND NEW WORK PLANS - DUCTWORK
M2.1	MECHANICAL NEW WORK PLANS - PIPING
M3.0	MECHANICAL DETAILS
ELECTRICAL	
E1.0	ELECTRICAL SYMBOLS, NOTES AND ABBREVIATIONS
E2.0	ELECTRICAL DEMOLITION AND NEW WORK PLANS
E3.0	ELECTRICAL NEW WORK PLANS

APPLICABLE CODES

BUILDING SUBCODE	INTERNATIONAL BUILDING CODE / 2015, NEW JERSEY EDITION ICC / ANSI A117.1 - 2009 INTERNATIONAL FIRE CODE / 2015
PLUMBING SUBCODE	NATIONAL STANDARD PLUMBING CODE / 2015
ELECTRICAL SUBCODE	NATIONAL ELECTRICAL CODE (NFPA 70) 2014
MECHANICAL SUBCODE	INTERNATIONAL MECHANICAL CODE / 2015
REHABILITATION SUBCODE	NJUCC, SUBCHAPTER 6

GENERAL NOTES

1. ALL CONTRACTORS SHALL VISIT THE SITE AND VERIFY ALL EXISTING CONDITIONS BEFORE SUBMITTING A BID. DISCREPANCIES OR OMISSIONS MUST BE REPORTED TO THE ARCHITECT IN WRITING (15) DAYS PRIOR TO BID OPENING. IF HE OR SHE DOES NOT, CONTRACTOR SHALL CORRECT SAME AT NO CHANGE IN CONTRACT PRICE.
2. CONTRACTOR SHALL PROVIDE ALL REQUIRED SAFETY PROTECTION DURING CONSTRUCTION.
3. IT SHALL BE THE CONTRACTORS RESPONSIBILITY TO PROVIDE A SUFFICIENT WORK FORCE TO MEET COMPLETION DATES AS OUTLINED IN THE SPECIFICATIONS. NO EXCEPTIONS WILL BE ALLOWED.
4. DO NOT SCALE THE DRAWINGS.
5. DETAILS NOTED "TYPICAL" IMPLY ALL SUCH CONDITIONS BE TREATED SIMILARLY.
6. MATERIALS LISTED ON THE FINISH SCHEDULE REFER TO THE MAJORITY OF WALLS, FLOOR AND CEILING OF ROOMS SCHEDULED. REFER TO PLANS, DETAILS, INTERIOR ELEVATION, CEILING PLANS, AND NOTES FOR THOSE MATERIALS NOT INDICATED ON THE SCHEDULE BUT ARE STILL REQUIRED IN THE ROOM.
7. UNLESS OTHERWISE NOTED AND UNLESS FACTORY FINISHED, ALL EXPOSED SURFACES OF CMU, CONCRETE, PLASTER, WOOD, GYPSUM BOARD, HOLLOW METAL, HARDWOODS, MISC. METALS ETC., ARE TO RECEIVE PRIME AND FINISH COATS OF PAINT OR CLEAR FINISH AS SPECIFIED AND IN COLORS AS SELECTED BY ARCHITECT. EXCLUDED FROM THIS IS BRICK.
8. ALL OUTSIDE CORNERS OF INTERIOR CONCRETE MASONRY UNITS (CMU) ARE TO BE BULLNOSED UNLESS NOTED OTHERWISE.
9. CALL BEFORE YOU DIG. BEFORE DIGGING CONTRACTOR SHALL CALL 1-800-242-1776 TO HAVE UTILITIES IDENTIFY UNDERGROUND LOCATION OF ALL SERVICE LINES.
10. ALL WORK PERTAINING TO THESE DRAWINGS SHALL BE PERFORMED IN ACCORDANCE WITH ALL APPLICABLE STATE AND LOCAL CODES AND IN AGREEMENT WITH ALL AGENCIES HAVING JURISDICTION.
11. THE CONTRACTOR IS RESPONSIBLE TO SECURE ALL PERMITS, TO OBTAIN APPROVALS AS REQUIRED AND COORDINATE INSPECTION WITH LOCAL BUILDING INSPECTOR. ALL PERMIT AND APPLICATION FEES WILL BE PAID BY THE OWNER AND DELIVERED BY THE CONTRACTOR.
12. DRAWINGS AND SPECIFICATIONS COMPLEMENT EACH OTHER. WORK NOT SHOWN ON DRAWING BUT CALLED FOR IN THE SPECIFICATIONS IS STILL REQUIRED, AND ALL WORK NOT CALLED FOR IN SPECIFICATIONS, BUT CALLED OUT OR SHOWN IN DRAWINGS IS STILL REQUIRED.
13. THE OWNER WILL REMOVE AND RE-INSTALL ALL MOVEABLE EQUIPMENT. EACH CONTRACTOR IS RESPONSIBLE TO REMOVE, STORE AND RE-INSTALL EXISTING BUILT-IN EQUIPMENT REQUIRED TO PERFORM THEIR WORK UNLESS NOTES OTHERWISE.

OWNER APPROVAL

10-29-18

SUPERINTENDENT DATE

PRESIDENT OF BOARD OF EDUCATION DATE

NJ DOE No. 5790 - 050 -19 -1000

JOHN J. VEISZ, AIA, CSBA
NJ - 21AS00660900 | PA - RA051819

WILLIAM D. HOPKINS III, AIA, LEED AP
NJ - 21AI017600 | PA - RA025201

GEORGE R. DUTHIE JR., AIA, PP
NJ - 21AI019900

12/20/19
Date
Architect

FVHD architects planners
Fraytak Veisz Hopkins Duthie P C
FVHDPC.COM
Corporate: 1515 Lower Ferry Road - Trenton - New Jersey 08628
Pennsylvania: 140 Whitaker Ave - Mont Clare - Pennsylvania 19453

Project Name
Culinary Arts Classroom Renovation at Wildwood Middle/ High School

Project Owner Name
Wildwood School District

Project Location
4300 Pacific Avenue
Wildwood, NJ
08260

Project Number
5059

Project Date
12-20-2019

Checked By
JJV

Drawn By
JJD, TLS

Scale
As Noted

Drawing Name
Title Sheet, Drawing Index and General Notes

Revisions

No.	Date	Description

Drawing Number
G001

ABBREVIATIONS

AACB	Acrylic acoustical ceiling board	FA	Fire alarm	N	North	T	Tread
A/C	Air conditioning	FB	Face brick	NIC	Not in contract	TB.	Top of bank
AB	Anchor bolt	FBRK	Fire brick	NO	Number	TC	Terra cotta
ACB	Acoustical ceiling board	FD	Floor drain	NOM	Nominal	TEL	Telephone
AD	Area drain	FE	Fire extinguisher	NRC	Noise reduction coefficient	T&G	Tongue and groove
ADJ	Adjacent	FEC	Fire extinguisher cabinet	NTS	Not to scale	TG.	Top of grate
ADJT	Adjustable	FES	Flared end section			TGR	Top of grade
AFF	Above finished floor	FF	Finish floor			THK	Thick
AGG	Aggregate	FFE	Finished floor elevation	OA	Overall	THR	Threshold
AL	Aluminum	FGL	Fiberglass	OC	On center	TKS	Tackstrip
ALT	Alternating	FIN	Finish	OD	Outside diameter	TLT, TOIL	Toilet
ALT. BID	Alternate bid	FIX	Fixture	OH	Overhead	TOC	Top of curb
ANC	Anchor, Anchorage	FLG	Flashing	OP	Opaque	TOM	Top of masonry
ANOD	Anodized	FLR	Floor	OPG	Opening	TOP	Top of plank
AP	Access panel	FND	Foundation	OPP	Opposite	TOS	Top of steel
APX	Approximate	FR	Frame			TPD	Toilet paper dispenser
ARCH	Architect	FRP	Fiberglass reinforced polyester			TPG	Tempered plate glass
		FP	Fire proof	PAR	Parallel	TPTN	Toilet partition
		FRT	Fire retardant	PBD	Particleboard	TV	Television
BB.	Bottom of bank	FS	Floor sink	PC	Plumbing contractor	TYP	Typical
BD	Board	FT	Feet	PCC	Precast concrete	TZ	Terrazzo
BIT	Bituminous	FTG	Footing	PERI	Perimeter		
BF	Barrier Free	FUR	Furring	PG	Plate glass		
BLDG	Building			PK	Parking	UC	Undercut
BLK	Block			PL	Plate	UL	Underwriter's laboratory
BLKG	Blocking	GA	Gauge	P LAM	Plastic laminate	UNO	Unless noted otherwise
BM	Bench mark	GB	Grab bar	PLAS	Plaster	UR	Urinal
BOT	Bottom	GC	General contractor	PNL	Panel		
BRG	Bearing	GCMU	Glazed concrete masonry unit	PNT	Paint (ed)		
BRK	Brick	GD	Grade, grading	PR	Pair	VAT	Vinyl asbestos tile
BRZ	Bronze	GEP	Gypsum wall board epoxy painted	PTT	Precast Terrazzo Tile	VB	Vapor barrier
BS	Both sides	GF	Ground face	PRTT	Precast Resilient Terrazzo Tile	VCT	Vinyl composition tile
BUR	Built up roof	GL	Glass, Glazing	PSF	Pounds per square foot	VERT	Vertical
		GLB	Glass block	PSI	Pounds per square inch	VEST	Vestibule
		GP	Gypsum wall board painted	PTD	Paper towel dispenser	VIF	Verify In Field
CAB	Cabinet	GPDW	Gypsum drywall	PTN	Partition	VIN	Vinyl
CB	Catch basin	GR	Grade	PTR	Paper towel receptor	VNR	Veneer
CEM PLAS	Cement plaster	GRD.F.BLK	Ground face block	PVC	Polyvinyl chloride	VTR	Vent thru roof
CEP	CMU epoxy painted	GSFT	Glazed structural facing tile	PVMT	Pavement		
CFL	Counter flashing	GST	Glazed structural tile	PWD	Plywood		
CHT	Ceiling height	GT	Grout			W	West
CI	Cast iron	GV	Galvanized			W/	With
CJ	Control joint	GVL	Gravel	QT	Quarry tile	W/O	Without
CL	Centerline / closet	GWB	Gypsum Wall Board	QTY	Quantity	WB	Wood base
CLG	Ceiling					WC	Water closet
CLR	Clear	HB	Hose bib			WD	Wood
CMU	Concrete masonry unit	HD	Head	R	Riser	WDW	Window
COL	Column	HDW	Hardware	RA	Return air	WG	Wire glass
CONC	Concrete	HM	Hollow metal	RAD	Radius	WH	Wall hung
COND	Condition	HOR	Horizontal	RBT	Rubber tile	WIN	Window
CONST	Construction	HP	Highpoint	RCP	Reinforced concrete pipe	WM	Wire mesh
CONT	Continuous	HR	Hour	RD	Roof drain	WP	Waterproofing / Work point
CONTR	Contractor	HTR	Heater	RE	Reinforce (d), (ing)	WPT	Work point
COOL	Cooling	HVC	Heating & ventilation contractor	REF	Reference (s)	WR	Water repellent
CP	CMU Painted			REFL	Reflected	WS	Waterstop
CPR	Copper			REG	Register	WSCT	Wainscot
CPT	Carpet	ID	Inside diameter	REM	Remove	WTW	Wall to wall
CRS	Course	INL	Inlet	REQ	Required	WWF	Welded wire fabric
CSMU	Calcium silicate masonry unit	INS	Insulate (d), (ion)	RES	Resilient		
CST	Cast stone	INT	Interior	RET	Return		
CT	Ceramic tile	INV	Invert	RFG	Roofing		
CTP	Clear tempered plate glass			RFH	Roof hatch		
CTR	Counter	JC	Janitor's closet	RH	Right hand		
CWP	Clear wire plate	JT	Joint	RM	Room		
				RO	Rough opening		
				ROW	Right of way		
D	Drain (s)	KCPL	Keene's cement plaster	RRT	Radial rubber tile		
DBL	Double	KIT	Kitchen	RUB	Rubber, base		
DF	Drinking fountain	KPL	Kickplate	RV	Radon vent		
DIM	Dimension			RWC	Rain water conductor		
DIAM	Diameter						
DK	Deck	L	Length	S	South		
DMB	Dry marker board	LAB	Laboratory	SBS	Styrene butadiene styrene		
DN	Down	LAM	Laminate (d)	SEC	Security		
DR	Door	LAV	Lavitory	SC	Solid core		
DS	Downspout	LDR	Leader	SCH	Schedule		
DW	Dumbwaiter	LF	Lineal foot/Linear feet	SCT	Structural clay tile		
		LH	Left-hand	SD	Storm drain		
E	East	LL	Liveload	SFGL	Safety glass		
EA	Each	LOC	Location	SHM	Security hollow metal		
EB	Exibition Board	LPT	Low point	SHTH	Sheathing		
EC	Electrical contractor	LTL	Lintel	SIM	Similar		
EF	Exhaust fan	LW	Lightweight	SKL	Skylight		
EIFS	Exterior insulated finish system	LWC	Lightweight concrete	SL	Sleeve		
EJ, EXP JT	Expansion joint			SNT	Sealant		
EL	Elevation			SOG	Slab on grade		
ELEC	Electrical	MAS	Masonry	SP	Soundproof		
ELEV	Elevator	MAT	Material	SPAC'G	Spacing		
EMER	Emergency	MAX	Maximum	SPEC	Specification		
ENC	Enclosure	MC	Mechanical contractor	SPF, BLK	Split face block		
ENTR	Entrance	MECH	Mechanical	SPK	Speaker		
EOP	Edge of paving	MED	Medium	SQ	Square		
EP	Epoxy paint	MET	Metal	SQ. FT.	Square foot / feet		
EPDM	Ethylene propylene diene monomers	MFR	Manufacturer	SST	Stainless steel		
EQ	Equal	MH	Manhole	STD	Standard		
EQP	Equipment	MIN	Minimum	STG	Seating		
ERF	Epoxy Resinous Flooring	MISC	Miscellaneous	STR	Structural		
ETR	Existing To Remain	MMB	Membrane	SUS	Suspended		
ETR-R	Existing To Remain - Refinished	MO	Masonry opening	SWF	Security Window Film		
ETZ	Epoxy Terrazzo	MOV	Movable	SYN	Synthetic		
EWC	Electric water cooler	MR	Mop receptor	SYS	System		
EXB	Expansion bolt	MT	Marble threshold				
EXG	Existing	MTD	Mounted				
EXP	Exposed	MTFR	Metal furring				
EXT	Exterior	MULL	Mullion				

SYMBOL LIST

- section number / WALL SECTION / drawing number
- detail number / DETAIL INFORMATION / drawing number
- DEMOLITION NOTE REFERENCE TAG SEE DEMOLITION NOTES
- WINDOW OR CURTAINWALL TYPE SEE WINDOW/CURTAINWALL SCHEDULE
- DOOR NUMBER SEE DOOR SCHEDULE
- BORROWED LIGHT NUMBER SEE DOOR SCHEDULE
- ROOM NAME/NUMBER
- EQUIPMENT NUMBER OR LETTER
- COLUMN NUMBER OR LETTER
- elevation number / INTERIOR ELEVATION / drawing number

MATERIAL LEGEND

A.C.B. / A.C.T. — CMU — EARTH — POROUS FILL — PLASTER / GYP BD / EIFS — CONCRETE — STUD PARTITION — BATT INSULATION — ROUGH WOOD — PLYWOOD — FINISH WOOD — FACE BRICK — METAL / STEEL — RIGID INSULATION

EXISTING FIRE ALARM SYSTEM NOTE

IF ANY PORTION OF THE EXISTING FIRE ALARM SYSTEM MUST BE TAKEN OUT OF SERVICE FOR ANY LENGTH OF TIME, THE LOCAL FIRE MARSHAL MUST BE CONTACTED AND MUST APPROVE SHUTDOWN PLANS, PROCEDURES AND FIRE WATCH PLANS THAT WILL BE IMPLEMENTED.

CONTRACTOR SHALL BE FULLY RESPONSIBLE FOR COMPLYING WITH THE REQUIREMENTS OF THE LOCAL FIRE MARSHAL CONCERNING THE EXISTING FIRE ALARM SYSTEM SHUTDOWN PLANS, PROCEDURES AND FIRE WATCH PLANS THAT WILL BE IMPLEMENTED FOR SYSTEM INTERRUPTIONS DURING CONSTRUCTION.

NOTE THAT TEMPORARILY COVERING EXISTING DETECTION DEVICES TO PREVENT ACCIDENTAL ALARM ACTIVATIONS DUE TO DUST AND DIRT CONSTITUTES A PARTIAL SHUTDOWN OF THE EXISTING FIRE ALARM SYSTEM.

RESPONSIBILITY CHART

MATERIAL	FURNISHED BY	INSTALLED BY
EQUIPMENT CURB	HVAC CONTRACTOR	HVAC CONTRACTOR
EQUIPMENT FLASHING	GENERAL CONTRACTOR	GENERAL CONTRACTOR
COUNTER FLASHING	HVAC CONTRACTOR	GENERAL CONTRACTOR

NOTE:
THIS CHART SHALL ONLY APPLY AT CONDITIONS OF NEW ROOF CONSTRUCTION WHERE THERE IS A GENERAL PRIME CONTRACTOR AND AN HVAC PRIME CONTRACTOR CONTRACTED FOR THE PROJECT.

FIRE-RATED PENETRATION CHART

CONCRETE OR BLOCK WALLS		
TYPE OF PENETRATE	FIRE RATING	UL CLASSIFIED SYSTEM
CIRCULAR BLANK OPENINGS	1	CAJ 0055, CAJ 0070
	2	CAJ 0055, CAJ 0070
	3	CAJ 0055
SINGLE METAL PIPES OR CONDUIT	1	CAJ 1226, WJ 1021
	2	CAJ 1226, WJ 1021
	3	CAJ 1226, WJ 1041, WJ 1042
SINGLE NON-METALLIC PIPE OR CONDUIT (I.E. PVC, CPVC, ABS, FRP, ENT)	1	CAJ 2109, CAJ 2098, CAJ 2167
	2	CAJ 2109, CAJ 2098, CAJ 2167
	3	CAJ 2109, CAJ 2098
SINGLE OR BUNDLED CABLES	1	WJ 3036, CAJ 3095, CAJ 3096
	2	WJ 3036, CAJ 3095, CAJ 3096
	3	CAJ 3095, CAJ 3096
CABLE TRAY	1	WJ 4016, CAJ 4034, CAJ 4035
	2	WJ 4016, CAJ 4034, CAJ 4035
	3	CAJ 4034, CAJ 4035
SINGLE INSULATED PIPES	1	CAJ 5090, CAJ 5091, CAJ 5061
	2	CAJ 5090, CAJ 5091, CAJ 5061
	3	CAJ 5090, CAJ 5061
ELECTRICAL BUSWAY	1	CAJ 6006, CAJ 6017
	2	CAJ 6006, CAJ 6017
	3	CAJ 6006, CAJ 6017
NON-INSULATED MECHANICAL DUCTWORK WITHOUT DAMPERS	1	CAJ 7046, CAJ 7051, WJ 7021, WJ 7022
	2	CAJ 7046, CAJ 7051, WJ 7021, WJ 7022
	3	CAJ 7046, CAJ 7051
MIXED PENETRANTS	1	CAJ 8041, CAJ 8056, WJ 8007
	2	CAJ 8041, CAJ 8056, WJ 8007
	3	CAJ 8041, CAJ 8056, WJ 8007

(13) U.L. ASSEMBLIES AT CONCRETE OR BLOCK WALL PENETRATIONS
N.T.S.

CONCRETE FLOORS		
TYPE OF PENETRANT	FIRE RATING	UL CLASSIFIED SYSTEM
CIRCULAR BLANK OPENINGS	1	FA 0006, CAJ 0055, CAJ 0070
	2	FA 0006, CAJ 0055, CAJ 0070
	3	FA 0006, CAJ 0055
SINGLE METAL PIPES OR CONDUIT	1	CAJ 1226, FA 1017
	2	CAJ 1226, FA 1017
	3	CAJ 1226, FA 1017
SINGLE NON-METALLIC PIPE OR CONDUIT (I.E. PVC, CPVC, ABS, FRP, ENT)	1	FA 2053, FA 2025, CAJ 2109, CAJ 2098, CAJ 2141, CAJ 2167, CBJ 2021
	2	FA 2053, FA 2025, CAJ 2109, CAJ 2098, CAJ 2141, CAJ 2167, CBJ 2021
	3	FA 2054, CAJ 2109, CAJ 2098
SINGLE OR BUNDLED CABLES	1	FA 3007, CAJ 3095, CAJ 3096
	2	FA 3007, CAJ 3095, CAJ 3096
	3	FA 3007, CAJ 3095, CAJ 3096
CABLE TRAY	1	CAJ 4034, CAJ 4035
	2	CAJ 4034, CAJ 4035
	3	CAJ 4034, CAJ 4035
SINGLE INSULATED PIPES	1	FA 5015, FA 5016, CAJ 5090, CAJ 5091, CAJ 5098
	2	FA 5015, FA 5016, CAJ 5090, CAJ 5091, CAJ 5098
	3	FA 5016, CAJ 5090
ELECTRICAL BUSWAY	1	CAJ 6006, CAJ 6017
	2	CAJ 6006, CAJ 6017
	3	CAJ 6006, CAJ 6017
NON-INSULATED MECHANICAL DUCTWORK WITHOUT DAMPERS	1	CAJ 7046, CAJ 7051
	2	CAJ 7046, CAJ 7051
	3	CAJ 7046, CAJ 7051
MIXED PENETRANTS	1	CAJ 8041, CAJ 8056
	2	CAJ 8041, CAJ 8056
	3	CAJ 8041, CAJ 8056

(14) U.L. ASSEMBLIES AT CONCRETE FLOOR PENETRATIONS
N.T.S.

GYPSUM WALLBOARD ASSEMBLIES		
TYPE OF PENETRANT	FIRE RATING	UL CLASSIFIED SYSTEM
METAL PIPES OR CONDUIT	1	WL 1054, WL 1058, WL 1164
	2	WL 1054, WL 1058, WL 1164
NON-METALLIC PIPES OR CONDUIT	1	WL 2078, WL 2075, WL 2128
	2	WL 2078, WL 2075, WL 2128
SINGLE OR BUNDLED CABLES	1	WL 3065, WL 3111, WL 3112
	2	WL 3065, WL 3111, WL 3112
CABLE TRAY	1	WL 4011, WL 4019
	2	WL 4011, WL 4019
INSULATED PIPES	1	WL 5028, WL 5029, WL 5047
	2	WL 5028, WL 5029, WL 5047
NON-INSULATED MECHANICAL DUCTWORK WITHOUT DAMPERS	1	WL 7017, WL 7040, WL 7042
	2	WL 7040, WL 7042
MIXED PENETRANTS	1	WL 1095, WL 8013
	2	WL 1095, WL 8013

(15) U.L. ASSEMBLIES AT GYPSUM WALL BOARD PENETRATIONS
N.T.S.

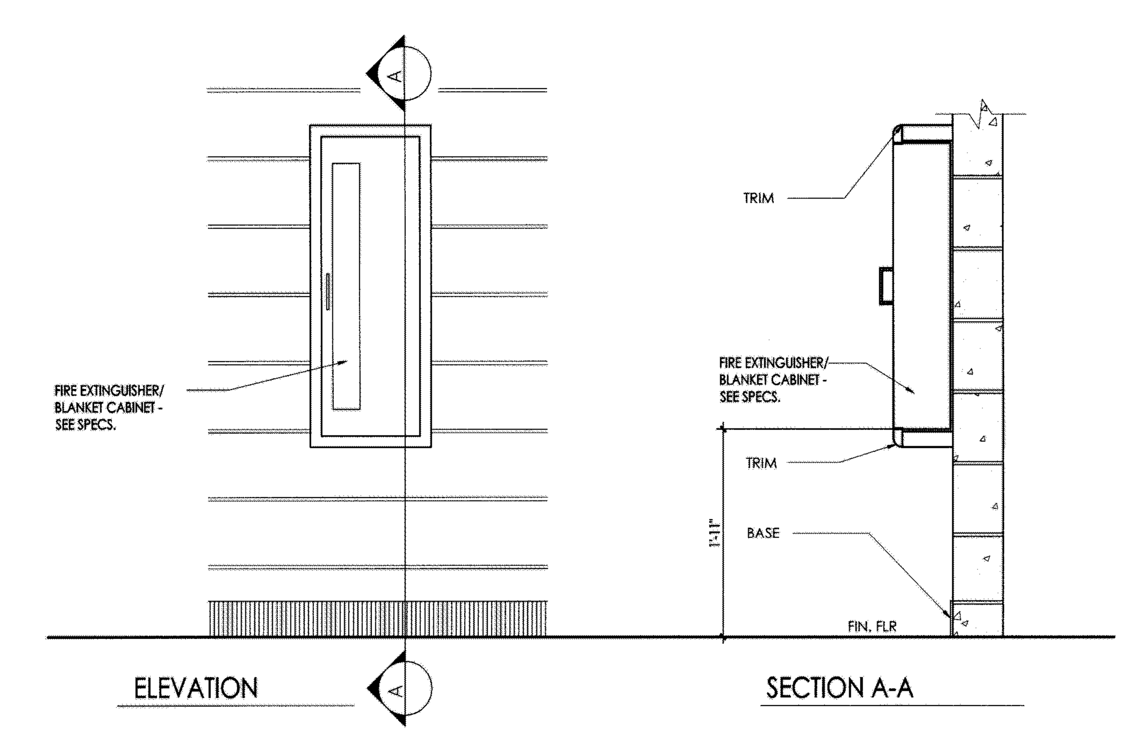

(5) FIRE EXTINGUISHER DETAIL
1" = 1'-0"

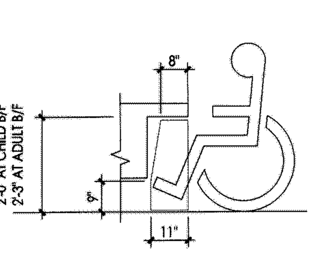

KNEE CLEARANCE

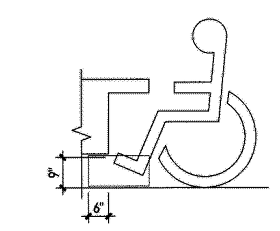

TOE CLEARANCE

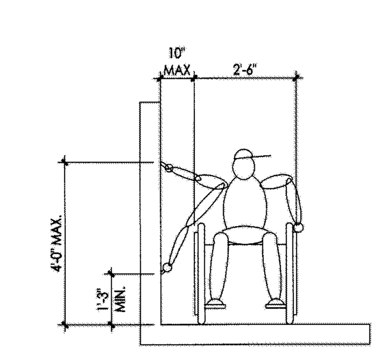

HIGH AND LOW UNOBSTRUCTED SIDE REACH LIMITS

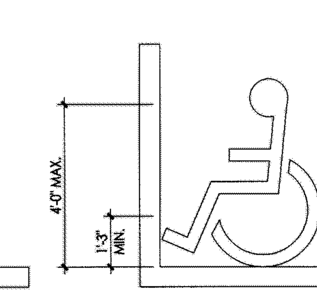

HIGH AND LOW UNOBSTRUCTED FORWARD REACH LIMITS

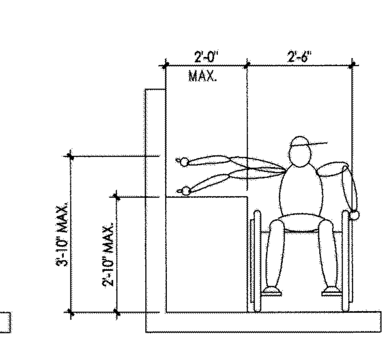

UNOBSTRUCTED SIDE REACH LIMITS

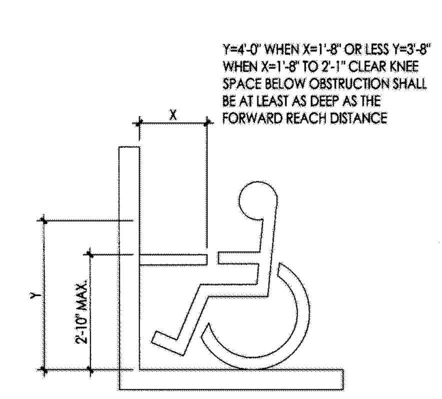

OBSTRUCTED FORWARD REACH LIMITS

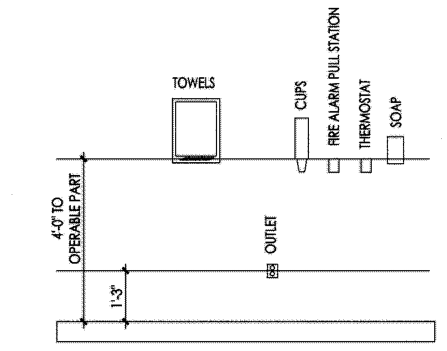

ACCESSIBLE CONTROLS & OPERATING MECHANISMS - FORWARD APPROACH

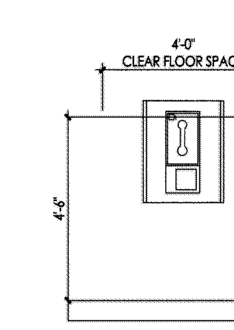

TELEPHONE PARALLEL APPROACH

JOHN J. VEISZ, AIA, CSBA
NJ - 21AI00866900 | PA - RA010819B
WILLIAM D. HOPKINS III, AIA, LEED AP
NJ - 21AI01706000 | PA - RA012520X
GEORGE R. DUTHIE JR., AIA, PP
NJ - 21AI01299200
Architect 12/20/19 Date

FVHD architects planners
EST 1918
Fraytak Veisz Hopkins Duthie PC
Corporate: 1515 Lower Ferry Road - Trenton - New Jersey 08628
Pennsylvania: 140 Whitaker Ave - Mont Clare - Pennsylvania 19453
FVHDPC.COM

Project Name
Culinary Arts Classroom Renovation at Wildwood Middle/ High School

Project Owner Name
Wildwood School District

Project Location
4300 Pacific Avenue
Wildwood, NJ 08260

Project Number
5059
Project Date
12-20-2019
Checked By
JJV
Drawn By
TLS
Scale
As Noted

Drawing Name
General Information

Revisions		
No.	Date	Description

Drawing Number
G002

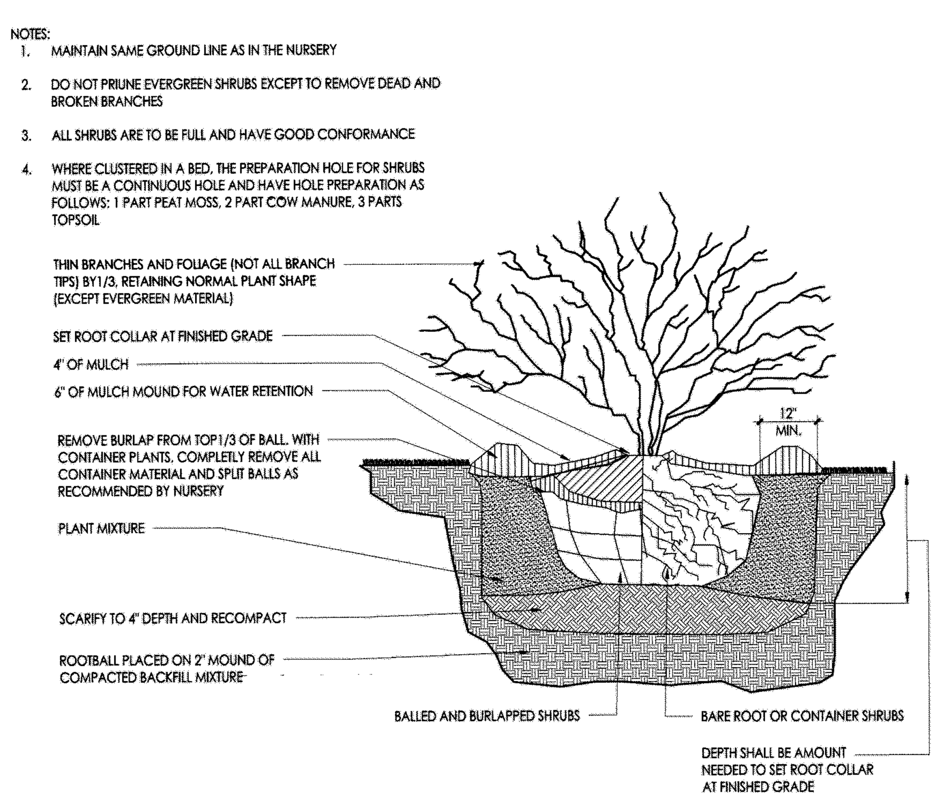

1A SHRUB PLANTING DETAIL
NOT TO SCALE

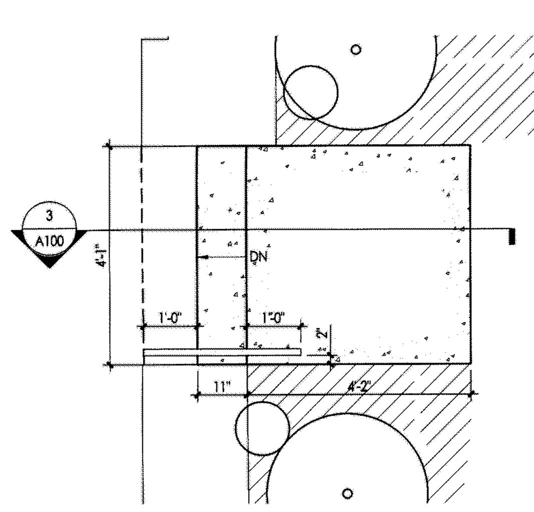

2 ENLARGED STAIR PLAN
1/2" = 1'-0"

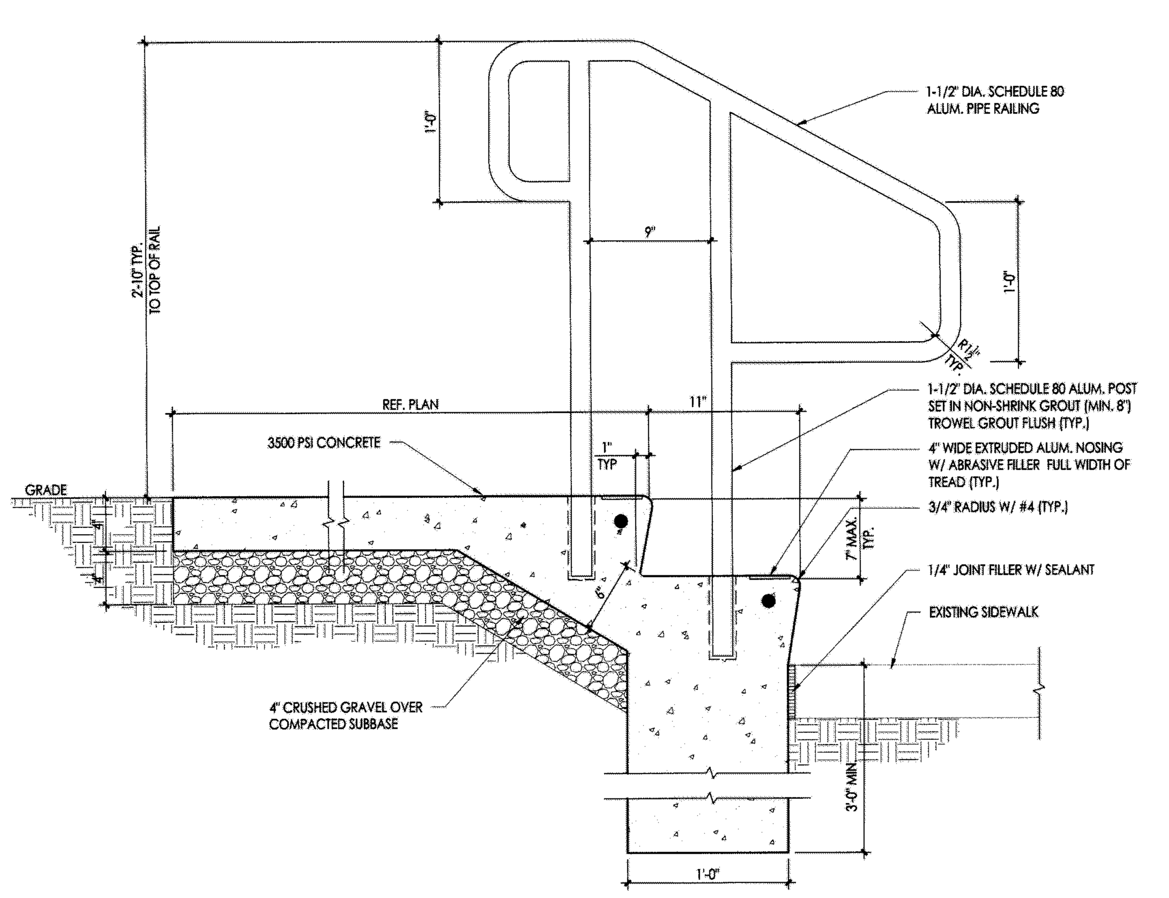

3 CONCRETE STAIR DETAIL
1 1/2" = 1'-0"

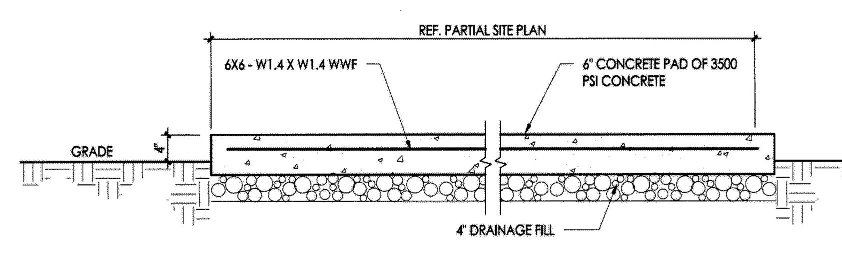

4 CONCRETE PAD DETAIL - MECH. DUCT SUPPORT
3/4" = 1'-0"

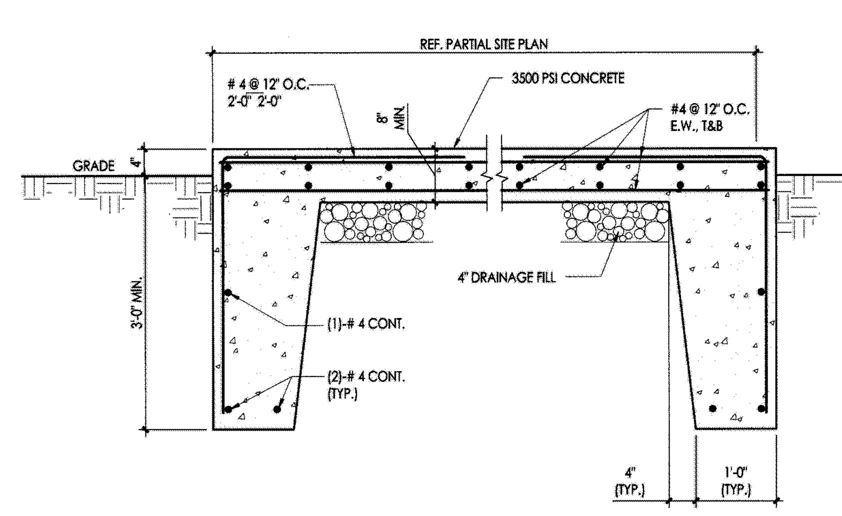

5 CONCRETE SERVICE PAD DETAIL - MECH. UNIT SUPPORT
3/4" = 1'-0"

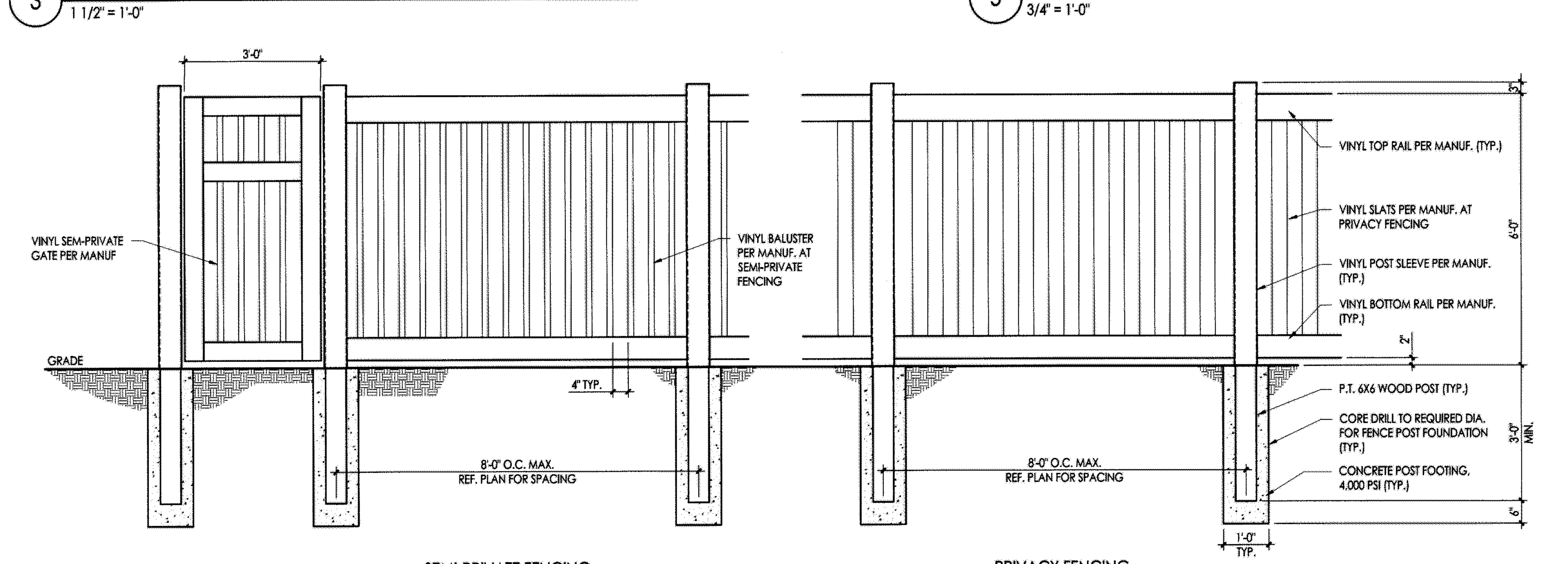

NOTES:
1. COLOR AND STYLE OF ALL POSTS AND RAILS SHALL BE AS SELECTED BY THE ARCHITECT
2. CONTRACTOR TO SUBMIT SHOP DRAWINGS OF FENCE DESIGN FOR REVIEW

6 FENCING DETAIL
1/2" = 1'-0"

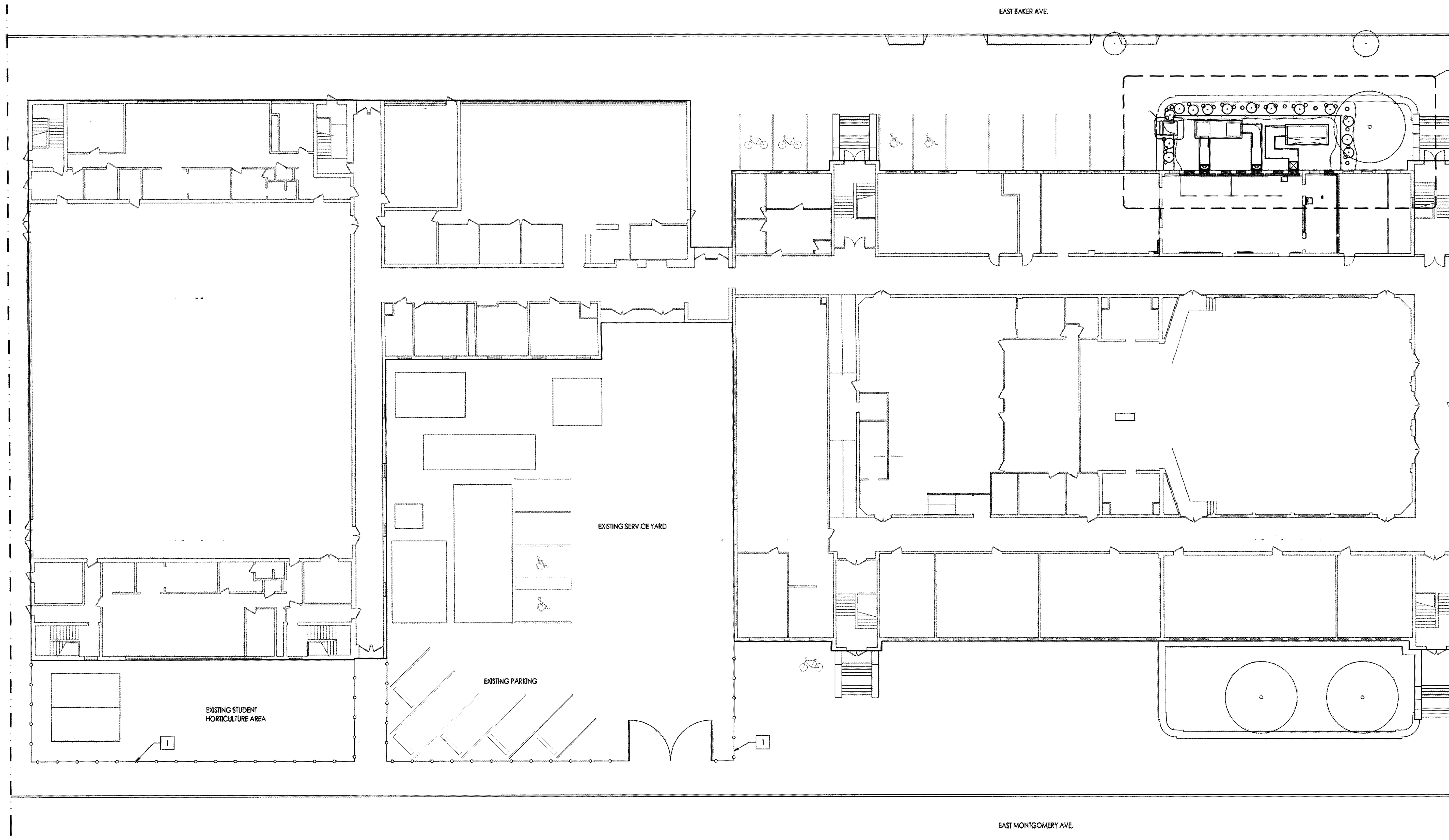

1 EXISTING HIGH SCHOOL - SITE PLAN
1/16" = 1'-0"

PLANTING NOTES:

1. ALL PLANT MATERIALS USED SHALL BE TRUE TO NAME AND SIZE IN CONFORMITY WITH THE CURRENT EDITION OF THE AMERICAN STANDARD OF NURSERY STOCK AND SHALL BE TYPICAL OF THEIR SPECIES OR VARIETY. ALL PLANTS SHALL HAVE NORMAL, WELL-DEVELOPED BRANCHES AND VIGOROUS ROOT SYSTEMS. THEY SHALL BE SOUND, HEALTHY, VIGOROUS, FREE FROM DEFECTS, DISFIGURING KNOTS, ABRASIONS OF THE BARK, SUN SCALD INJURIES, PLANT DISEASES, INSECT EGGS, BORERS, AND ALL OTHER FORMS OF INFECTION. ALL PLANTS SHALL BE NURSERY GROWN.
2. ALL PLANT MATERIAL SHALL BEAR THE SAME RELATION TO FINISHED GRADE AS IT BORE TO EXISTING GRADE AT THE NURSERY.
3. ALL PLANT MATERIAL IS TO BE GUARANTEED FOR A PERIOD OF TWELVE MONTHS FROM TIME OF FINAL ACCEPTANCE OF THE PROJECT OR AS REGULATED BY THE APPROVING AUTHORITY. IF ANY PLANTS ARE DEAD OR IN AN UNHEALTHY CONDITION BEFORE FINAL ACCEPTANCE OF THE PROJECT, THE LANDSCAPE CONTRACTOR SHALL REPLACE THEM AT HIS EXPENSE.
4. ANY SUBSTITUTIONS OF PLANT MATERIAL WITH REGARDS TO SIZE, SPECIES, VARIETY, ETC., SHALL BE SUBJECT TO APPROVAL BY THE PROJECT ENGINEER AND THE OWNER.
5. PRUNE NEWLY PLANTED TREES AS DIRECTED BY THE PROJECT ENGINEER.
6. UNDER NO CIRCUMSTANCES SHOULD THE MAIN LEADER OF A TREE BE TOPPED.
7. CUT AND REMOVE BURLAP FROM TOP ONE-THIRD OF BALL. ALL PLASTIC MATERIAL, SYNTHETIC BURLAP AND STRING OR CONTAINERS SHALL BE REMOVED AT THE TIME OF PLANTING. THE WIRE BASKETS AND PLASTIC LINERS OF CONTAINERS OF GROWN TREES AND SHRUBS MUST BE COMPLETELY REMOVED. NO CONTAINER GROWN MATERIAL WILL BE ACCEPTED IF IT IS ROOT BOUND.
8. THE DEPTH OF PLANT PITS SHALL BE INCREASED BY 12" THROUGH THE ADDITION OF LOOSE AGGREGATE (3/4" TO 1 1/2" DIAMETER) WHEREVER POOR DRAINAGE OCCURS OR WHERE DIRECTED BY THE PROJECT ENGINEER.
9. GUY WIRES SHALL BE LOCATED SO THAT THEY WILL NOT PULL CROTCH APART. GUY WIRES TO THE SECOND BRANCH (MINIMUM ONE-THIRD HEIGHT OF TREE). USE TWO GUYS PER TREE UNLESS OTHERWISE INDICATED. TREE STAKES AND GUY WIRES SHALL BE REMOVED AFTER ONE GROWING SEASON.
10. PLANTING BACKFILL MIXTURE SHALL CONSIST OF ONE PART TOPSOIL, ONE PART NATIVE SOIL AND ONE PART PEAT MOSS. NOTE THAT PLANTING MIXTURE MAY CHANGE BASED UPON SOIL CONDITIONS.
11. MULCH, MINIMUM 4" IN DEPTH, SHALL BE EITHER WOOD CHIPS, PINE BARK, OR SHREDDED HARDWOOD BARK NOT EXCEEDING 2" IN GREATEST DIMENSION. ALL MULCHED BEDS SHALL BE RETAINED BY AN ALUMINUM BORDER SUCH AS PERMALOC CLEANLINE XL OR APPROVED EQUAL, WHEREVER A MULCHED AREA ADJOINS A VEGETATED LAWN AREA (NOT RESTRAINED BY A HARD SURFACE).
12. ALL PLANT MATERIAL SHALL BE GIVEN A MINIMUM OF 5 GALLONS OF WATER AT THE TIME OF INSTALLATION AND SHALL BE WATERED AT INTERVALS DURING ESTABLISHMENT TO ENSURE ADAPTATION TO THE SITE PRIOR TO THE INSTALLATION OF THE PLANT MATERIAL, THE CONTRACTOR SHALL FILL EACH PLANTING PIT WITH WATER AND ALLOW IT TO FULLY PERCOLATE INTO THE GROUND PRIOR TO PLACEMENT OF THE PLANT. THE CONTRACTOR SHALL NOTIFY THE ENGINEER OF ANY PERCOLATION PROBLEMS PRIOR TO INSTALLATION.
13. NO PLANTING SHALL BE EXECUTED DURING ABNORMALLY HOT WEATHER NOR WHEN THE GROUND IS FROZEN.
14. THE CONTRACTOR SHALL REMOVE ALL DAMAGED BRANCHES AND NURSERY TAGS AT THE TIME OF INSTALLATION.
15. (3) SLOW RELEASE FERTILIZER TABLETS OR PACKETS OF 20-10-5 COMPOSITION SHALL BE ADDED TO ALL PLANTING PITS FOR TREES.

CONSTRUCTION NOTES:

INDICATED BY: X

1. 6'-0" HIGH VINYL PRIVACY FENCE REF. DETAIL 6/A100
2. CONCRETE STAIR
3. 8" DEEP CONCRETE SERVICE PAD. REF. DETAIL 5/A100. REFER TO MECHANICAL DRAWINGS FOR UNIT INFO. AND RAILING DETAILS
4. LAWN BUFFER TO BE MAINTAINED. SEE SPECS FOR FINISH GRADING AND SEEDING INFO.
5. SHRUBS. SEE SPECIFICATIONS. REFER TO DETAIL 1A/A100 AND PLANTING NOTES
6. 4" CRUSHED GRAVEL ON WEED BARRIER
7. STAINLESS STEEL DUCT WORK TO EXTEND UP EXTERIOR WALL TO ABOVE 1ST FLOOR CLASSROOM CEILING. REFER TO MECHANICAL DRAWINGS
8. 1-1/2" DIA. NOM. SCHEDULE 80 ALUM. PIPE RAIL W/ TOP RAIL @ 34" A.F.F. REF. DETAIL 3/A100
9. PRESSURE TREATED 6X6 WOOD POST W/ VINYL SLEEVE. REF. DETAIL 5/A100
10. 6'-0" HIGH VINYL SEMI-PRIVATE FENCE AND GATE. REF. DETAIL 6/A100
11. 1/4" PRE-MOLDED JOINT FILLER
12. 6" DEEP CONCRETE DUCT SUPPORT PAD. REF. DETAIL 4/A100. COORDINATE LOCATION, SIZE AND CONFIGURATION OF PADS WITH NEW DUCTS. REFER TO MECHANICAL DRAWINGS FOR DUCT INFO. AND RAILING DETAILS

GENERAL NOTES:

1. MECHANICAL UNITS AND DUCT LAYOUT IS DIAGRAMMATIC. REFER TO HVAC DRAWINGS FOR MORE INFORMATION
2. CONTRACTOR TO CAREFULLY INSTALL NEW CONCRETE PAD AND FENCE POST FOOTINGS SO AS TO MISS ALL EXISTING UNDERGROUND UTILITIES.
3. PERFORM ON SITE VERIFICATION OF UNDERGROUND UTILITIES AND COORDINATE PROPOSED LOCATION OF NEW FENCE POSTS AND FOOTINGS IN A SHOP DRAWING SUBMITTAL.
4. PRIOR TO START OF SITE WORK, CONTRACTOR IS TO VERIFY EXISTING CONDITIONS AND GRADING. CONTRACTOR IS TO PROVIDE SHOP DRAWING SUBMITTAL FOR RE-GRADING AS REQUIRED FOR ARCHITECT APPROVAL.
5. SAWCUT AND DEMOLISH EXISTING PARTIAL RETAINING WALL TO EXTENT AS INDICATED ON SITE PLAN. RE-GRADE AND RE-SEED AT EXTERIOR TO MATCH EXISTING ADJACENT GRADE. PATCH AND REPAIR ALL DAMAGE CAUSED BY DEMOLITION TO MATCH EXISTING ADJACENT FINISH. ALL WORK BY G.C.
6. UNLESS NOTED OTHERWISE ON SITE WORK DRAWINGS, ALL SITE WORK DEMOLITION WORK IN THIS AREA SHALL BE BY THE GENERAL CONTRACTOR. GENERAL CONTRACTOR SHALL BE RESPONSIBLE TO PATCH AND REPAIR ALL DAMAGE CAUSED BY SITE WORK DEMOLITION TO MATCH EXISTING ADJACENT FINISH. SEE SITE PLAN FOR ADDITIONAL INFORMATION.

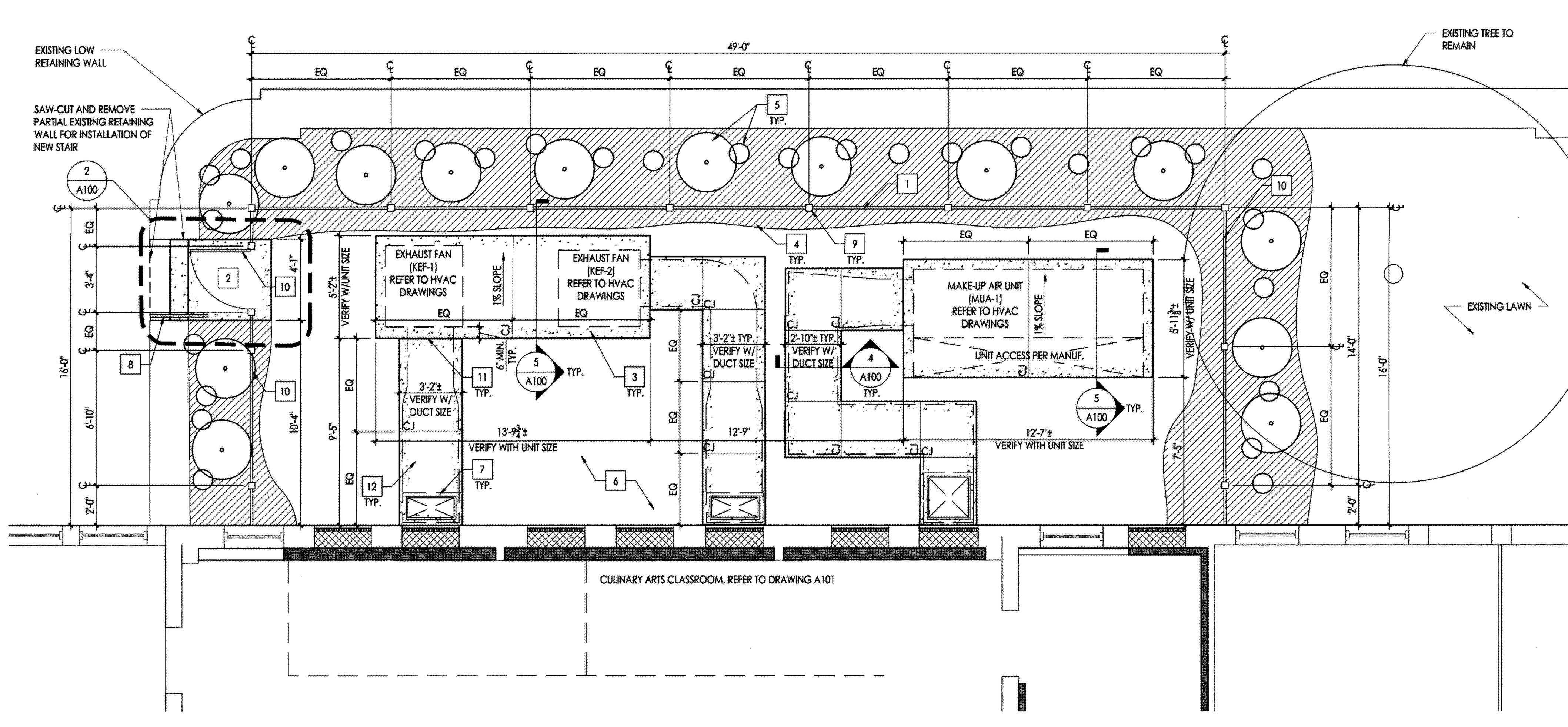

7 ENLARGED PARTIAL SITE PLAN
1/4" = 1'-0"

JOHN J. VEISZ, AIA, CSBA
NJ - 21AI00866900 | PA - RA010819B
WILLIAM D. HOPKINS III, AIA, LEED AP
NJ - 21AI01706000 | PA - RA012520X
GEORGE R. DUTHIE JR., AIA, PP
NJ - 21AI01299200

Architect Date 12/20/19

FVHD architects planners EST 1918
Fraytak Veisz Hopkins Duthie PC
Corporate: 1515 Lower Ferry Road - Trenton - New Jersey 08628
Pennsylvania: 140 Whitaker Ave - Mont Clare - Pennsylvania 19453
FVHDPC.COM

Project Name	Culinary Arts Classroom Renovation at Wildwood Middle/ High School
Project Owner Name	Wildwood School District
Project Location	4300 Pacific Avenue Wildwood, NJ 08260
Project Number	5059
Project Date	12-20-2019
Checked By	JJV
Drawn By	TTH, SPC
Scale	
Drawing Name	SITE PLAN, ENLARGED PARTIAL SITE PLAN AND DETAILS

Revisions

No.	Date	Description

Drawing Number
A100

DEMOLITION / RENOVATION NOTES:

INDICATED BY: (X)

SEE GENERAL NOTES ON DEMOLITION ON THIS DRAWING.

GENERAL NOTE: THE OWNER HAS THE RIGHT OF FIRST REFUSAL FOR ALL EQUIPMENT AND FIXTURES (CABINETS, SHELVING, PLUMBING FIXTURES, ETC.) REMOVED UNDER CONTRACT. IF THE OWNER DOES NOT EXERCISE THIS RIGHT FOR AN INDIVIDUAL PIECE OF EQUIPMENT, THE CONTRACTOR SHALL REMOVE SAID EQUIPMENT FROM THE SITE.

EXTERIOR / BUILDING

1. BRACE AND SHORE UP EXISTING ADJACENT WALLS AND OPENINGS TO REMAIN. REMOVE EXISTING WINDOW AND FRAME SYSTEM, INTERIOR AND EXTERIOR SILLS, AND ALL APPURTENANCES (INCLUDING INTEGRAL SHADES, FANS, DUCTS, VENTING DUCTS, ETC.) IN THEIR ENTIRETY. SEE GENERAL NOTE. PATCH AND REPAIR ALL VOIDS AND DAMAGE CAUSED BY REMOVAL TO MATCH EXISTING ADJACENT EXTERIOR FINISHES. INFILL EXISTING OPENING TO REMAIN WITH NEW EXTERIOR CMU/EIFS WALL SYSTEM. COORDINATE INFILL OF OPENINGS WITH NEW HVAC WORK PENETRATIONS FOR NEW HOOD EXHAUST DUCTWORK. CONTRACTOR SHALL TAKE ALL NECESSARY STEPS TO ENSURE BUILDING SECURITY AND WEATHERTIGHTNESS. FINISH ALL NEWLY EXPOSED SURFACES TO MATCH EXISTING ADJACENT FINISH.

WALLS

2. BRACE AND SHORE UP EXISTING WALLS TO REMAIN. REMOVE EXISTING DOOR AND FRAME OR WINDOW AND FRAME IN THEIR ENTIRETY, INCLUDING ALL ASSOCIATED APPURTENANCES (CLOSERS, STOPS, BUMPERS, ETC.) PATCH AND REPAIR ALL VOIDS AND DAMAGE CAUSED BY REMOVAL. MATCH EXISTING ADJACENT FINISHES, INCLUDING BRICK, TILE, FLOORING, BASE, ETC. PREPARE OPENING FOR NEW DOOR AND FRAME. INFILL OPENING WITH DOOR & FRAME OR BORROWED LIGHT & FRAME. SEE FLOOR PLAN AND DOOR SCHEDULE.

3. BRACE AND SHORE UP EXISTING CONSTRUCTION TO REMAIN ABOVE NEW OPENING. SAWCUT AND REMOVE EXISTING WALL CONSTRUCTION TO WIDTH INDICATED ON DEMOLITION PLAN AND TO FIRST MASONRY COURSE 8" ABOVE NEW DOOR HEAD HEIGHT. INFILL OPENING WITH NEW DOOR AND FRAME CONSTRUCTION, AND NEW LINTEL OF THICKNESS TO MATCH EXISTING ADJACENT WALL. NEW CMU SHALL BE TOOTHED INTO EXISTING ADJACENT CMU. CONSTRUCT WITH 1 HOUR RATED CONSTRUCTION (UL DES U905 OR U906) AT ALL CORRIDOR WALLS. SEE FLOOR PLAN AND DOOR SCHEDULE. FINISH ALL NEWLY EXPOSED SURFACES AND PATCH AND REPAIR ALL DAMAGE CAUSED BY RENOVATION TO MATCH EXISTING ADJACENT FINISH, INCLUDING BRICK, TILE, BASE, ETC. UNLESS SHOWN OTHERWISE ON PLANS.

4. CLEAN AND PREPARE EXISTING WALLS TO REMAIN TO RECEIVE NEW FINISH WITH THE EXCEPTION OF EXISTING CERAMIC TILE AND/OR BRICK TO REMAIN. SEE ROOM FINISH SCHEDULE FOR NEW FINISH.

5. BRACE AND SHORE UP EXISTING ADJACENT CONSTRUCTION TO REMAIN. SAWCUT AND REMOVE EXISTING WALL CONSTRUCTION INDICATED ON DEMOLITION PLAN IN ITS ENTIRETY, FULL HEIGHT. COORDINATE REMOVAL WITH ALL OTHER TRADES REGARDING REMOVAL OF PIPING, WIRING, ETC. CONTAINED IN EXISTING WALL CONSTRUCTION. SEE FLOOR PLAN FOR RENOVATED CONDITION. FINISH ALL NEWLY EXPOSED SURFACES AND PATCH AND REPAIR ALL VOIDS AND DAMAGE CAUSED BY RENOVATION TO MATCH EXISTING OR NEW ADJACENT MATERIAL(S).

6. ON EXISTING WALLS TO REMAIN, REMOVE WALL FINISH (TILE, PANELING, WALL PAPER, ACOUSTIC PANELS, ETC., **BUT NOT PLASTER**) IN ITS ENTIRETY DOWN TO SUBSTRATE. CLEAN AND PREPARE WALL TO RECEIVE NEW FINISH. SEE ROOM FINISH SCHEDULE FOR NEW FINISH.

7. BRACE AND SHORE UP EXISTING ADJACENT CONSTRUCTION TO REMAIN. REMOVE EXISTING DOOR AND FRAME. SAWCUT AND DEMOLISH EXISTING WALL CONSTRUCTION TO WIDTH INDICATED ON DEMOLITION PLAN AND FROM FLOOR TO FIRST MASONRY COURSE 8" ABOVE NEW OPENING HEAD HEIGHT. INFILL OPENING WITH NEW DOOR, FRAME, WALL CONSTRUCTION AS NECESSARY, AND NEW LINTEL. ALL OF THICKNESS TO MATCH EXISTING ADJACENT WALL. NEW CMU SHALL BE TOOTHED INTO EXISTING ADJACENT CMU. SEE FLOOR PLAN AND DOOR SCHEDULE. PATCH AND REPAIR ALL VOIDS AND DAMAGE CAUSED BY REMOVAL TO MATCH EXISTING ADJACENT FINISH.

7A. BRACE AND SHORE UP EXISTING CONSTRUCTION TO REMAIN ABOVE OPENING. SAWCUT AND REMOVE EXISTING WALL CONSTRUCTION TO WIDTH INDICATED ON DEMOLITION PLAN FOR INSTALLATION OF NEW KITCHEN HOOD EXHAUST DUCT. REMOVE FIRST MASONRY COURSE 8" ABOVE NEW OPENING HEAD HEIGHT. INSTALL NEW GALV. LINTEL OF THICKNESS TO MATCH EXISTING ADJACENT WALL AND WIDTH TO ACCOMMODATE NEW OPENING SIZE. SEE FLOOR PLAN AND WALL SECTION. CONTRACTOR SHALL TAKE ALL NECESSARY STEPS TO ENSURE BUILDING SECURITY AND WEATHERTIGHTNESS. FINISH ALL NEWLY EXPOSED SURFACES AND PATCH AND REPAIR ALL DAMAGE CAUSED BY RENOVATION TO MATCH EXISTING ADJACENT FINISH, INCLUDING TILE, PLASTER, ETC.

8. BRACE AND SHORE UP EXISTING ADJACENT WALL CONSTRUCTION TO REMAIN. SAWCUT AND REMOVE EXISTING WALL TO WIDTH INDICATED ON DEMOLITION PLAN AND FROM 3'-6" ABOVE THE EXISTING FLOOR TO 7'-4" ABOVE EXISTING FLOOR. SEE FLOOR PLAN. PATCH AND REPAIR ALL VOIDS AND DAMAGE CAUSED BY REMOVAL TO MATCH EXISTING ADJACENT FINISH. INFILL OPENING WITH NEW FRAMES, MASONRY CONSTRUCTION AND LINTEL OF THICKNESS TO MATCH EXISTING WALL.

9. SAWCUT AND REMOVE EXISTING LOW WALL CONSTRUCTION TO EXTENT INDICATED ON DEMOLITION PLAN. **NOTE: ALL EXISTING STRUCTURAL COLUMNS SHALL REMAIN.** COORDINATE REMOVAL WITH ALL OTHER TRADES REGARDING REMOVAL OF PIPING, WIRING, ETC. CONTAINED IN EXISTING WALL CONSTRUCTION. SEE FLOOR PLAN FOR RENOVATED CONDITION. PATCH AND REPAIR ALL DAMAGE CAUSED BY RENOVATION. MATCH EXISTING ADJACENT FINISH UNLESS SHOWN OTHERWISE ON PLANS. FINISH ALL NEWLY EXPOSED SURFACES TO MATCH EXISTING ADJACENT CONDITIONS.

FLOORS

10. REMOVE EXISTING BASE. REMOVE FLOOR FINISH DOWN TO CONCRETE SLAB, INCLUDING ALL ADHESIVES. CLEAN, PREPARE & LEVEL EXISTING FLOOR SLAB WITH SELF-LEVELING UNDERLAYMENT (COMPATIBLE WITH NEW FLOOR FINISHES) OVER **ENTIRE SURFACE OF EXISTING FLOOR** TO MAKE FLOOR LEVEL AND FLUSH. INSTALL NEW FLOOR FINISH AND BASE. SEE ROOM FINISH SCHEDULE AND SPECIFICATION SECTION 03450.

11. PATCH AND REPAIR ALL DAMAGE AND/OR FLOOR CAVITY RESULTING FROM DEMOLITION AND REMOVAL OF EXISTING DOOR, FRAME AND HARDWARE. MATCH EXISTING ADJACENT FINISH. SEE ROOM FINISH SCHEDULE.

12. **SAW-CUTTING AND TRENCHING OF EXISTING CONCRETE FLOOR SLAB FOR NEW UNDERGROUND PLUMBING WORK BY PLUMBING TRADE CONTRACTOR. SEE PLUMBING DRAWINGS.** WHEN PLUMBING WORK IS COMPLETE, GENERAL CONTRACTOR TO BACK FILL AND PATCH ALL CONCRETE SLAB TRENCHES. PATCH AND REPAIR ALL VOIDS AND DAMAGE CAUSED BY THE SAW-CUTTING AND TRENCHING. PATCHING OF TRENCHES SHALL BE FLUSH AND SMOOTH WITH ADJACENT CONCRETE SLAB TO REMAIN AND BE OF A SUITABLE SUBSTRATE TO PREPARE FOR THE FLOORING FINISH. SEE PLUMBING DRAWINGS FOR EXTENT OF TRENCHING THAT WILL NEED TO BE PATCHED.

13. DISCONNECTION AND REMOVAL OF EXISTING UNIT VENTILATOR BY HVAC CONTRACTOR. GENERAL CONTRACTOR TO DEMOLISH UNIT VENTILATOR CONCRETE BASE. PATCH AND REPAIR ALL VOIDS AND DAMAGE, ESPECIALLY FLOOR RELATED, RESULTING FROM DEMOLITION AND REMOVAL OF EXISTING UNIT VENTILATOR . CONCRETE BASE AND ASSOCIATED APPURTENANCES. MATCH EXISTING OR NEW ADJACENT FINISHES. SEE ROOM FINISH SCHEDULE.

14. SAWCUT AND DEMOLISH ENTIRE FLOOR SLAB IN ROOM INDICATED. AFTER UNDERGROUND PLUMBING WORK IS COMPLETED BY THE PLUMBING TRADE CONTRACTOR, BACKFILL AS NECESSARY AROUND NEW PLUMBING WORK AND INSTALL NEW CONCRETE FLOOR SLAB WITH DEPRESSION NECESSARY TO ACCOMMODATE NEW FLOOR FINISH. COORDINATE WITH FLOOR PLAN AND ROOM FINISH SCHEDULE. PROVIDE POSITIVE DRAINAGE ON THE NEW SLAB AND NEW FLOOR FINISH AS INDICATED ON THE ROOM LAYOUT. TIE NEW SLAB INTO EXISTING ADJACENT SLABS AND/OR FOUNDATIONS WALLS. REFER TO DETAIL 2/A401.

15. NOT USED
16. NOT USED
17. NOT USED
18. NOT USED
19. NOT USED

CEILINGS

20. REMOVE EXISTING CEILING CONSTRUCTION IN ITS ENTIRETY. PATCH, PLUG AND FILL ALL OPENINGS IN ADJACENT WALL, ETC. TO RESTORE TO A UNIFORM, FLUSH, CONTINUOUS SURFACE TO RECEIVE NEW FINISHES - SEE ROOM FINISH SCHEDULE. PATCH AND REPAIR ALL VOIDS AND DAMAGE CAUSED BY REMOVAL. MATCH EXISTING ADJACENT FINISH. **ALL PLUMBING / HVAC / ELECTRICAL WORK, INCLUDING DEMOLITION, PATCHING AND REPAIR, BY RESPECTIVE TRADE CONTRACTOR. ADDITIONAL DEMOLITION OF EXISTING PLASTER CEILING ABOVE THE EXISTING SUSPENDED CEILING WILL BE REQUIRED FOR INSTALLATION OF NEW SUPPLEMENTAL STRUCTURAL SUPPORT AND HVAC EQUIPMENT - SEE DETAILS ON A401.**

21. DEMOLISH AND REMOVE INDICATED EXISTING SOFFIT IN ITS ENTIRETY, INCLUDING ALL SUB-FRAMING. PATCH AND REPAIR ALL VOIDS AND DAMAGE CAUSED BY REMOVAL TO MATCH EXISTING ADJACENT FINISH.

22. CAREFULLY REMOVE AND STORE EXISTING CEILING SYSTEM AND ALL ASSOCIATED COMPONENTS, TO EXTENT INDICATED ON THE DEMOLITION PLAN, TO FACILITATE NEW HVAC WORK. ALL EXISTING DEVICES (LIGHTS, FIRE ALARM DEVICES, SPEAKERS, ETC.) SHALL BE TEMPORARILY SUPPORTED BY THE ELECTRICAL CONTRACTOR. SEE FIRE ALARM SYSTEM NOTE ON G002. WHEN NEW HVAC WORK IS COMPLETE, REINSTALL EXISTING CEILING SYSTEM IN ORIGINAL CONFIGURATION. ELECTRICAL CONTRACTOR TO REINSTALL ALL CEILING DEVICES. PATCH AND REPAIR ALL DAMAGE AND VOIDS CAUSED BY REMOVAL AND REINSTALLATION. REPLACE ANY CEILING SYSTEM COMPONENTS LOST OR DAMAGED DURING REMOVAL, STORAGE AND/OR REINSTALLATION.

23. CLEAN AND PREPARE EXISTING GYPSUM BOARD/PLASTER CEILING TO REMAIN TO RECEIVE NEW FINISH. SEE ROOM FINISH SCHEDULE FOR NEW FINISH.

24. TO FACILITATE NEW STRUCTURAL WORK, CAREFULLY REMOVE AND STORE EXISTING SUSPENDED CEILING SYSTEM AND ALL ASSOCIATED COMPONENTS, AND CAREFULLY SAWCUT AND REMOVE EXISTING PLASTER CEILING ABOVE SUSPENDED CEILING, TO EXTENT INDICATED ON THE DEMOLITION PLAN. . ALL EXISTING DEVICES (LIGHTS, FIRE ALARM DEVICES, SPEAKERS, ETC.) SHALL BE TEMPORARILY SUPPORTED BY THE ELECTRICAL CONTRACTOR. SEE FIRE ALARM SYSTEM NOTE ON G002. WHEN NEW STRUCTURAL WORK IS COMPLETE, PATCH EXISTING PLASTER CEILING W/ 5/8" TYPE X GYPSUM BOARD. SEE DETAIL 5/A401. REINSTALL EXISTING SUSPENDED CEILING SYSTEM IN ORIGINAL CONFIGURATION. ELECTRICAL CONTRACTOR TO REINSTALL ALL CEILING DEVICES. PATCH AND REPAIR ALL DAMAGE AND VOIDS CAUSED BY REMOVAL AND REINSTALLATION OF CEILINGS. REPLACE ANY CEILING SYSTEM COMPONENTS LOST OR DAMAGED DURING REMOVAL, STORAGE AND/OR REINSTALLATION.

25. AFTER REMOVAL OF SUSPENDED CEILING SYSTEM, CAREFULLY SAWCUT AND PARTIALLY REMOVE EXISTING PLASTER CEILING TO EXTENT NECESSARY TO PERFORM HVAC CONTRACT WORK AND INSTALL NEW HVAC EQUIPMENT. COORDINATE WITH HVAC DRAWINGS AND HVAC TRADE CONTRACTOR. PATCH AND REPAIR ALL VOIDS AND DAMAGE CAUSED BY DEMOLITION AND RENOVATION WORK. SEE DETAIL 3/A401 FOR MORE INFORMATION RELATED TO INTERFACE OF THE NEW KITCHEN HOODS WITH THE NEW AND EXISTING CEILINGS.

26. NOT USED
27. NOT USED
28. NOT USED
29. NOT USED

EQUIPMENT

30. REMOVE EXISTING BASE AND WALL CABINETS, COUNTERS, EQUIPMENT, APPLIANCES, LOCKERS, CURTAINS, TOILET PARTITIONS, MIRRORS, BENCHES, SHELVES, ACOUSTIC WALL PANELS, GUARDRAILS, AND/OR HANDRAILS IN THEIR ENTIRETY. **INTEGRAL SINKS SHALL BE DISCONNECTED AND REMOVED BY THE PLUMBING CONTRACTOR.** SEE GENERAL NOTE. PATCH, PLUG AND FILL ALL OPENINGS IN ADJACENT WALL, FLOOR, ETC. TO RESTORE TO A UNIFORM, FLUSH, CONTINUOUS SURFACE. FINISH ALL NEWLY EXPOSED SURFACES AND PATCH AND REPAIR ALL DAMAGE CAUSED BY REMOVAL TO MATCH EXISTING ADJACENT FINISHES.

31. OWNER REMOVE AND STORE EXISTING INTERACTIVE PROJECTOR SYSTEM AND ALL APPURTENANCES. AFTER RENOVATION IS COMPLETE, OWNER TO RE-INSTALL IN NEW LOCATION AS SHOWN ON ROOM LAYOUTS.

32. REMOVE EXISTING DRYMARKER BOARDS, EXHIBITION BOARDS AND MIRRORS IN THEIR ENTIRETY. IF WALL IS TO REMAIN, PATCH SUBSTRATE UP TO A MAXIMUM DEPTH OF 4" BEHIND REMOVED ITEMS TO PROVIDE A UNIFORM, FLUSH, CONTINUOUS SURFACE TO RECEIVE NEW FINISHES. SEE ROOM FINISH SCHEDULE. WHERE EXISTING BOARDS BEING REMOVED ARE RECESSED IN WALL FACE, INSTALL NEW SUPPORT BLOCKING TO SUPPORT NEW WALL FINISH. PATCH AND REPAIR ALL VOIDS AND DAMAGE CAUSED BY RENOVATION. MATCH EXISTING ADJACENT FINISH.

33. OWNER TO REMOVE AND STORE INDICATED EXISTING LOOSE CABINETS, SHELVES, RACKS, TABLES, CARTS, REFRIGERATORS, ETC. AFTER RENOVATION IS COMPLETE, RE-INSTALL ITEMS IN NEW LOCATION INDICATED ON ROOM LAYOUTS OR DETERMINED IN THE FIELD BY THE OWNER. INSTALL NEW FINISHED FILLERS AND END PANELS AS NECESSARY TO PRODUCE A FINISHED CONDITION.

34. DEMOLISH AND REMOVE EXISTING TACK STRIPS IN THEIR ENTIRETY INCLUDING MECHANICAL FASTENERS. PATCH, PLUG, FILL AND REFINISH ALL OPENINGS LEFT IN WALL AFTER REMOVAL, INCLUDING THOSE FROM TACK STRIPS PREVIOUSLY REMOVED. RESTORE TO A FINISHED LEVEL/PLUMB CONDITION TO MATCH EXISTING ADJACENT SURFACE FINISHES.

35. NOT USED
36. NOT USED
37. NOT USED
38. NOT USED
39. NOT USED

MISCELLANEOUS

40. CAREFULLY DISCONNECT AND REMOVE EXISTING WALL MOUNTED ACCESSORIES (PAPER TOWEL DISPENSERS, SOAP DISPENSERS, FIRE BLANKET CABINETS, FIRE EXTINGUISHERS, ETC.) AND STORE FOR REINSTALLATION IN NEW LOCATION DETERMINED BY THE OWNER. PATCH AND REPAIR ALL VOIDS AND DAMAGE RESULTING FROM REMOVAL TO MATCH EXISTING OR NEW ADJACENT FINISH.

41. DISCONNECT AND REMOVE EXISTING ELECTRIC RANGE. **ALL ELECTRICAL WORK, INCLUDING DISCONNECTING EXISTING RANGE AND CONNECTING NEW RANGE AND OVEN, BY ELECTRICAL TRADE CONTRACTOR. REFER TO ELECTRICAL DRAWINGS.** PATCH AND REPAIR ALL DAMAGE CAUSED BY REMOVAL.

42. DISCONNECT AND REMOVE EXISTING GAS RANGE. **ALL ELECTRICAL AND PLUMBING WORK, INCLUDING DISCONNECTING EXISTING RANGE AND CONNECTING NEW RANGE AND OVEN, BY TRADE CONTRACTOR. REFER TO ELECTRICAL AND PLUMBING DRAWINGS** PATCH AND REPAIR ALL DAMAGE CAUSED BY REMOVAL.

43. DISCONNECT, REMOVE AND STORE EXISTING DRYING MACHINE, INCLUDING VENTING DUCT. PATCH AND REPAIR ALL VOIDS AND DAMAGE CAUSED BY REMOVAL, INCLUDING WALL OR WINDOW PENETRATIONS OF VENTING DUCT. SEE GENERAL NOTE. REPLACE ANY COMPONENTS OF DRYER LOST OR DAMAGED DURING REMOVAL, STORAGE AND/OR REINSTALLATION.

44. DISCONNECT, REMOVE AND STORE EXISTING WASHING MACHINE, INCLUDING PLUMBING CONNECTIONS. **PLUMBING DISCONNECTION AND RECONNECTION WORK BY THE PLUMBING TRADE CONTRACTOR.** PATCH AND REPAIR ALL VOIDS AND DAMAGE CAUSED BY REMOVAL, INCLUDING PLUMBING WALL PENETRATIONS. SEE GENERAL NOTE. REPLACE ANY COMPONENTS OF WASHER LOST OR DAMAGED DURING REMOVAL, STORAGE AND/OR REINSTALLATION.

GENERAL DEMOLITION NOTES:

A. ALL CONTRACTORS ARE ADVISED TO VISIT THE SITE AND VERIFY ALL AREAS AND CONDITIONS PRIOR TO SUBMITTING THEIR BIDS. THE CONTRACTOR MUST NOTIFY THE ARCHITECT OF ANY DISCREPANCIES AND/OR OMISSIONS IN WRITING AT LEAST SEVEN DAYS PRIOR TO THE RECEIPT OF BIDS. FAILURE TO SO NOTIFY THE ARCHITECT INDICATES THAT ANY ADDITIONAL COSTS ASSOCIATED WITH THE DISCREPANCIES AND / OR OMISSIONS ARE INCLUDED IN THE CONTRACTOR'S BID AND THAT NO CHANGE TO THE CONTRACT AMOUNT WILL BE MADE AFTER THE RECEIPT OF BIDS OR THE AWARD OF CONTRACTS.

B. ALL PLUMBING, MECHANICAL OR ELECTRICAL DISCONNECTS SHALL BE MADE BY THE RESPECTIVE TRADES. ALL EQUIPMENT, DEVICES, FIXTURES, ETC., SHALL BE REMOVED FROM THE SITE BY THE RESPECTIVE CONTRACTOR. NOTE: THE EXISTING FIRE ALARM SYSTEM SHALL NOT BE DISABLED UNTIL THE NEW FIRE ALARM DEVICES BE REMOVED UNTIL NEW DEVICES ARE READY FOR SWITCHOVER.

C. UNLESS NOTED OTHERWISE ALL DEMOLITION MATERIAL SHALL BE REMOVED OFF SITE BY THE CONTRACTOR AT NO ADDITIONAL COST TO THE OWNER.

D. THERE ARE SOME SPECIFIC ITEMS DESIGNATED BY THE ARCHITECT FOR SALVAGE. THESE ITEMS ARE INTENDED FOR REUSE IN THE NEW CONSTRUCTION. THE CONTRACTOR MUST TAKE CARE IN THE REMOVAL AND STORAGE OF THESE ITEMS UNTIL THEY ARE NEEDED IN THE NEW CONSTRUCTION.

E. THE CONTRACTOR SHALL MAKE EVERY EFFORT TO PROTECT PORTIONS OF THE EXISTING CONSTRUCTION WHICH ARE ADJACENT TO AREAS TO BE DEMOLISHED. MAKE ALL CUTS AS NEATLY AS POSSIBLE. REFER TO FLOOR PLAN DRAWINGS FOR FINISHING OF THESE AREAS.

F. IF NOT OTHERWISE NOTED OR DETAILED, ALL SURFACES LEFT ROUGH OR UNFINISHED BY DEMOLITION AND WHICH ARE EXPOSED TO VIEW, SHALL BE PATCHED TO MATCH ADJACENT SURFACES AND FINISHED TO PROVIDE A UNIFORM APPEARANCE WITH REGARD TO SIZE, SHAPE, COLOR, TEXTURE AND MATERIAL.

G. THE CONTRACTOR SHALL PROVIDE A PHYSICAL BARRIER TO CONTAIN DUST AND DIRT AROUND THE DEMOLITION AREA AND SHALL MAKE EVERY EFFORT TO KEEP THE DEMOLITION SITE AND SURROUNDING AREAS AS CLEAN AS POSSIBLE. ALL TEMPORARY PARTITIONS SHALL BE 1 HOUR RATED CONSTRUCTION AND INCLUDE A DOOR.

H. NO DEMOLITION SHALL BEGIN UNTIL PROPER PROTECTION IS IN PLACE AND APPROVED BY ARCHITECT & OWNER TO ENSURE THE SAFETY OF THE PUBLIC, THE BUILDING OCCUPANTS, CONSTRUCTION WORKERS AND TO CONTAIN DUST AND DIRT WITHIN THE AREA OF DEMOLITION.

I. THE CONTRACTOR SHALL COMPLY WITH ALL FEDERAL, STATE AND LOCAL LAWS REGARDING THE REMOVAL AND DISPOSAL OF ALL MATERIALS & EQUIPMENT.

J. THE CONTRACTOR SHALL PROVIDE PROTECTION AGAINST INCLEMENT WEATHER FOR THE EXISTING BUILDING DURING THE INTERIM PERIOD BETWEEN DEMOLITION AND THE COMPLETION OF NEW CONSTRUCTION.

K. THE CONTRACTORS SHALL TAKE INTO ACCOUNT THEIR METHODS OF CONSTRUCTION FOR THE NEW WORK INCLUDED IN THEIR BID THE COST OF ADDITIONAL DEMOLITION WORK NECESSARY TO FACILITATE THE CONSTRUCTION. THIS WORK INCLUDES, BUT IS NOT LIMITED TO PARTIAL DEMOLITION OF WALLS AT THE POINTS WHERE NEW STEEL CONNECTS TO EXISTING BEAMS OR COLUMNS, THE AREA AROUND JOINTS BETWEEN NEW AND EXISTING CONSTRUCTION IN WALLS, FLOORS AND CEILINGS, AREAS OF SIDEWALK AND PAVING, ETC. MUCH OF THIS WORK IS INDICATED IN SECTIONS AND DETAILS RELATING TO THE NEW CONSTRUCTION.

L. THE DEMOLITION WORK SHOWN ON THIS PLAN IS INTENDED TO BE A GENERAL OVERVIEW OF MAJOR DEMOLITION WORK REQUIRED. IT IS NOT A COMPLETE AND EXCLUSIVE REPRESENTATION OF ALL DEMOLITION WORK NEEDED FOR EXECUTION OF THE PROJECT. WHEN PREPARING THEIR BIDS, CONTRACTORS MUST REFER TO THE FULL SET OF CONSTRUCTION DOCUMENTS FOR VARIOUS MISCELLANEOUS ITEMS WHICH MUST BE REMOVED AND/OR RELOCATED AS PART OF THE WORK.

M. ALL PRIME CONTRACTORS ARE RESPONSIBLE FOR THEIR OWN CUTTING AND PATCHING - SEE SPECIFICATION.

N. THE CONTRACTOR SHALL INSPECT ALL EXISTING ROOF DRAIN PIPING AND CONNECTIONS IN THE WORK AREA TO DETERMINE THAT PROPER 'LEAK-PROOF' CONNECTIONS EXIST. IF ANY LEAKS EXIST (E.G.,DAMAGED PIPES, INSULATION, CLOGS, ETC.), THEN THE CONTRACTOR SHALL CORRECT ANY AND ALL DEFICIENCIES THAT MAY EXIST.

O. IN ROOMS WHERE EXISTING FLOOR FINISH AND BASE ARE INDICATED TO BE REMOVED. IF ASBESTOS TILE IS ENCOUNTERED, STOP REMOVAL AND NOTIFY OWNER IMMEDIATELY. ASBESTOS TILE SHALL BE REMOVED DOWN TO THE EXISTING CONCRETE SLAB AND THE SURFACE PREPARED FOR NEW FINISH BY OTHERS PRIOR TO CONTINUING WITH RENOVATION WORK. AFTER ASBESTOS ABATEMENT, THE GENERAL CONTRACTOR SHALL CLEAN SLAB TO REMOVE ADHESIVES AND INFILL WITH SELF-LEVELING UNDERLAYMENT (COMPATIBLE WITH NEW FLOOR FINISHES) OVER ENTIRE SURFACE OF EXISTING FLOOR TO MAKE FLOOR LEVEL AND FLUSH. APPLY NEW FINISH AND BASE - SEE ROOM FINISH SCHEDULE.

CONSTRUCTION NOTES:

INDICATED BY: (X)

1. FULL HEIGHT 6" METAL STUD WALL WITH GYPSUM BOARD SHEATHING ON ROOM SIDE OF THE WALL PAINTED. FINISHED GYPSUM BOARD SURFACE SHALL BE FLUSH WITH EXISTING SLOPED SILL LOW ON THE WALL. STAINLESS STEEL WALL PANEL SYSTEM ON GYPSUM BOARD AND EXISTING LOW SILL. FULL HEIGHT. SEE SPEC.
2. PARTIAL HEIGHT 6" METAL STUD WALL WITH VINYL COATED GYPSUM BOARD SHEATHING ON ROOM SIDE OF WALL, PAINTED. ALTERNATE BID: ADD FRP WALL PANEL FINISH. SEE SPEC. NEW WALL SHALL TERMINATE JUST BELOW WINDOW SILL AND HAVE A SOLID SURFACE CAP. COLOR OF SOLID SURFACE SELECTED BY ARCHITECT.
3. PARTIAL HEIGHT 3-5/8" METAL STUD WALL WITH VINYL COATED GYPSUM BOARD SHEATHING ON ROOM SIDE OF WALL. ALTERNATE BID: ADD FRP WALL PANEL FINISH. SEE SPEC. NEW WALL SHALL TERMINATE JUST BELOW WINDOW SILL AND HAVE A SOLID SURFACE CAP.
4. FULL HEIGHT 3-5/8" METAL STUD WALL WITH VINYL COATED GYPSUM BOARD SHEATHING ON ROOM SIDE OF WALL. ALTERNATE BID: ADD FRP WALL PANEL FINISH. SEE SPEC.
5. EXISTING WINDOW INFILL: NEW CMU WITH NEW 3" WATER-MANAGED EIFS SYSTEM ON THE EXTERIOR SIDE. THICKNESS OF NEW CMU SHALL BE BASED ON ACHIEVING A 1" INSET REVEAL OF THE NEW EIFS TO THE EXISTING ADJACENT EIFS. INTERIOR FACE OF NEW CMU SHALL BE FLUSH WITH THE EXISTING ADJACENT WALL SURFACE. COLOR AND TEXTURE OF NEW EIFS SELECTED BY ARCHITECT.
6. PROVIDE POSITIVE ATTACHMENT OF DUCTWORK SUPPORT TO EXISTING BUILDING'S EXTERIOR CONCRETE BACK-UP WALL. SEE DETAIL 6/A401. COORDINATE WIDTH OF NEW DUCTWORK WITH HVAC CONTRACTOR SO THAT CONNECTIONS TO THE EXISTING BUILDING OCCUR BETWEEN THE EXISTING WINDOWS FOR THE ENTIRE HEIGHT OF THE DUCTWORK.
7. PROVIDE STAINLESS STEEL WALL PANEL SYSTEM ON WALL BEHIND KITCHEN EQUIPMENT / KITCHEN HOOD FOR ENTIRE LENGTH SHOWN AND FULL HEIGHT. SEE FLOOR PLAN.
8. PROVIDE HANGING SUPPORT FOR NEW ABOVE CEILING HVAC UNIT, AT A MINIMUM OF FOUR (4) HANGING POINTS. COORDINATE SPACING AND LOCATION WITH HVAC DRAWINGS AND HVAC TRADE CONTRACTOR. SEE DETAIL 4/A401 FOR HANGING ATTACHMENT METHOD TO EXISTING STRUCTURE ABOVE.

DOOR AND FRAME SCHEDULE

NO	LOCATION	DOOR/WINDOW SIZE	TYPE	MATL	GLAZING	FRAME TYPE	FRAME MATL	FRAME DETAIL HEAD	DETAIL JAMB	DETAIL SADDLE	HARDWARE SET	RATING	SIGN TYPE	NOTES
110A	DISH WASH ROOM 110A	3'-0" x 6'-8"	–	–	–	F1	HM	H1 (SIM)	J1 (SIM)	S5	–	–	8	SEE DOOR SCHEDULE NOTES # 1,3,5 & 7
110B	DISH WASH ROOM 110A	3'-0" x 7'-0"	–	–	–	F1	HM	H1 (SIM)	J1 (SIM)	S5	–	–	8	SEE DOOR SCHEDULE NOTES # 1,3,5 & 7
110C	CULINARY ARTS CLASSROOM 110	3'-0" x 7'-0"	A	WD	FIRG-1 / SWF	F1	HM	H1	J1	S4	1.0	20 MIN.	10	SEE DOOR SCHEDULE NOTES # 1,3,5 & 8
110D	CULINARY ARTS CLASSROOM 110	3'-0" x 7'-0"	A	WD	FIRG-1 / SWF	F1	HM	H1	J1	S4	1.0	20 MIN.	10	SEE DOOR SCHEDULE NOTES # 1,3,5 & 7
110E	CULINARY ARTS CLASSROOM 110	3'-0" x 6'-8"	B	WD	–	F1	HM	H1	J1	S3	2.0	–	8	SEE DOOR SCHEDULE NOTES # 1,3,5 & 7
110F	CULINARY ARTS CLASSROOM 110	3'-0" x 6'-8"	B	WD	–	F1	HM	H1	J1	S3	2.0	–	8	SEE DOOR SCHEDULE NOTES # 1,3,5 & 7
111	EXG.CLASSROOM –	3'-0" x 6'-8"	A	WD	FIRG-1 / SWF	F1	HM	H3	J1	S1	1.0	20 MIN.	10	SEE DOOR SCHEDULE NOTES # 1,2,5,6 & 7
W1	CULINARY ARTS CLASSROOM 110	1'-4"	–	–	1/4" TPG	W1	HM	H1	J2	S2	–	–	–	SEE DOOR SCHEDULE NOTES # 4
W2	DISH WASH ROOM 110A	1'-4"	–	–	1/4" TPG	W2	HM	H2	J2	S2	–	–	–	SEE DOOR SCHEDULE NOTES # 4

GENERAL DOOR NOTES

1. ALL DOORS ARE 1 3/4" THICK UNLESS OTHERWISE NOTED.
2. SCRAPE, CLEAN, PRIME AND PAINT ALL EXISTING FRAMES LISTED ON DOOR SCHEDULE.
3. FOR EXISTING OPENINGS - CONTRACTOR TO VERIFY DOOR DIMENSIONS IN FIELD.
4. SEE SPECIFICATIONS FOR ADDITIONAL INFORMATION ON MATERIALS/ MANUFACTURER/PERFORMANCE AND WARRANTY INFORMATION.
5. ALL OCCUPIED ROOMS TO HAVE A PB INTRUDER CYLINDRICAL LOCKSET.

DOOR SCHEDULE NOTES

1. PREP NEW FRAME AND DOOR IN EXISTING MASONRY OPENING. VERIFY OPENING DIMENSIONS IN FIELD. INSTALL NEW FRAME IN SAME LOCATION AS EXISTING. PATCH, PLUG AND FILL ALL OPENINGS IN FRAME, DOOR, ADJACENT WALL ETC. DUE TO DEMOLITION OR NEW CONSTRUCTION TO RESTORE TO A FINISHED LEVEL CONDITION. PUNCH OUT FRAME TO ACCOMMODATE 1" THROW OF LATCH BOLT.
2. MATCH EXISTING DOOR HEIGHT AND WIDEN DOOR FRAME.
3. MATCH EXISTING DOOR SIZE (HEIGHT & WIDTH).
4. BORROWED LIGHT FRAME.
5. KNOCKDOWN FRAME.
6. PROVIDE SECURITY WINDOW FILM (SWF) AT MINIMUM OF 21 MILS THICK ON CLASSROOM SIDE OF THE GLAZING UNDER BASE BID. SEE SPECIFICATION.
7. DOOR DIMENSION APPROXIMATE. VERIFY IN FIELD.

SIGN TYPE 8
TEXT FONT: HELVETICA 3/4"
BRAILLE: 1/4"
CORNERS: 3/8" RADIUS

SIGN TYPE 10
TEXT FONT: HELVETICA 1"
BRAILLE: 1/4"
CORNERS: 3/8" RADIUS

SIGNAGE TYPES

1-1/2" = 1'-0"

ABBREVIATIONS

ETR	- EXISTING TO REMAIN
FRIG

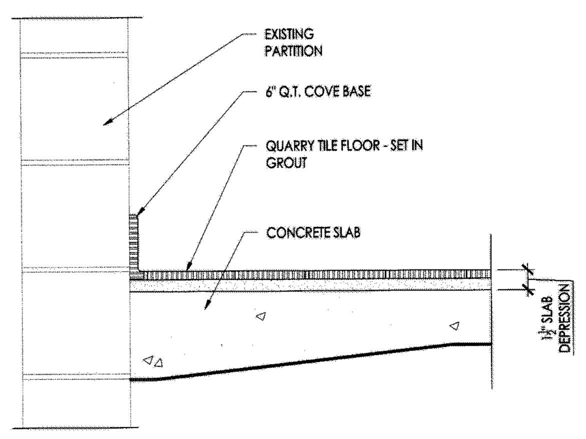

1 QUARRY TILE FLOORING AND BASE DETAIL
1 1/2" = 1' =0"

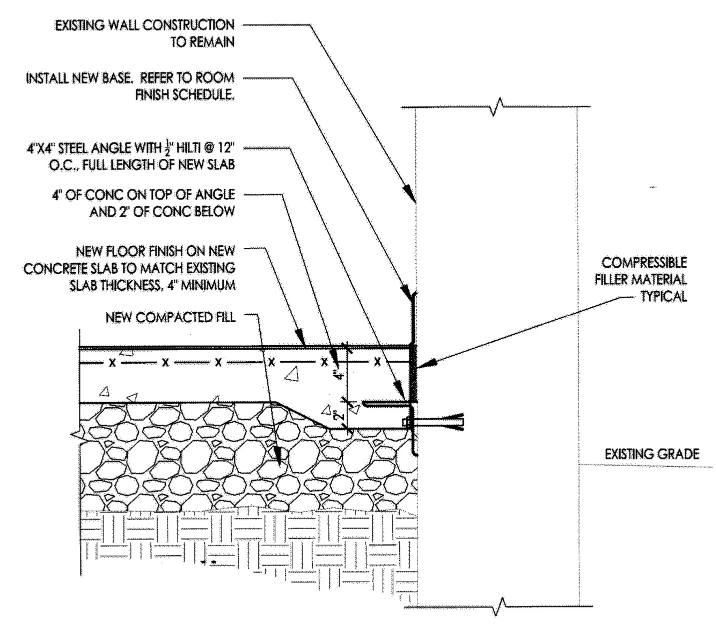

2 DETAIL - SLAB REPAIR
1 1/2" = 1' - 0"

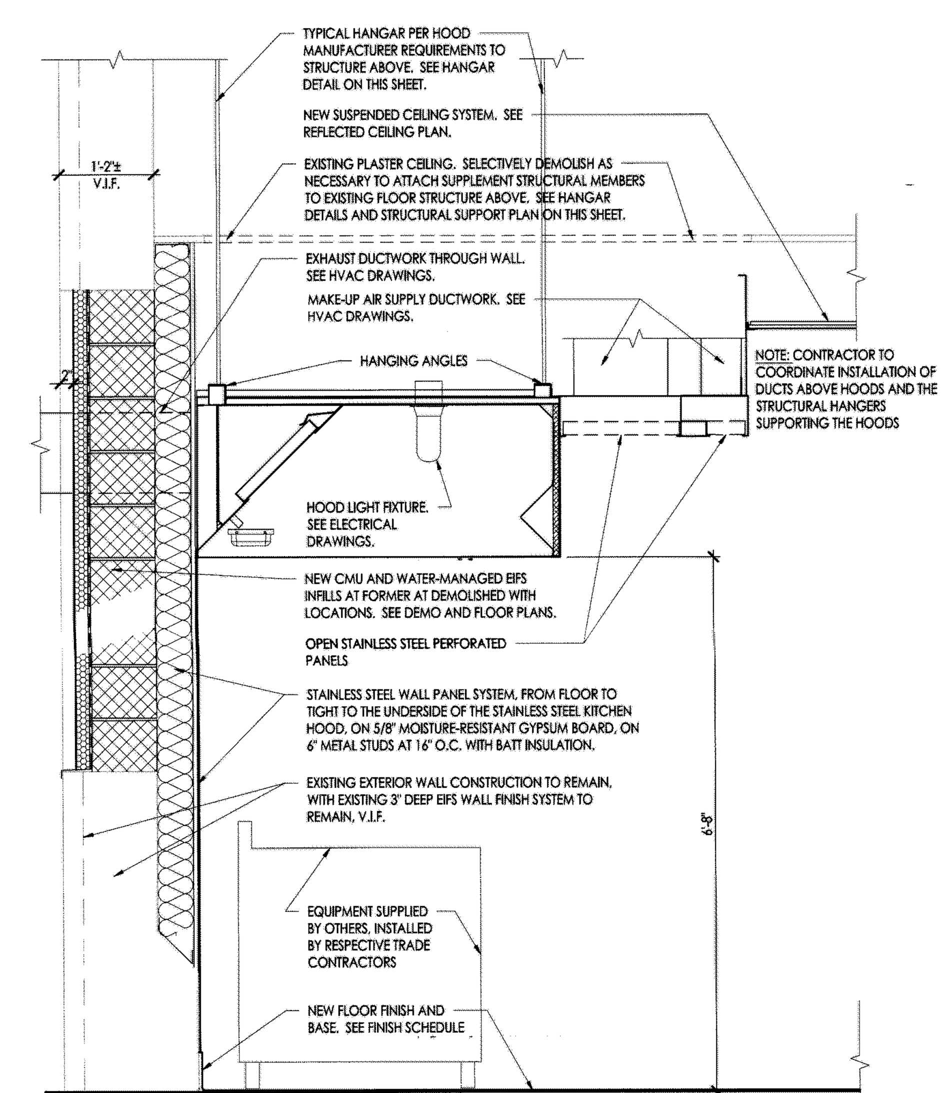

3 WALL SECTION AT NEW KITCH HOOD
3/4" = 1' - 0"

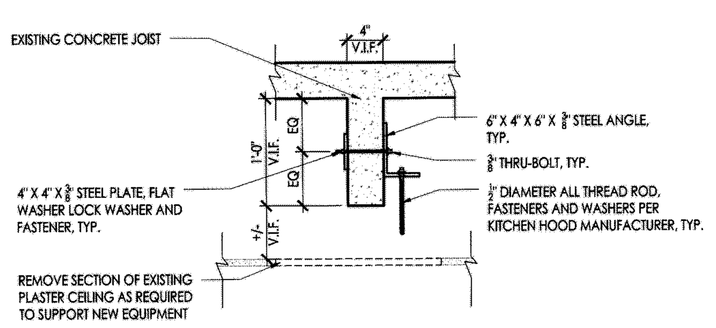

4 TYPICAL HANGER DETAIL
1" = 1'-0"

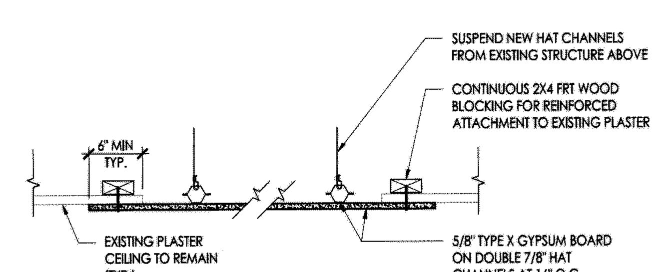

5 PLASTER CEILING PATCHING DETAIL
1" = 1'-0"

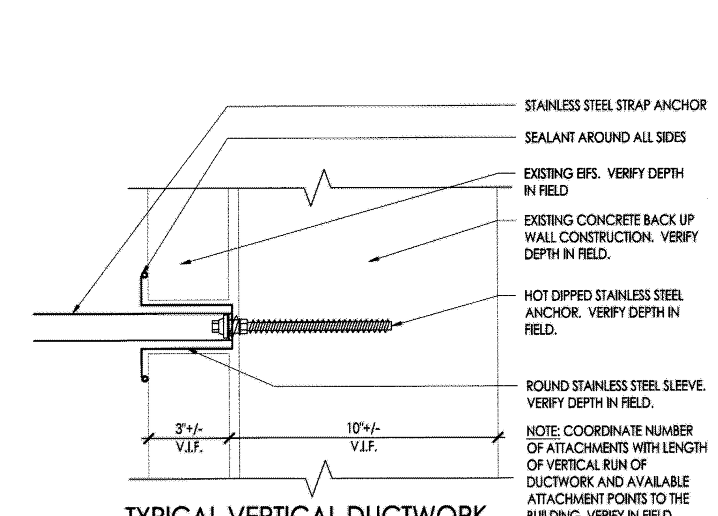

6 TYPICAL VERTICAL DUCTWORK SUPPORT ATTACHMENT DETAIL
3" = 1'-0"

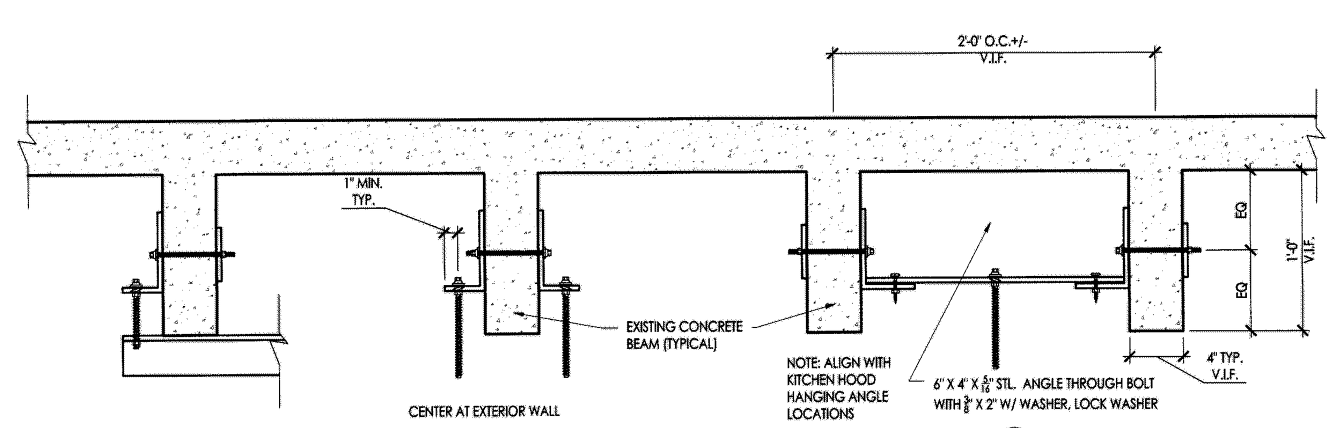

7 ALTERNATE STEEL CLIP ANGLE
1-1/2" = 1'-0"

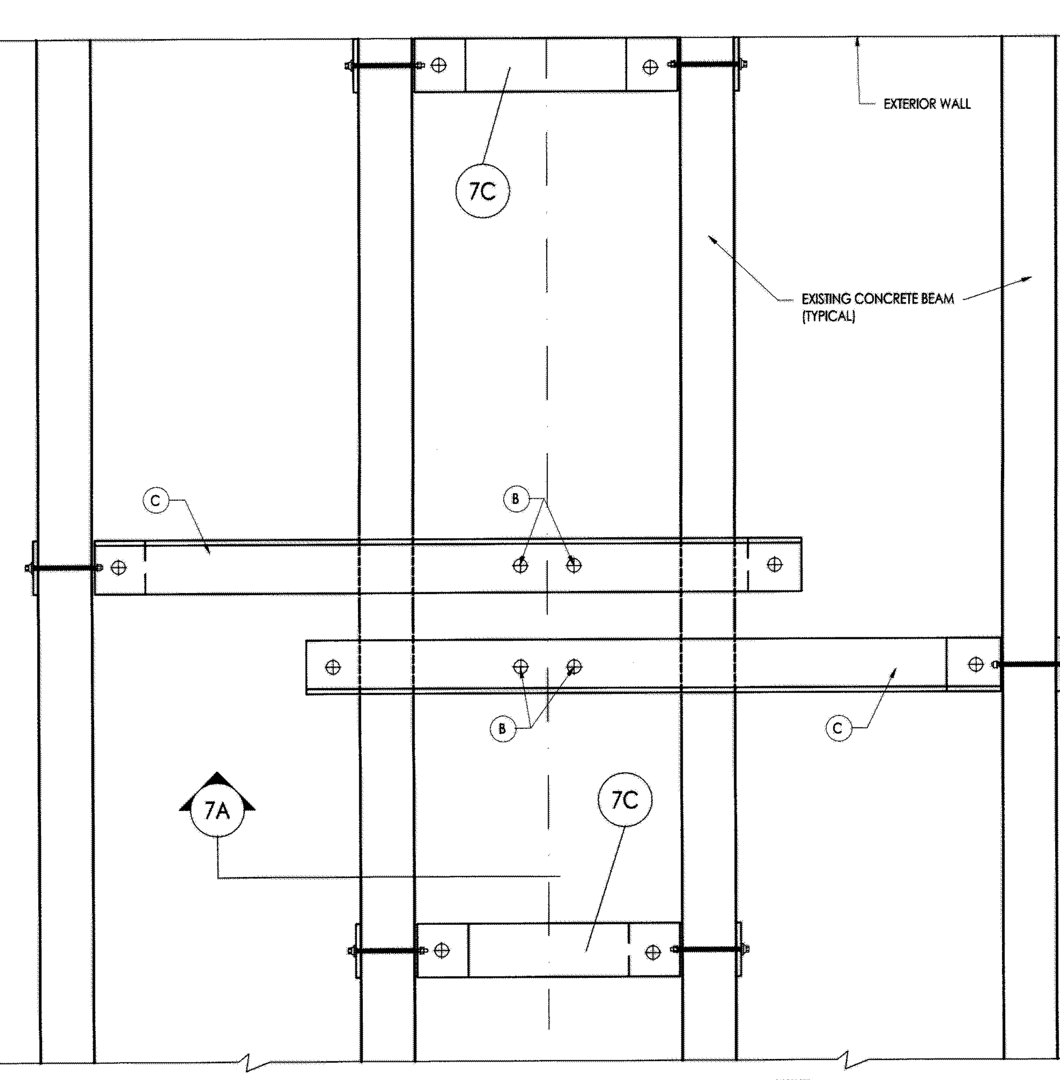

8 PARTIAL REFLECTED UNDER SIDE OF CONCRETE JOISTS (ABOVE PLASTER)
3/4" = 1' - 0"

NOTES :
- (A) CONFIRM WITH KITCHEN HOOD MFG APPROVED SHOP DRAWINGS
- (B) KITCHEN HOOD ALL THREAD ROD SUPPORTS
- (C) 6 X 4" X ⅜" STEEL SUPPORT ANGLE AT UNDERSIDE OF CONCRETE JOISTS. BOLT TO CLIP ANGLE WITH ½" X 6" HHCS WASHER, LOCK WASHER AND NUT.

EQUIPMENT SCHEDULE

INDICATED ON THE PLAN BY THIS SYMBOL: ⬡

* NOTE: ITEMS LISTED BELOW REPRESENT THE BASIS-OF-DESIGN EQUIPMENT FOR THIS PROJECT PURCHASED UNDER SEPARATE OWNER CONTRACT, BUT INSTALLED UNDER THE VARIOUS APPLICABLE TRADE CONTRACTS FOR THIS PROJECT, U.N.O.

ITEM NO.	MANUFACTURER	MODEL NO.	DESCRIPTION	WIDTH	DEPTH	HEIGHT	REMARKS
1	PITCO	35C+S	FRYER, GAS	15⅛"	30 9/32"	46"	FLOOR MODEL, 35-40 LB. OIL CAPACITY, MILLIVOLT CONTROL, STAINLESS STEEL TANK, DOOR & FRONT, 90,000 BTU, CSA, NSF, CE
2	SOUTHBEND	S24E	4 BURNER RANGE	24"	34"	58"	GAS, 24", (4) 28,000 BTU OPEN BURNERS, (1) SPACE SAVER OVEN, SNAP ACTION THERMOSTAT, REMOVABLE CAST IRON GRATE TOPS & CRUMB DRAWER, INCLUDES (1) RACK, STAINLESS STEEL FRONT, SIDES, REMOVABLE SHELF & FRONT RAIL &" ADJUSTABLE LEGS, 147,000 BTU, CSA, NSF
3	SOUTHBEND	S36D	6 BURNER RANGE	36"	34"	58"	S-SERIES RESTAURANT RANGE, GAS, 36", (6) 28,000 BTU OPEN BURNERS, (1) STANDARD OVEN, SNAP ACTION THERMOSTAT, REMOVABLE CAST IRON GRATE TOPS & CRUMB DRAWER, HINGED LOWER VALVE PANEL, INCLUDES (1) RACK, STAINLESS STEEL FRONT, SIDES, SHELF, 4" FRONT RAIL & 6" ADJUSTABLE LEGS, 203,000 BTU, CSA, NSF
4	STAR	636TF	FLAT TOP GRIDDLE	36"	27"	16"	(QUICK-SHIP) STAR-MAX® HEAVY DUTY GRIDDLE, GAS, COUNTERTOP, 36" W X 21" D COOKING SURFACE, 1" THICK POLISHED STEEL GRIDDLE PLATE, EMBEDDED MODULATING THERMOSTAT EVERY 12", HEAVY DUTY KNOB, WRAP-AROUND STAINLESS STEEL SPLASH GUARD, GREASE TROUGH & STAINLESS STEEL DRAWERS, WELDED STEEL FRAME WITH STAINLESS STEEL FRONT, 4" LEGS, 84,900 BTU, cULus, UL EPH CLASSIFIED, MADE IN USA, (SHIPS NATURAL GAS INCLUDES LP CONVERSION KIT)
5	KROWNE METAL	HS-33	HAND WASH STATION	23"	19½"	10"	WALL MOUNT, 16"W X 15"D X 24"H, 6" DEEP BOWL, 4" OC SPLASH MOUNT FAUCET WITH SWING SPOUT (LOW LEAD COMPLIANT), 7-3/4" SIDE SPLASHES ON LEFT & RIGHT, SOAP & TOWEL DISPENSER, STAINLESS STEEL SKIRT ON FRONT & SIDES, 1-1/2" DRAIN WITH REAR OVERFLOW & PTRAP, MOUNTING BRACKET INCLUDED, STAINLESS STEEL CONSTRUCTION
6	STAR	6136RCBF	GRILL (CHARBROILER)	36"	26 13/16"	41 5/16"	STAR-MAX®, GAS, COUNTERTOP, CAST IRON 40,000 BTU BURNERS WITH ADJUSTABLE MANUAL CONTROLS EVERY 12", HEAVY STAINLESS STEEL RADIANTS, WELDED STEEL FRAME WITH STAINLESS STEEL TOP AND FRONT, ALUMINIZED STEEL SIDES, CAST IRON BROILING GRATES, STAINLESS STEEL WATER PAN, SPLASH GUARD & GREASE TROUGH, 4" LEGS, 120,000 BTU, cULus, UL EPH (SHIPS NATURAL GAS INCLUDES LP CONVERSION KIT)
7	EAGLE	2460E74-X	WIRE SHELVING UNIT	60"	24"	74"	RED-i-PAK® SHELVING UNIT, 4-TIER, WIRE SHELVES WITH PATENTED QUADTRUSS® DESIGN, (4) 74"H 2-PIECE POSTS, TAPERED SPLIT SLEEVES, EAGLEgard® HYBRID EPOXY FINISH WITH MICROGARD® ANTIMICROBIAL PROTECTION, PACKAGED IN (1) BOX, NSF (FLYER)
8	JOHN BOOS	EFT8-3015SSK-X	TABLE w/ SHELVING	15"	30"	36-1/4"	FILLER TABLE, 18/430 STAINLESS STEEL TOP WITH 1-1/2" BACKSPLASH, STALLION SAFETY EDGE FRONT, 90° TURNDOWN ON SIDES, STAINLESS STEEL LEGS & ADJUSTABLE UNDERSHELF, PLASTIC BULLET FEET, NSF, KD
9	JOHN BOOS	ST6R5-3024SSK-X	TABLE w/ SHELVING	24"	30"	36-1/4"	16/300 STAINLESS STEEL TOP WITH 5" BACKSPLASH, WITH STALLION SAFETY EDGE FRONT, 90° TURNDOWN ON SIDES, STAINLESS STEEL LEGS & ADJUSTABLE UNDERSHELF, ADJUSTABLE BULLET FEET, NSF, CSA-SANITATION, KD
10	JOHN BOOS	ST6-3060SSK-X	STUDENT WORK TABLE	60"	30"	35-3/4"	16/300 STAINLESS STEEL FLAT TOP, WITH STALLION SAFETY EDGE FRONT & BACK, 90° TURNDOWN ON SIDES, STAINLESS STEEL LEGS & ADJUSTABLE UNDERSHELF, ADJUSTABLE BULLET FEET, NSF, CSA-SANITATION, KD
11	JOHN BOOS	EPT6R5-3060SSK-L-X	TEACHER DEMO STATION w/ SINK & BASE	60"	30"	40-3/4"	(1) 16"W x 20" FRONT-TO-BACK x 12" DEEP SINK BOWL ON RIGHT, 5"H BACKSPLASH, INCLUDES 10" SWING SPOUT FAUCET 4" O.C., 16/300 STAINLESS STEEL TOP, STAINLESS STEEL LEGS & ADJUSTABLE UNDERSHELF, 1" STAINLESS STEEL ADJUSTABLE BULLET FEET, NSF, CSA-SANITATION, KD
12	JOHN BOOS	ST6-30120SSK-X	FOOD PREP TABLE w/ OPEN BOTTOM SHELF	120"	30"	35-3/4"	16/300 STAINLESS STEEL FLAT TOP, WITH STALLION SAFETY EDGE FRONT & BACK, 90° TURNDOWN ON SIDES, STAINLESS STEEL LEGS & ADJUSTABLE UNDERSHELF, ADJUSTABLE BULLET FEET, NSF, CSA-SANITATION, KD
13	–	–	–	–	–	–	NOT USED
14	JOHN BOOS	ST6-3096SSK-X	TABLE w/ SHELVING	96"	30"	35-3/4"	16/300 STAINLESS STEEL FLAT TOP, WITH STALLION SAFETY EDGE FRONT & BACK, 90° TURNDOWN ON SIDES, STAINLESS STEEL LEGS & ADJUSTABLE UNDERSHELF, ADJUSTABLE BULLET FEET, NSF, CSA-SANITATION, KD
15	–	–	FILING CABINET	*	*	*	* EXISTING TO BE RELOCATED
16	–	–	EXISTING CABINET	*	*	*	* EXISTING TO BE RELOCATED
17	–	–	EXISTING REFRIGERATOR	*	*	*	* EXISTING TO BE RELOCATED
18	JOHN BOOS	JDTS-20-60L-X	SOILED FEED DISHTABLE TABLE w/ LIP	60"	30"	44"	STRAIGHT DESIGN, FOR LEFT-TO-RIGHT OPERATION, (1) 20"W x 20" FRON-TO-BACK x 8" DEEP PRE-RINSE SINK, 10" BOXED BACKSPLASH WITH 45° TOP & 2" RETURN, (1) SET OF SPLASH MOUNT FAUCET HOLES WITH 8" CENTERS, ROLLED FRONT & SIDE RIMS, 16/300 STAINLESS STEEL TOP, STAINLESS STEEL LEGS, ADJUSTABLE BRACING, & BULLET FEET, NSF, CSA-SANITATION
19	AMERICAN DISH SERVICE	AFC-3D-S	DISH WASHING MACHINE	33-1/2"	34-1/4"	81"	DOOR TYPE, LOW TEMP CHEMICAL SANITIZING, CORNER DESIGN, CONVERTIBLE TO STRAIGHT-THRU, (37) RACKS/HOUR, 1-1/2 HP PUMP, 20-1/2" DOOR OPENING, AUTO START, AIR-GAP FILL, BUILT-IN CHEMICAL DISPENSING, BUILT-IN SCRAP ACCUMULATOR; 115V/60/1-PH, STANDARD
20	JOHN BOOS	DT3B18244-2D24R-X	DISH TABLE / POT SINKS / CLEAN TABLE	103-5/8"	30-3/8"	44-1/16"	STRAIGHT DESIGN, (3) 18"W X 24" FRONT-TO-BACK X 14" DEEP COMPARTMENTS, (2) 24" DRAINBOARDS, DISH MACHINE ATTACHMENT ON LEFT SIDE, 10"H BOXED BACKSPLASH, (1) SET OF SPLASH MOUNT FAUCET HOLES WITH 8" CENTERS, (3) RACK SLIDES WITH STORAGE BRACKET, 16/300 STAINLESS STEEL CONSTRUCTION, STAINLESS STEEL LEGS, BRACING, & ADJUSTABLE BULLET FEET, NSF, CSA-SANITATION
21	KROWNE (ROYAL SERIES)	17-109WL / PRW23-X	POT SINKS / POT RACKS *	*	*	*	* PRE-RINSE ASSEMBLY, WITH ADD-ON FAUCET, WALL MOUNT, 8" CENTERS, SPRING ACTION FLEXIBLE GOOSENECK, 38"H STAINLESS STEEL HOSE WITH 15" OVERHANG & 1.2 GPM SPRAY HEAD, BUILT IN CHECK VALVES, 2.0 GPM ADD-ON FAUCET WITH 12" SWING SPOUT, QUARTER-TURN CERAMIC CARTRIDGE VALVES, INCLUDES WALL BRACKET & MOUNTING KIT, CHROME PLATED BRASS BASE, LOW LEAD COMPLIANT, INCLUDES INTERNAL CHECK VALVES TO PREVENT BACKFLOW AND CROSS CONTAMINATION, NSF; 1 YEAR PARTS & LABOR WARRANTY, STANDARD; PRW23-X POT RACK, WALL MOUNT, DOUBLE BAR, 72"Wx 12"D x 16"H OVERALL SIZE, 3/16" x 2" STAINLESS STEEL FLAT BAR, INCLUDES (12) STAINLESS STEEL DOUBLE HOOKS, NSF, CSA-SANITATION
22	–	–	DRYING MACHINE	*	*	*	* EXISTING TO BE RELOCATED
23	–	–	WASHING MACHINE	*	*	*	* EXISTING TO BE RELOCATED
24	TURBO AIR	M3F72-3-N	REACH-IN FREEZER	77-3/4"	32-3/4"	83"	M3 FREEZER, 3-SECTION, 65.8 CU. FT., EXTERIOR LED DIGITAL THERMOMETER, DOOR OPEN BEEP, SELF-DIAGNOSTIC MONITORING SYSTEM, HOT GAS CONDENSATE SYSTEM, SMART FUZZY DEFROST, AUTOMATIC FAN MOTOR DELAYS, DOOR PRESSURE RELEASE, LED INTERIOR LIGHTING, SELF-CLEANING CONDENSER DEVICE, (3) HINGED SOLID DOORS WITH RECESSED HANDLE & LOCKS, (9) PE COATED WIRE SHELVES, STAINLESS STEEL FRONT & SIDES (GALVANIZED STEEL TOP, BOTTOM & BACK), ALUMINUM INTERIOR WITH STAINLESS STEEL FLOOR, TOP MOUNT SELF-CONTAINED COMPRESSOR, R290 HYDROCARBON REFRIGERANT, 3/4 HP, 115V/60/1-PH, 7.9 AMPS, NEMA 5-15P, ETL-SANITATION, CETLUS, ENERGY STAR®; 3 YEAR PARTS & LABOR WARRANTY, STANDARD; ADDITIONAL 2-YEAR COMPRESSOR WARRANTY (5 YEAR TOTAL), STANDARD; SELF-CLEANING CONDENSER DEVICE EQUIPPED, STANDARD; LEFT DOOR HINGED LEFT, CENTER & RIGHT DOOR HINGED RIGHT, STANDARD
25	–	–	–	–	–	–	NOT USED
26	EAGLE GROUP	2436E74-X	WIRE SHELVING UNIT	36"	24"	74"	RED-i-PAK® SHELVING UNIT, 4-TIER, WIRE SHELVES WITH PATENTED QUADTRUSS® DESIGN, (4) 74"H 2-PIECE POSTS, TAPERED SPLIT SLEEVES, EAGLEgard® HYBRID EPOXY FINISH WITH MICROGARD® ANTIMICROBIAL PROTECTION, PACKAGED IN (1) BOX, NSF (FLYER)
27	CAMBRO	DCS1125110	DISH CART / DOLLY	27"	30-1/2"	31-3/4"	VERSA DISH CADDY, HOLDS UP TO 11-1/4" ROUND PLATES OR UP TO 9-1/2" SQUARE PLATES, HOLDS (4) COLUMNS, NON-ADJUSTABLE, VINYL COVER, (2) 5" SWIVEL CASTERS WITH BRAKES & (2) 10" REAR WHEELS, POLYETHYLENE, BLACK, NSF
32	CAMPBELL RHEA		BASE CABINET W/ DOUBLE SOLID DOORS	36"	24"	35-1/4"'	PROVIDE 1" THICK PLASTIC LAMINATE COUNTERTOP WITH 4" HIGH BACKSPLASH AT BACK AND LEFT SIDE. COLOR SELECTED BY ARCHITECT. **THIS ITEM IS FURNISHED AND INSTALLED BY THE GENERAL CONTRACTOR.
33	CAMPBELL RHEA		WALL CABINET W/ DOUBLE SOLID DOORS	36"	12"	23-1/2"	**THIS ITEM IS FURNISHED AND INSTALLED BY THE GENERAL CONTRACTOR
34	N/A	N/A	EXISTING LOOSE FURNITURE TOP REMAIN				

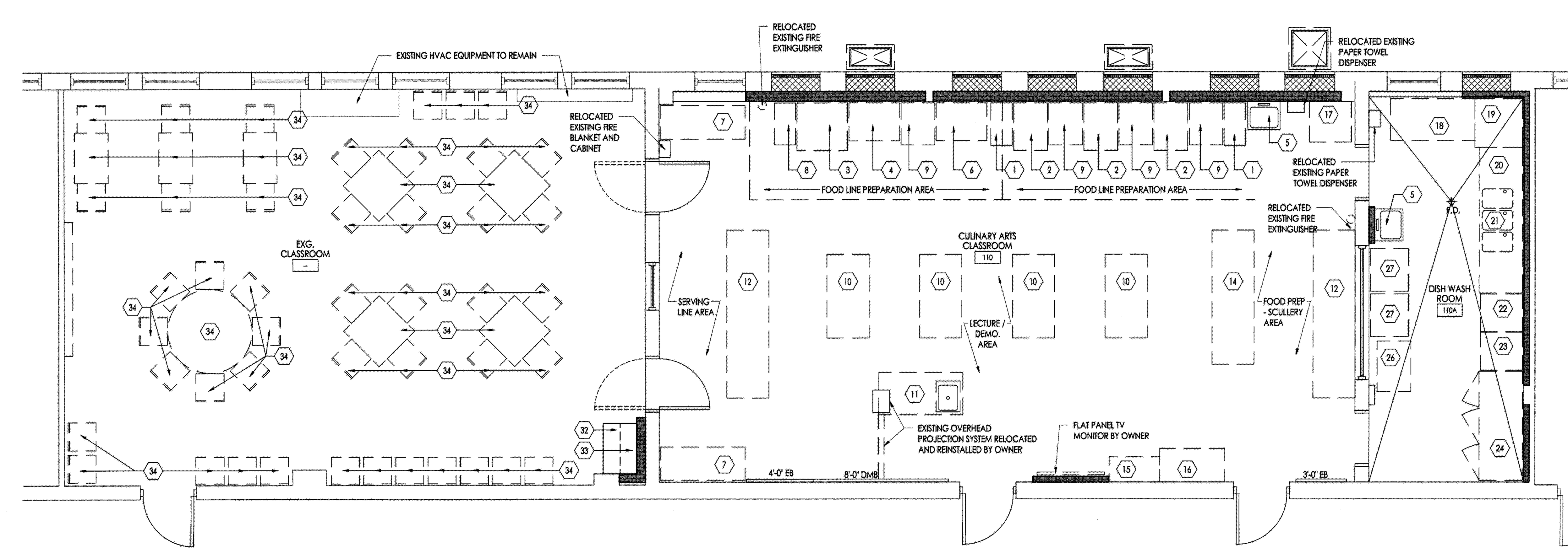

ENLARGED ROOM LAYOUT
1/4" = 1'-0"

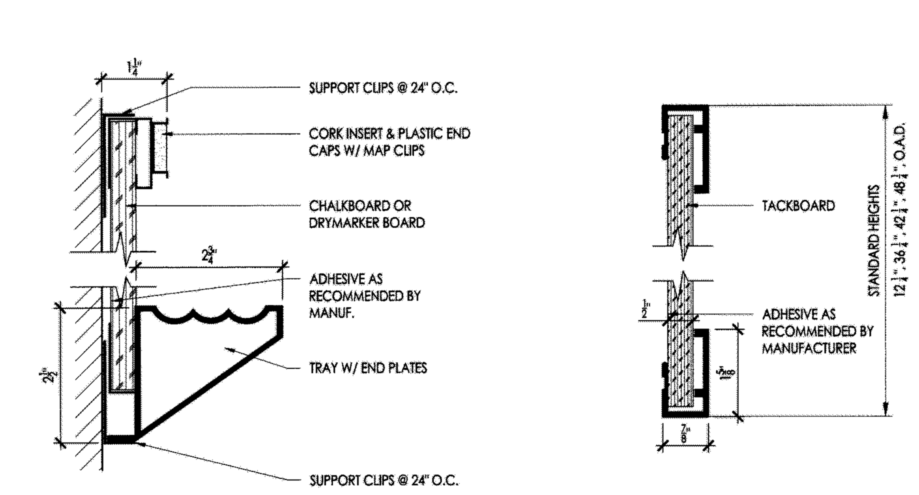

DMB/EB MOUNTING DETAILS
1/4" = 1'-0"

NOTE:
ALL FURNITURE AND EQUIPMENT WITHOUT THE SYMBOL ⬡ OR MARKED (N.I.C.) IS NOT IN CONTRACT UNLESS NOTED OTHERWISE. SEE EQUIPMENT SCHEDULE FOR EQUIPMENT MARKED WITH THE SYMBOL ⬡

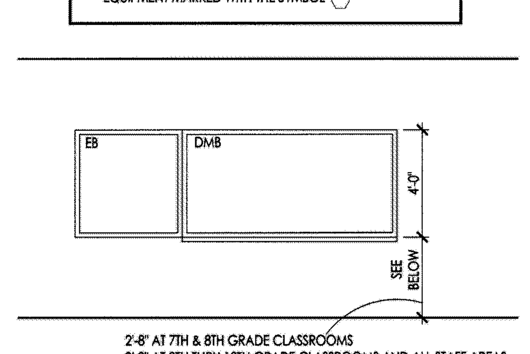

TYPICAL MOUNTING HEIGHTS
1/4" = 1'-0"

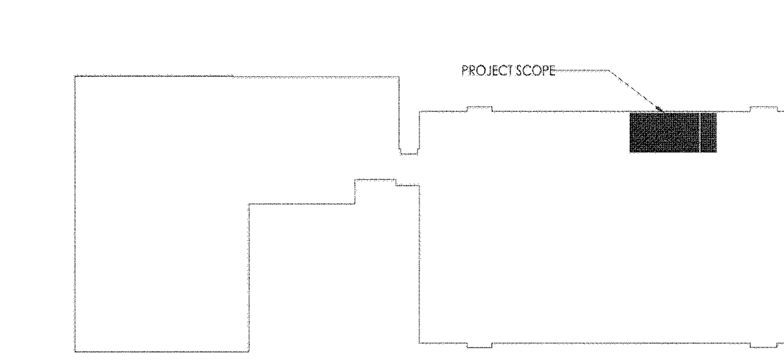

KEY PLAN
1/64"=1'-0"

JOHN J. VEISZ, AIA, CSBA
NJ - 21AI00866900 | PA - RA010819B
WILLIAM D. HOPKINS III, AIA, LEED AP
NJ - 21AI01706000 | PA - RA012520X
GEORGE R. DUTHIE JR., AIA, PP
NJ - 21AI01299200

Architect 12/20/19 Date

FVHD architects planners
EST 1918
Fraytak Veisz Hopkins Duthie PC
Corporate: 1515 Lower Ferry Road - Trenton - New Jersey 08628
Pennsylvania: 140 Whitaker Ave - Mont Clare - Pennsylvania 19453
FVHDPC.COM

Project Name
Culinary Arts Classroom Renovation at Wildwood Middle/ High School

Project Owner Name
Wildwood School District

Project Location
4300 Pacific Avenue Wildwood, NJ 08260

Project Number
5059
Project Date
12-20-2019
Checked By
JJV
Drawn By
TLS, JJD
Scale
As Noted

Drawing Name
Enlarged Room Layout, Equipment Schedule and Details

Revisions		
No.	Date	Description

Drawing Number
A401

PLUMBING FIXTURE ROUGHING SCHEDULE

PLAN NO	FIXTURE	WASTE	TRAP	VENT	CW	HW	NOTES
FD	FLOOR DRAIN	AS INDICATED ON PLANS	AS INDICATED ON PLANS	2"	1/2"	-	4 W/ DEEP SEAL TRAP & PRIMER
FSK	FLOOR SINKS	AS INDICATED ON PLANS	AS INDICATED ON PLANS	2"	-	-	4 W/ DEEP SEAL TRAP
(11)	K.E.C. PROVIDED SINK	1 1/2" X 1 1/2"	1 1/2"	1 1/2"	1/2"	1/2"	1,2
(5)	K.E.C. PROVIDED SINK	1 1/2" X 1 1/2"	1 1/2"	1 1/2"	1/2"	1/2"	1,2
(18)	K.E.C. PROVIDED TABLE W/ INTEGRAL SINK	2" X 2"	2"	1 1/2"	1/2"	1/2"	1,2
(19)	K.E.C. PROVIDED DISHWASHER	2" IW	4" FLOOR SINK	2"	-	3/4"	-
(20)	K.E.C. PROVIDED 3 - COMP SINK	(3) 2" IW	4" FLOOR SINK	2"	3/4"	3/4"	-
(22)	OWNER PROVIDED ELECTRIC DRYER	-	-	-	-	-	-
(23)	OWNER PROVIDED WASHER	2"	2" STANDPIPE	2"	3/4"	3/4"	GUY GRAY WASHER BOX

NOTES:
1. INSTALL FIXTURES IN ACCORDANCE WITH STATE AND LOCAL BARRIER FREE REQUIREMENTS. REFER TO ARCHITECTURAL DRAWINGS FOR EXACT TYPE, COUNT, AN LOCATION OF HANDICAP FIXTURES.
2. INSULATE ALL EXPOSED PIPING BELOW HANDICAP LAVATORIES WITH TRUBRO, LAV GUARD INSULATION KIT OR EQUAL.
3. PROVIDE FLEXIBLE COPPER LINE TO FLOOR DRAIN'S PRIMER CONNECTION UNDER SLAB W/ FOAM TYPE INSULATION AND PIPED UP TO FLUSH VALVE ADAPTOR OR A "PPP" PRIMER W/ ACCESS DOOR AND KEY.
4. ALL INSTALLATION TO BE PERFORMED PER NEW JERSEY PLUMBING CODE AND LOCAL HEALTH DEPARTMENT GUIDELINES AND RECOMMENDATIONS

FD FLOOR DRAIN: JR SMITH 2005-P050-SS-BB WITH DEEP SEAL TRAP WITH TRAP PRIMER CONNECTION. SIZE AS SHOWN ON PLAN.

FSK FIRE FLOOR DRAIN: JR SMITH 3008-LSH-DBS-12 WITH DEEP SEAL TRAP . SIZE AS SHOWN ON PLAN.

(11) KITCHEN EQUIPMENT CONSULTANT TO PROVIDE, PC TO INSTALL FAUCET AND DRAIN WITH "MC GUIRE" STOPS, FLEX SUPPLIES, ESCUTCHEONS, "P" TRAP, TAILPIECE AND "J" BEND BACK TO WASTE AND VENT AND BASKET STRAINER CONNECTION TO SINK BOWL AS REQUIRED.

(5) KITCHEN EQUIPMENT CONSULTANT TO PROVIDE, PC TO INSTALL FAUCET AND DRAIN WITH "MC GUIRE" STOPS, FLEX SUPPLIES, ESCUTCHEONS, "P" TRAP, TAILPIECE AND "J" BEND BACK TO WASTE AND VENT AND BASKET STRAINER CONNECTION TO SINK BOWL AS REQUIRED.

(18) KITCHEN EQUIPMENT CONSULTANT TO PROVIDE, PC TO INSTALL FAUCET AND DRAIN WITH "MC GUIRE" STOPS, FLEX SUPPLIES, ESCUTCHEONS, "P" TRAP, TAILPIECE AND "J" BEND BACK TO WASTE AND VENT AND BASKET STRAINER CONNECTION TO SINK BOWL AS REQUIRED. FAUCET TO HAVE INTEGRAL VACUUM BREAKER AND PROVIDE LOW FLOW SPRYER AS PER 2015 NSPC APPEDIX OF NO HIGHER THAN 1.5 GPM

(19) KITCHEN EQUIPMENT CONSULTANT TO PROVIDE, PC TO INSTALL HOT WATER AND INDIRECT WASTE CONNECTION AS REQUIRED BY LOCAL CODES. HOT WATER TO HAVE A UNION, VALVE AND CHECK ON THE OVERHEAD PIPING FOR EASY ACCESS AND MAINTENANCE.

(20) KITCHEN EQUIPMENT CONSULTANT TO PROVIDE, PC TO INSTALL FAUCET AND (3) 2" IW DRAIN FROM BASKET STRAINERS TO FLOOR SINK WITH APPROVED AIR GAPS. FAUCET TO HAVE INTEGRAL VACUUM BREAKER AND PROVIDE LOW FLOW SPRYER AS PER 2015 NSPC APPEDIX OF NO HIGHER THAN 1.5 GPM WITH OVER HEAD CHECK AND VALVE FOR EASY ACCESS AND MAINTENANCE.

(22) OWNER PROVIDED

(23) OWNER PROVIDED

TP TRAP PRIMER: "PPP" INC # MPB-500, CHROME PLATED, DISTRIBUTION UNIT, SERVICE VALVE AND ELECTRICAL CONNECTION TO ENERGIZE THE UNIT. (PROVIDE UNI-STRUT SUPPORTS TO INSTALL UNIT AS ILLUSTRATED)

COWP JR SMITH FIGURE 4472T (STAINLESS STEEL COVER), WALL CLEANOUT WITH ACCESS COVER, TAPER THREAD, BRONZE PLUG. SIZE PER PLAN. ACCESS COVER TO BE STAINLESS STEEL

CODP JR SMITH FIGURE 4023S 5 3/4" DIA, CAST IRON CLEANOUT WITH ROUND ADJUSTABLE SCORIATED SECURED NICKEL BRONZE TOP. TAPER THREAD, BRONZE PLUG. SIZE PER PLAN.

GT-1 GREASE TRAP: JR SMITH FIGURE 8450-B-ARIO-AC-F-E12, 75 GPM, 150 LBS GREASE CAPACITY., STEEL CONSTRUCTION WITH ACID RESISTANT COATING INSIDE AND OUT, ALUMINUM COVER, SEDIMENT BUCKET, FLOW CONTROL FITTING, EXTENSION & 4" INLET/OUTLET. FIELD VERIFY EXTENSION HEIGHT PRIOR TO ORDERING. INTERCEPTOR SHALL BE PDI CERTIFIED. PROVIDE RECESSED COVER AS REQUIRED FOR FLOOR TYPE.
INTERCEPTOR SIZING BASED ON 2015 NATIONAL STANDARD PLUMBING CODE,
(3) 2" DRAINS @ 22.5 GPM EACH = 67.5 GPM MINIMUM.

PLUMBING GENERAL NOTES

1. DO NOT SCALE FROM THESE DRAWINGS.
2. ALL WORK SHALL BE PERFORMED IN ACCORDANCE WITH ALL APPLICABLE AND ADOPTED REGULATIONS INCLUDING BUT NOT LIMITED TO NATIONAL, CITY, STATE, LOCAL CODES AND ORDINANCES WHICH MAY BE IN EFFECT. ALL PLUMBING MATERIALS, INSTALLATION PROCEDURES AND SYSTEM LAYOUTS SHALL BE APPROVED BY ALL APPLICABLE CODE ENFORCEMENT AUTHORITIES HAVING JURISDICTION. THE PLUMBING CONTRACTOR SHALL OBTAIN AND PAY FOR ALL NECESSARY PERMITS AND APPROVALS FOR THIS INSTALLATION.
3. THE DRAWINGS HAVE BEEN PRODUCED ENTIRELY ON FPA CADD SYSTEM. ANY OTHER LETTERING, LINES OR SYMBOLS, OTHER THAN PROFESSIONAL STAMPS AND SIGNATURES, HAVE BEEN MADE WITHOUT THE AUTHORIZATION OF FPA AND ARE INVALID.
4. REPRODUCTION OF ANY PORTION OF THE CONTRACT DRAWINGS FOR RESUBMITTAL AS SHOP DRAWINGS IS PROHIBITED. SHOP DRAWINGS PRODUCED IN SUCH A MANNER WILL BE REJECTED AND RETURNED.
5. UPON CONTRACT AWARD, CONTRACTOR SHALL CONTACT LOCAL UTILITY COMPANY TO SCHEDULE ANY UTILITY UPGRADES. CONTRACTOR SHALL BE RESPONSIBLE TO COORDINATE ALL UTILITY UPGRADES, SECURE ALL PERMITS AND INSPECTIONS.
6. ALL CONNECTIONS TO EXISTING BUILDING SERVICES SHALL BE CAREFULLY COORDINATED WITH THE UTILITY CO. AND THE OWNER'S SCHEDULE. SERVICE WORK OF THIS NATURE TO OCCUR DURING UNOCCUPIED BUILDING HOURS. THE CONTRACTOR SHALL BE RESPONSIBLE TO ENSURE THAT ALL EXISTING EQUIPMENT IS OPERATIONAL AFTER ANY SHUTDOWN OCCURS.
7. CHANGES OR SUBSTITUTIONS OF EQUIPMENT WILL NOT BE ALLOWED WITHOUT SPECIFIC WRITTEN APPROVAL FROM THE ARCHITECT OR ENGINEER. ALL COSTS RESULTING FROM THE SELECTION OF OTHER THAN SPECIFIED EQUIPMENT SHALL BE BORNE BY THE CONTRACTOR, INCLUDING, BUT NOT LIMITED TO WORK AFFECTING OTHER CONTRACTORS, THE OWNER, OR RE-DESIGN ISSUES.
8. ALL INDICATED WORK SHALL BE PERFORMED BY THE PLUMBING CONTRACTOR UNLESS OTHERWISE NOTED.
9. DO NOT USE ANY PART OF THE OWNER'S BUILDING AS A SHOP, EXCEPT PARTS DESIGNATED FOR SUCH PURPOSES BY THE OWNER.
10. ALL CONTRACT WORK SHALL BE PERFORMED IN ACCORDANCE WITH ALL REQUIREMENTS OF THE WRITTEN SPECIFICATIONS FOR THIS PROJECT WHICH ARE CONSIDERED TO BE AN INTEGRAL PART OF THE CONTRACT DOCUMENTS. ALL CONTRACTORS AND SUBCONTRACTORS SHALL MAINTAIN (AT THE JOB SITE) AND REFER TO COPIES OF THE WRITTEN SPECIFICATIONS AS PART OF THESE DRAWINGS. REFER TO THE WRITTEN SPECIFICATIONS IN CONJUNCTION WITH THE PLANS FOR FULL PROJECT SCOPE. IN ALL CASES OF DISCREPANCY BETWEEN PLANS AND SPECIFICATIONS, THE MORE STRINGENT REQUIREMENTS SHALL GOVERN AND WHERE IT IS UNCLEAR, SUCH CASES SHALL BE REFERRED TO THE ENGINEER FOR ADJUDICATION.
11. ANY DISCREPANCIES OR INADEQUACIES WITHIN THESE BID DOCUMENTS OR BETWEEN THESE BID DOCUMENTS AND RELATED HVAC, ELECTRICAL, FIRE PROTECTION, ARCHITECTURAL, INTERIOR DECOR AND FIELD CONDITIONS SHALL BE BROUGHT TO THE ATTENTION OF THE ARCHITECT AND/OR ENGINEER PRIOR TO BID SUBMISSION.
12. THE CONTRACTOR SHALL VISIT THE SITE PRIOR TO SUBMITTING HIS BID FOR THE PROPOSED WORK. HE SHALL BE RESPONSIBLE TO VERIFY FIELD CONDITIONS. ANY DISCREPANCIES SHALL BE BROUGHT TO THE ATTENTION OF THE ENGINEER PRIOR TO SUBMISSION OF BIDS IN WRITING.
13. THE PLUMBING CONTRACTOR SHALL REVIEW THESE PLANS AND SPECIFICATIONS, AS WELL AS THE RELATED HVAC, ELECTRICAL, ARCHITECTURAL, INTERIOR DECOR AND SITE ENGINEERING DRAWINGS TO BECOME FAMILIAR WITH THE FULL PROJECT SCOPE. DURING THE COURSE OF CONSTRUCTION COORDINATION AND ACTUAL CONSTRUCTION, THE PLUMBING CONTRACTOR SHALL COOPERATE WITH ALL OTHER CONTRACTORS AND TRADES ON THIS PROJECT TO ENSURE A SMOOTH RUNNING AND CAREFULLY COORDINATED INSTALLATION.
14. CONTRACTOR SHALL COORDINATE HIS SCHEDULING WITH THE OWNER AND GENERAL CONTRACTOR TO COMPLY WITH THE OWNERS USAGE OF THE BUILDING.
15. IF ANY UNEXPECTED DISCOVERY OF SUSPECTED HAZARDOUS MATERIALS IS MADE DURING THE COURSE OF WORK, THE CONTRACTOR SHALL REPORT THE DISCOVERY IMMEDIATELY TO THE OWNER. THE CONTRACTOR SHALL STOP ANY WORK THAT MAY DISTURB THE SUSPECTED HAZARDOUS MATERIAL. CONTRACTOR SHALL RESUME WORK AFTER ALL HAZARDOUS MATERIAL HAS BEEN REMEDIATED.
16. CONTRACTOR RESPONSIBLE FOR THE PROPER CARE OF ALL OWNER'S EQUIPMENT AND/OR FURNISHINGS WHICH ARE REQUIRED TO BE TEMPORARILY REMOVED, STORED OR RELOCATED. CONTRACTOR SHALL REPLACE, REPAIR OR REIMBURSE OWNER FOR ALL DAMAGES TO SUCH PROPERTIES AT FULL REPLACEMENT VALUE AND EQUIVALENCY. CONTRACTOR SHALL ADVISE OWNER FOR DISPOSITION OR REMOVED EQUIPMENT AND/OR MATERIALS.
17. CONTRACTOR'S WORK MAY BE REQUIRED OUTSIDE OF DESIGNATED SPACE. ALL SYSTEMS BEING DEMOLISHED AND REMOVED, MODIFIED, AND/OR TERMINATED SHALL BE FIELD VERIFIED TO INSURE NO WORK PERFORMED, INSIDE OR OUTSIDE OF THE DESIGNATED SPACE, SHALL DISRUPT ANY SERVICE OR SYSTEMS OF ANY OTHER AREAS. IF ANY CONDITIONS ARISE THAT ARE NOT IDENTIFIED ON DRAWINGS, IMMEDIATE NOTIFICATION SHALL BE PROVIDED TO THE ENGINEER OR OWNER. NO WORK SHALL PROCEED WITHOUT APPROVALS FROM ENGINEER OR OWNER.
18. DRAWINGS ARE DIAGRAMMATIC IN NATURE AND MAY HAVE TO BE ADAPTED TO COMPLY WITH EXISTING BUILDING CONDITIONS. CONTRACTOR SHALL SUBMIT PLUMBING SHOP DRAWINGS, INDICATING LOCATIONS, AND ROUTING OF DUCTS, PIPING, AND WIRING.
19. PIPING SHOWN ON DRAWINGS SHOW THE GENERAL RUN AND CONNECTIONS AND MAY OR MAY NOT IN ALL PARTS BE SHOWN IN ITS EXACT POSITION. CONTRACTOR SHALL BE RESPONSIBLE FOR ERECTING THE PIPING SUITABLE IN EVERY RESPECT FOR THE WORK. PIPING SHALL BE INSTALLED SO THAT ACCESS, CLEARANCE, HEADROOM AND PITCH ARE MAINTAINED. CONTRACTORS OF THE VARIOUS TRADES SHALL COORDINATE THE INSTALLATION.
20. ALL CONTRACTORS SHALL PROVIDE CUTTING AND PATCHING FOR THEIR RESPECTIVE TRADES.
21. REMOVE AND REINSTALL CEILING SYSTEM AS REQUIRED FOR THE INSTALLATION OF PLUMBING WORK AND REPLACE IN KIND ANY COMPONENTS DAMAGED BY PERSONNEL OR EQUIPMENT DURING PERFORMANCE OF THE WORK. PATCH AND REPAIR ALL DAMAGE CAUSED BY REMOVAL. MATCH EXISTING ADJACENT SURFACES.
22. THE PLUMBING CONTRACTOR SHALL BE RESPONSIBLE FOR FINAL CONNECTION OF DOMESTIC WATER, GAS, SANITARY AND VENT PIPING INCLUDING VALVES, TRIMS AND EQUIPMENT, TO PLUMBING FIXTURES AT LOCATIONS INDICATED ON THE PLANS.
23. RUN ALL DOMESTIC WATER AND SANITARY WASTE AT LOWEST LEVEL, AND SANITARY VENT AS HIGH AS POSSIBLE THROUGHOUT ENTIRE BUILDING. INSTALL LONG RUNS OF PIPING WITHIN STEEL (JOIST) SPACE AND OTHER PIPING TIGHT TO BOTTOM OF STEEL. COORDINATE AND VERIFY WITH OTHER CONTRACTORS SO AS NOT TO INTERFERE WITH DUCTWORK, LIGHTING SYSTEMS, ETC.
24. ALL EXPOSED HORIZONTAL AND VERTICAL PIPING SHALL BE INSTALLED IN A NEAT ARRANGEMENT IN LOCATIONS WHICH ARE THE MOST INCONSPICUOUS. VERTICAL DROPS SHALL BE KEPT TO AN ABSOLUTE MINIMUM AND THEIR FINAL LOCATIONS SHALL BE COORDINATED AND RUN WITHIN CHASES, WALLS, SOFFITS WITH OTHER MECHANICAL/ELECTRICAL FEEDS. PLUMBING CONTRACTOR SHALL REVIEW ARCHITECTURAL DRAWINGS FOR CHASE LOCATIONS TO COORDINATE ALL VERTICAL PIPING ROUTING. ALL SUCH LOCATIONS ARE TO BE REVIEWED WITH ARCHITECT/ENGINEER PRIOR TO INSTALLATION.
25. ALL PLUMBING FIXTURES/APPLIANCES SHALL HAVE THEIR OWN INDEPENDENT SHUT-OFF VALVES, INSTALLED IN AN EASILY ACCESSIBLE AND CONVENIENT LOCATION. EACH DOMESTIC WATER BRANCH LINE SHALL HAVE ITS OWN SHUT-OFF VALVE.
26. DOMESTIC HOT WATER HEATER TEMPERATURE/PRESSURE RELIEF VALVES SHALL BE PIPED FULL SIZE TO THE NEAREST APPROVED STANDPIPE OR FLOOR DRAIN. THIS REQUIREMENT SHALL BE APPLICABLE TO ALL DOMESTIC WATER HEATERS EXCEPT INSTANTANEOUS WATER HEATERS.
27. THE PLUMBING CONTRACTOR SHALL RUN OUT ALL BUILDING DRAINAGE AND WASTE LINES TO WITHIN 5'-0" OF THE BUILDING FOUNDATION AND MAKE FINAL CONNECTIONS TO SITE SYSTEMS AS INDICATED ON PLANS. COORDINATE WITH SITE ENGINEER.
28. FURNISH AND INSTALL PIPE SLEEVES OR SLEEVE SEAL SYSTEMS AS REQUIRED. SEE SPECIFICATION FOR DETAILS.
29. ALL PIPING SYSTEM PENETRATIONS OF FIRE-RATED WALLS AND FLOORS SHALL BE SEALED WITH UL APPROVED FIRE RESISTANT JOINT SEALER TO MAINTAIN FIRE,SMOKE AND DRAFT INTEGRITY OF STRUCTURE. SPECIFIED TECHNOLOGIES "PENSIL 200" OR EQUAL. TWO-PART FOAMED-IN-PLACE SILICONE SEALANT. FIRE RESISTANT SEALER SHALL BE TESTED IN ACCORDANCE WITH ASTM 814. INSTALL SEALANT, INCLUDING FOAMING, PACKING AND OTHER ACCESSORY MATERIALS TO FILL OPENINGS WHERE FIRE-RATED WALL PENETRATIONS OCCUR. COMPLY WITH INSTALLATION REQUIREMENTS ESTABLISHED BY TESTERS AND INSPECTION AGENCY.
30. ALL PENETRATIONS IN FOUNDATION WALLS AND FLOORS INCLUDING SLAB PENETRATIONS SHALL BE SUBSTANTIALLY SEALED BY UTILIZING A NON-CRACKING POLYURETHANE OR SIMILAR CAULK, OR EQUIVALENT IN ORDER TO CLOSE OFF THE SOIL GAS (RADON) ENTRY ROUTES AS REQUIRED BY CODE.
31. INSULATE ALL NEW HOT WATER AND COLD WATER PIPING SYSTEMS. INSULATION SHALL BE INSTALLED AS A COMPLETE SYSTEM INCLUDING VALVES, FITTINGS, ETC. SEE SPECIFICATIONS FOR ADDITIONAL INFORMATION.
32. INSULATE ROOF DRAIN & OVERFLOW DRAIN BODIES AND ALL INTERIOR STORM PIPING. INSULATION SHALL BE INSTALLED AS A COMPLETE SYSTEM INCLUDING FITTINGS, ETC. SEE SPECIFICATIONS FOR ADDITIONAL INFORMATION.
33. ALL CONTRACTORS REMOVING ANY EQUIPMENT, PIPES, DUCTS, CONDUITS, ETC SHALL PATCH ALL SURFACES DISTURBED OR LEFT UNFINISHED BY THIS WORK TO MATCH ADJACENT SURFACES.
34. PROVIDE GAS PIPING SUPPORTS ON ROOF AT ALL DIRECTION CHANGES AND STRAIGHT RUNS WITH SPACING NOT EXCEEDING LENGTHS STATED IN TABLE 415.1 OF IFGC, 2015 FOR MATERIALS AND LISTED PIPE SIZES. SUPPORTS SHALL BE SADDLE BLOCK ROLLER TYPE WITH PIPE SECURED TO STAND WITH CLAMP OR METAL BAND. SUPPORT SHALL NOT BE SECURED TO ROOF SURFACE. BOTTOM OF PIPING SHALL BE MINIMUM 3 1/2" ABOVE ROOF SURFACE.
35. WHERE SLABS ARE CUT FOR UNDERSLAB PIPING OR BEING REPLACED, COORDINATE WITH ARCHITECTURAL DRAWINGS TO PITCH FLOOR TO FLOOR DRAIN.
36. ALL FLOOR DRAIN TRAPS SHALL BE PROVIDED WITH DEEP SEAL TRAPS AND TRAP PRIMER VALVES.
37. THE PLUMBING CONTRACTOR SHALL PROVIDE A COMPLETE SET OF "AS-BUILT" DRAWINGS INDICATING THE PRECISE LOCATION OF ALL SYSTEMS, EQUIPMENT CONCEALED OR EMBEDDED PIPES, PIPE CONNECTIONS AND ACCESS DOORS. THESE PLANS SHALL ALSO INCLUDE ALL CHANGES AND DEVIATIONS FROM BID DOCUMENTS.

PLUMBING ABBREVIATIONS

AW	ACID WASTE	IE	INVERT ELEVATION
CO	CLEANOUT	LAV	LAVATORY
CODP	CLEANOUT DECK PLATE	OSY	OUTSIDE SCREW & YOKE GATE VALVE
COG	CLEANOUT GRADE		
COWP	CLEANOUT WALL PLATE	PSI	POUNDS PER SQUARE INCH (GAUGE)
CW	COLD WATER		
DN	DOWN (PENETRATES FLOOR SLAB)	SAN	SANITARY
DFU	DRAINAGE FIXTURE UNIT	ST	STORM
EJDIS	EJECTOR DISCHARGE	SQ FT	SQUARE FOOT
EWC	ELECTRIC WATER COOLER	TP	TRAP PRIMER
FPWH	FROST PROOF WALL HYDRANT	TW	TEMPERED WATER
FD	FLOOR DRAIN	UG	UNDERGROUND
FU	FIXTURE UNIT	UP	UP (PENETRATES FLOOR SLAB)
FT	FEET	UR	URINAL
G	GAS	V	VENT
GPM	GALLONS PER MINUTE	VIF	VERIFY IN FIELD
GAL	GALLONS	VTR	VENT THROUGH ROOF
HB	HOSE BIBB	WC	WATER CLOSET
HW	HOT WATER	WFU	WATER FIXTURE UNITS
HWR	HOT WATER RETURN	WHA	WATER HAMMER ARRESTOR
IW	INDIRECT WASTE	K.E.C.	KITCHEN EQUIPMENT CONSULTANT
		P.C.	PLUMBING CONTRACTOR

APPLICABLE CODES:

ALL WORK SHALL BE IN STRICT ACCORDANCE WITH THE LATEST CODES AND SUBCODES AS ADOPTED BY THE STATE OF NEW JERSEY:

- NEW JERSEY UNIFORM CONSTRUCTION CODE (NJUCC)
- REHABILITATION SUBCODE 5:23-6
- ADMINISTRATIVE CODE: TITLE 6
- 2018 INTERNATIONAL BUILDING CODE - NJ EDITION
- 2017 NATIONAL ELECTRICAL CODE
- 2018 NATIONAL STANDARD PLUMBING CODE
- 2018 INTERNATIONAL MECHANICAL CODE
- 2018 INTERNATIONAL FUEL GAS CODE
- 2016 ASHRAE 90.1 ENERGY CONSERVATION CODE
- 2016 NFPA 13
- REQUIREMENTS OF LOCAL AUTHORITY HAVING JURISDICTION

PLUMBING LEGEND

SYMBOLS	DESCRIPTION
	SOIL OR WASTE PIPING
	VENT PIPING
IW	INDIRECT WASTE PIPING
	DOMESTIC COLD WATER PIPING
	DOMESTIC HOT WATER PIPING
	DOMESTIC HOT WATER CIRCULATION PIPING
G	NATURAL GAS PIPING
	EXISTING PIPING TO REMAIN
	EXISTING PIPING TO BE REMOVED
	EXISTING PIPING TO BE ABANDONED
(C.T.E.)	POINT OF NEW CONNECTION TO EXISTING WORK
A.D. W.H.A.	WATER HAMMER ARRESTER W/ ACCESS DOOR
	HOSE BIBB
	WALL HYDRANT
	CLEAN-OUT/PLUG OUTLET
	CLEAN-OUT DECK PLATE OR GRADE PLATE
	"P" TRAP
	BOTTOM PIPE CONNECTION
	TOP PIPE CONNECTION
	ELBOW TURNED DOWN
	ELBOW TURNED UP/CONNECTION TO VERTICAL LINE
	VALVE IN VERTICAL
	GATE OR BALL VALVE
	BALL VALVE
	CHECK VALVE
	OS&Y (OUTSIDE SCREW & YOKE) VALVE
	GAS COCK
	RELIEF VALVE
	UNION
	FLOOR DRAIN/ FLOOR SINK
	PUMP
M	METER
	CIRCUIT SETTER ASSEMBLY
BPA	BACKFLOW PREVENTER ASSEMBLY

FRENCH & PARRELLO ASSOCIATES
Corporate Office
1800 Route 34, Suite 101
Wall, NJ 07719
732.312.9800
Regional Offices
Hackettstown, NJ
New York, NY
KEVIN DWYER, PE
PROFESSIONAL ENGINEER, NJ LIC. No. 24GE03525400

JOHN J. VEISZ, AIA, CSBA
NJ - 21AI00866900 | PA - RA010819B
WILLIAM D. HOPKINS III, AIA, LEED AP
NJ - 21AI01706000 | PA - RA012520X
GEORGE R. DUTHIE JR., AIA, PP
NJ - 21AI01299200
Architect
Date 12/20/19
FVHD architects planners
EST 1918
Fraytak Veisz Hopkins Duthie PC
Corporate: 1515 Lower Ferry Road - Trenton - New Jersey 08628
Pennsylvania: 140 Whitaker Ave - Mont Clare - Pennsylvania 19453
FVHDPC.COM

Project Name
Culinary Arts Classroom Renovation at Wildwood Middle/ High School

Project Owner Name
Wildwood School District

Project Location
4300 Pacific Avenue Wildwood, NJ 08260

Project Number
5059

Project Date
12-20-2019

Checked By

Drawn By

Scale

Drawing Name
PLUMBING SYMBOLS NOTES AND ABBREVIATIONS

Revisions		
No.	Date	Description

Drawing Number
P1.0

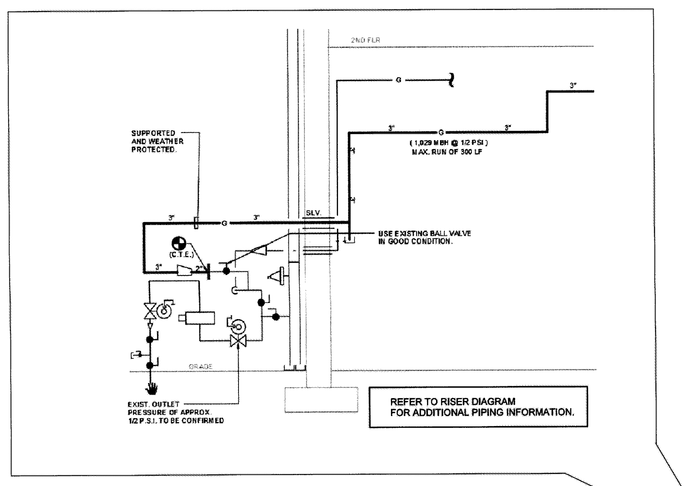

REFER TO RISER DIAGRAM FOR ADDITIONAL PIPING INFORMATION.

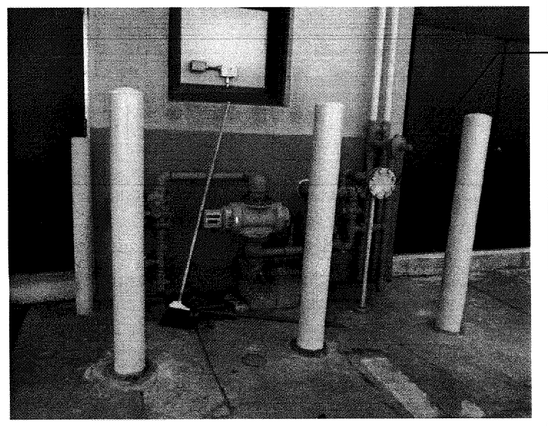

CONNECT TO EXISTING FLANGE/VALVE TEMPORARY CONNECTION USED DURING THE BOILER REPLACEMENT TO MINIMIZE EXISTING PIPE MODIFICATION. COORDINATE WITH LOCAL GAS COMPANY FOR LOAD AND PRESSURE AVAILABLE AT THE EXISTING SERVICE.

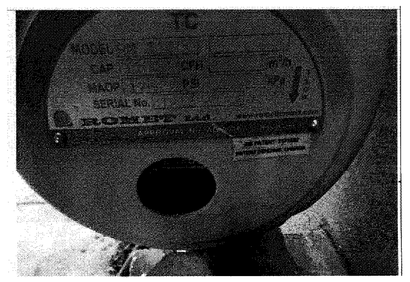

EXISTING ROTARY METER
SCALE: N.T.S.

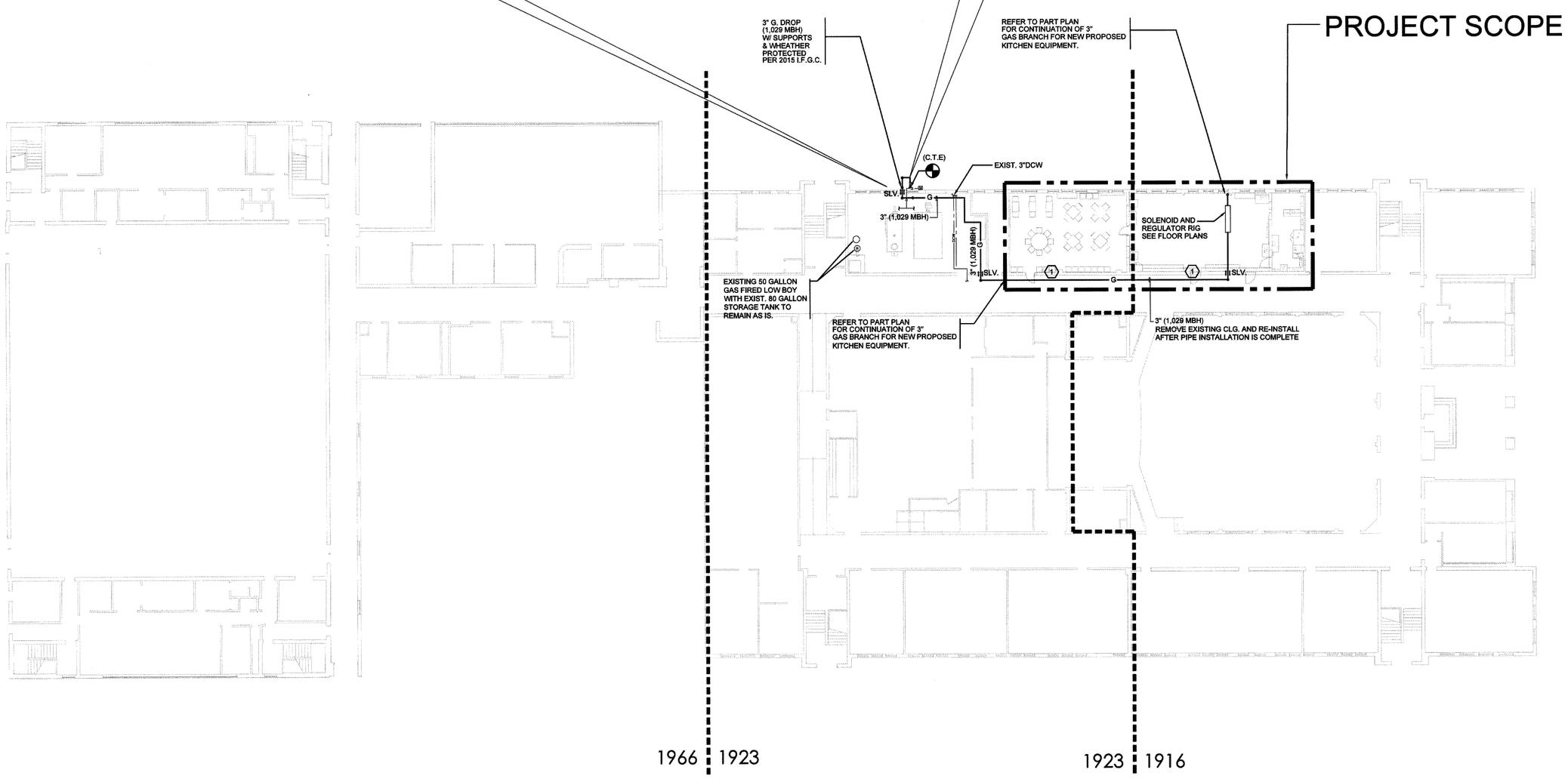

OVERALL FLOOR PLAN
SCALE: 3/32" = 1'-0"

KEY NOTES

1. REMOVE CEILING WHILE NEW PROPOSED WORK IS PERFORMED AND RE-INSTALL IT AFTER INSTALLATION IS COMPLETED.

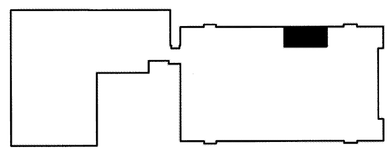

KEY PLAN
SCALE: NONE

FRENCH & PARRELLO ASSOCIATES
Corporate Office
1800 Route 34, Suite 101
Wall, NJ 07719
732.312.9800
Regional Offices
Hackettstown, NJ
New York, NY

KEVIN DWYER, PE
PROFESSIONAL ENGINEER, NJ LIC. No. 24GE03525400

JOHN J. VEISZ, AIA, CSBA
NJ - 21AI00866900 | PA - RA0108198
WILLIAM D. HOPKINS III, AIA, LEED AP
NJ - 21AI01706000 | PA - RA012520X
GEORGE R. DUTHIE JR., AIA, PP
NJ - 21AI01299200
Architect
Date 12/20/19

FVHD architects planners
Fraytak Veisz Hopkins Duthie PC
Corporate: 1515 Lower Ferry Road - Trenton - New Jersey 08628
Pennsylvania: 140 Whitaker Ave - Mont Clare - Pennsylvania 19453
FVHDPC.COM

Project Name
Culinary Arts Classroom Renovation at Wildwood Middle/ High School

Project Owner Name
Wildwood School District

Project Location
4300 Pacific Avenue
Wildwood, NJ
08260

Project Number
5059

Project Date
12-20-2019

Checked By

Drawn By

Scale

Drawing Name
PLUMBING OVERALL FLOOR PLAN

Revisions

No.	Date	Description

Drawing Number
P1.1

DEMOLITION KEY NOTES

(A) CONTRACTOR SHALL PERFORM A CAMERA INVESTIGATION OR GROUND PENETRATING RADAR TO CONFIRM THE EXACT LOCATION, ROUTING AND INVERT OF THE EXISTING STEEL GALVANIZED THREADED PIPES SERVING THE SINKS AS REQUIRED AND USE THE LOCATION TO FINALIZE THE SAW CUTTING TRENCH AND REMOVALS.

(B) DISCONNECT AND REMOVE EXISTING DOUBLE COUNTER MOUNTED SINK , CAP PIPING CONCEALED BELOW THE FLOOR AND/OR ABOVE THE CEILING AS ILLUSTRATED. REMOVE WATER LINES BELOW THE FLOOR AND CAP THEM BACK AT MAIN IN CORRIDOR CEILING. TRENCH THE FLOOR TO REMOVE THE WATER LINES AS REQUIRED. COORDINATE WITH GENERAL CONTRACTOR FOR PATCHING AND FINISHES WITH THE ARCHITECT.

(C) DISCONNECT AND REMOVE GAS PIPING SERVING THE STOVE AND CAP CONCEALED BACK TO MAIN IN CORRIDOR AS REQUIRED.

(D) DISCONNECT AND REMOVE EXISTING CLOTHE WASHER, CAP WATER AND WASTE PIPING CONCEALED IN WALL AND/OR CEILING SPACE.

(E) EXISTING SOLENOID VALVE TO BE REMOVED AND CAP PIPING CONCEALED AS PER 2015 IFGC.

(F) COORDINATE AND PROVIDE TRENCHING OF THE EXISTING BLOCK WALL TO SET NEW PROPOSED PIPES SERVING THE TEACHER'S SINK AND GENERAL PURPOSE FLOOR DRAINS. ALL TO BE COORDINATE WITH OVERHEAD DUCT WORK BEFORE IT IS PERFORMED.

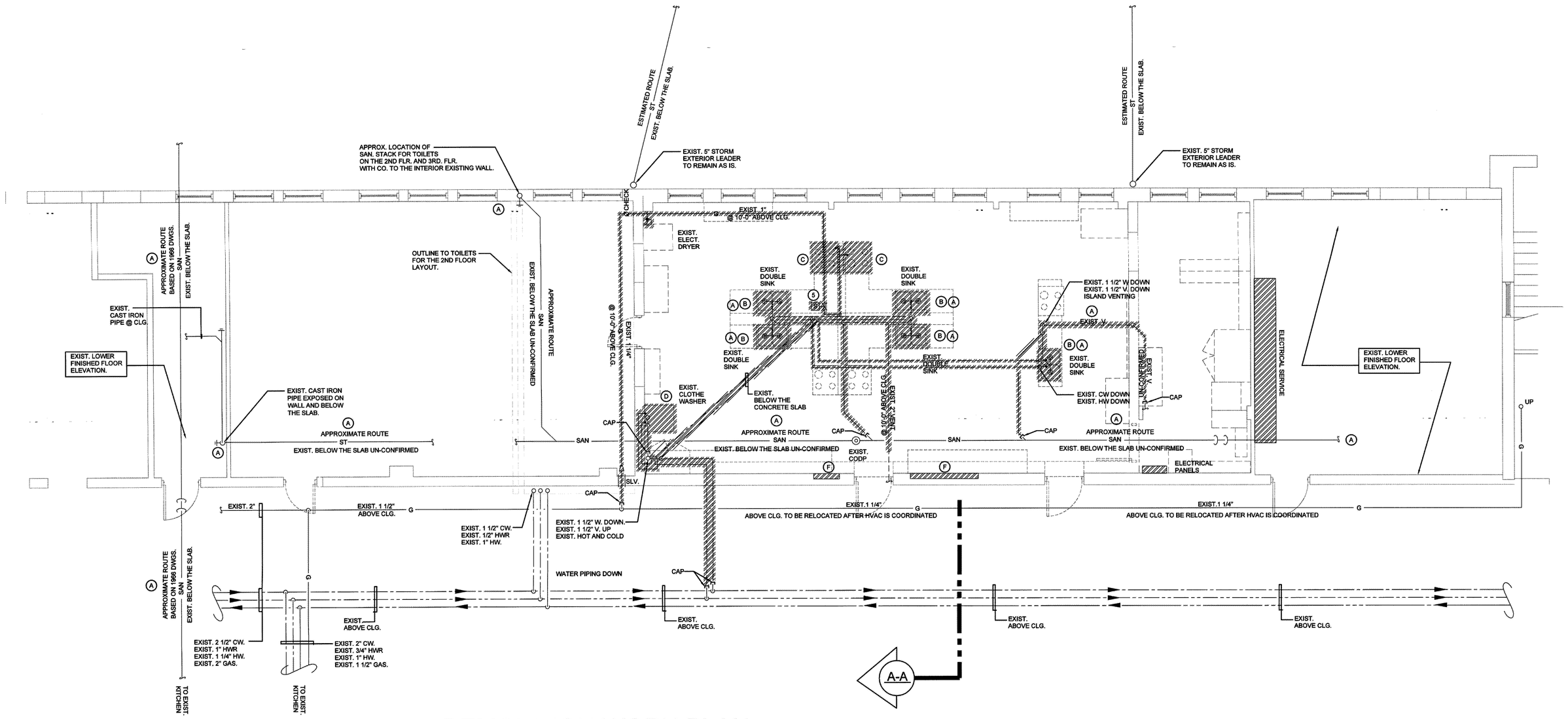

DEMOLITION WORK PLAN

SCALE: 1/4" = 1'-0"

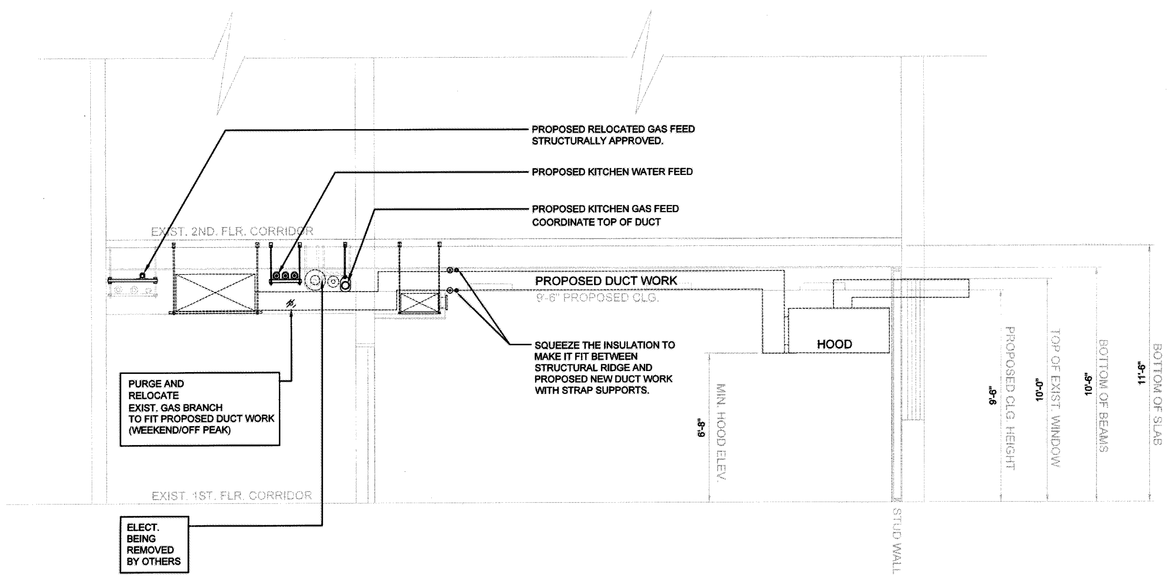

SCHEMATIC DEMOLITION SECTION FOR PROPOSED NEW WORK - SECTION A-A

SCALE: N.T.S.

REFER TO ARCHITECTURAL DRAWINGS FOR EXACT FINISHED FLOOR AND CEILING ELEVATION AND FINISHED TO BE COORDINATED

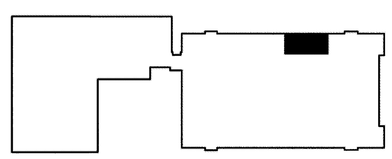

KEY PLAN
SCALE: NONE

FRENCH & PARRELLO ASSOCIATES
Corporate Office
1800 Route 34, Suite 101
Wall, NJ 07719
732.312.9800
Regional Offices
Hackettstown, NJ
New York, NY

KEVIN DWYER, PE
PROFESSIONAL ENGINEER, NJ LIC. No. 24GE03525400

JOHN J. VESZ, AIA, CSBA
NJ - 21A0006960 | PA - 609599

WILLIAM D. HOPKINS III, AIA, LEED AP
NJ - 21A0176000 | PA - RA015204

GEORGE R. DUTHIE JR., AIA, PP
NJ - 21A0129700

Architect Date 12/20/19

FVHDPC.COM

FVHD architects planners
Fraytak Veisz Hopkins Duthie PC
Corporate: 1515 Lower Ferry Road - Trenton - New Jersey 08628
Pennsylvania: 140 Whitaker Ave - Mont Clare - Pennsylvania 19453

Project Name
Culinary Arts Classroom Renovation at Wildwood Middle/ High School

Project Owner Name
Wildwood School District

Project Location
4300 Pacific Avenue
Wildwood, NJ 08260

Project Number
5059

Project Date
12-20-2019

Checked By

Drawn By

Scale

Drawing Name
PLUMBING DEMOLITION WORK PART PLAN

Revisions

No.	Date	Description

Drawing Number
P2.0

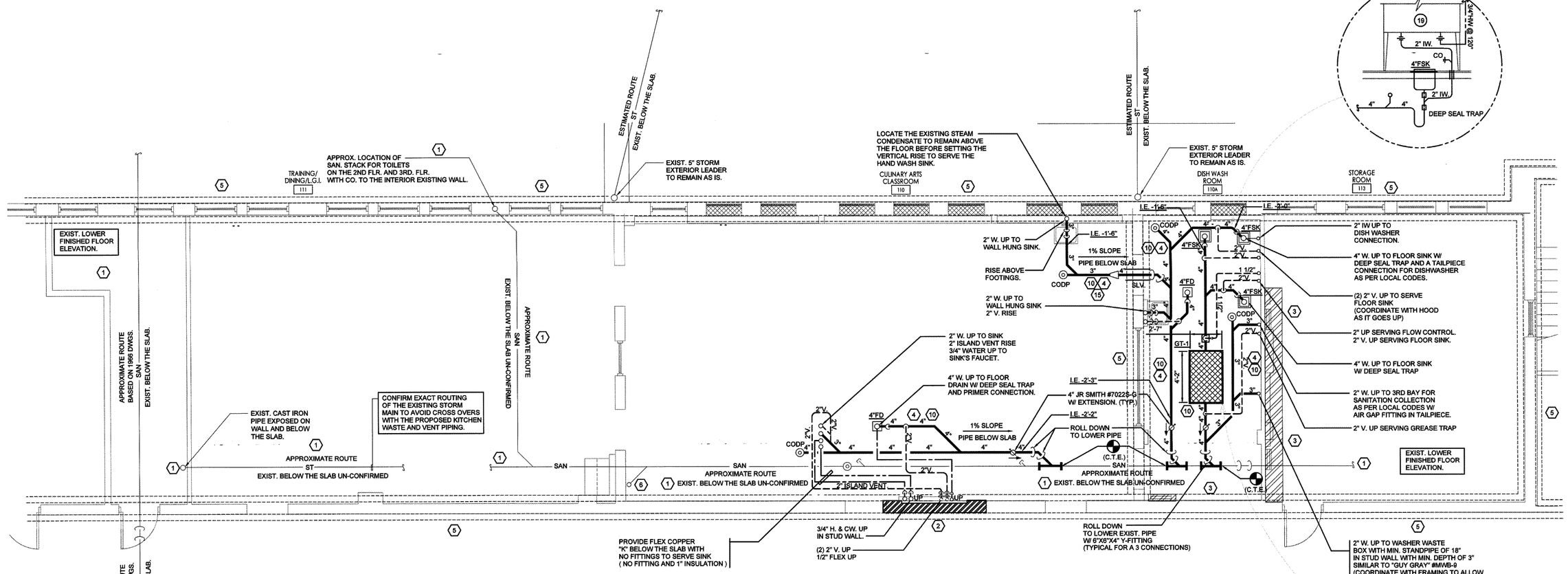

NEW WORK PLAN - UNDERSLAB PIPING

SCALE: 1/4" = 1'-0"

KEY NOTES

1. CONTRACTOR SHALL PERFORM A CAMERA INVESTIGATION OR GROUND PENETRATING RADAR TO CONFIRM THE EXACT LOCATION, ROUTING AN INVERT OF THE EXISTING STEEL GALVANIZED THREADED PIPES SERVING THE SINKS AS REQUIRED AND USE THE LOCATION TO FINALIZE THE SAW CUTTING TRENCH AND REMOVALS.
2. TRENCH EXISTING BLOCK WALL TO SET NEW PROPOSED PIPES AND RE-STORE TO ITS ORIGINAL RATING AS PER LOCAL BUILDING CODES. COORDINATE WITH ARCHITECT FOR PATCHING AND FINISHES
3. COORDINATE WITH ALL ELECTRICAL FEEDER BELOW SLAB.
4. TRENCH AND EXCAVATE TO SET PROPOSED NEW PIPING AS REQUIRED WITH THE REQUIRED BEDDING, TESTING AND INSPECTION AS REQUIRED BY LOCAL CODES.
5. COORDINATE AND LOCATE ALL EXISTING FOOTINGS BEFORE SAW CUTTING FOR NEW PROPOSED PIPING.
6. EXIST. ROUGHING TO REMAIN. CONFIRM EXACT LOCATION IN FIELD AND COORDINATE WITH KITCHEN EQUIPMENT LAYOUT AND ARCHITECT THE BEST SOLUTION FOR THE WASTE AND VENT PIPING TO REMAIN.
7. RE-BALANCE EXISTING HOT WATER RETURN LOOP AFTER WORK IS PERFORMED AND PROVIDE BALANCING REPORT TO OWNER.
8. PROVIDE AND INSTALL A "MAXITROL" (#325 OR EQUAL) REGULATOR WITH OUTLET PRESSURE OF 5" AND VENT TO THE EXTERIOR CAPABLE OF MAX. LOAD OF 1,110 MBH.
9. PROVIDE AND INSTALL A SOLENOID VALVE SIMILAR TO "ASCO" WITH ELECTRICAL CONNECTION TO FIRE ALARM AND HOOD CONTROL AND A PUSH BUTTON OFF AND RE-SET AS PER LOCAL CODES, SIMILAR TO "ASCO" SERIES 8214 - 8215 AND CONTROL STATION #173A25 FOR EMERGENCY STOP WITH CONTROL WIRING AS REQUIRED FROM HOOD TO STOP AND BACK.
10. COORDINATE EXISTING WATER TABLE BEFORE INSTALLING THE GREASE INTERCEPTORS AND WASTE/VENT PIPING AND PROVIDE ADDITIONAL PIPE SUPPORT FROM THE SLAB TO SECURE PIPING AS REQUIRED. PROVIDE AND INSTALL A CONCRETE FOOTING FOR THE GREASE TRAP FOR SUPPORTS.
11. REMOVE EXISTING 1 1/4" GAS PIPE IN CORRIDOR TO ALLOW FOR DUCT WORK TO BE INSTALLED AND RE-PIPE A NEW FEED MARRIED TO THE EXISTING DOMESTIC WATER PIPING ON OPPOSITE SIDE OF CORRIDOR, WITH NEW SUPPORTS THRU GYP HIGH CEILING TO STRUCTURE (TRAPEZE ON EXISTING RODS SUBJECT TO APPROVAL FROM STRUCTURAL ENGINEER).
PURGE EXISTING PIPE AND PRESSURE TESTED PROPOSED PIPES TO RE-FEED THE 2ND FLOOR SCIENCE ROOM LABORATORY AS REQUIRED. COORDINATE WITH HVAC DUCT WORK BEFORE PERFORMING THE DEMOLITION AND NEW PIPING WORK.
12. COORDINATE WATER BRANCHES WITH HOOD'S DUCT WORK BRANCHES/ DUCT SOFFITS AND ADJUST WATER PIPING AS REQUIRED TO FIT BETWEEN THE 9'-6" CEILING, 10" DEEP DUCT WORK AND 10'-7" UNDERSIDE OF STRUCTURE RIDGES FROM EXISTING CONCRETE PLANKS AS REQUIRED WITH NO ADDITIONAL COST TO THE OWNER.
13. COORDINATE VENT AND WATER PIPING WITH HVAC CLEARANCES AND SERVICE AREA ABOVE THE CEILING BEFORE INSTALLING PIPING AND PROVIDE COORDINATION DRAWING AS REQUIRED.
14. DISCONNECT AND RE-INSTALL AT A HIGHER ELEVATION TO CLEAR HVAC PROPOSED DUCT WORK AS REQUIRED. PROVIDE NEW INSULATION AND SUPPORTS, PRESSURE TESTED, DISINFECTED AND PURGED AS REQUIRED TO RE-INSTATE BACK TO FULL WORKING ORDER.
15. PROVIDE AN ALTERNATE ROUTE IF THE DOOR OPENING HAS A FOOTING AND/OR HAUNCH THAT IS NOT DOABLE WITHOUT LOWERING THE ENTIRE DEPTH OF BURIED.

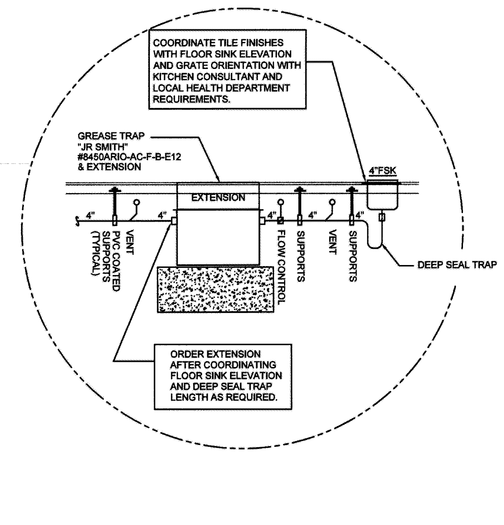

KITCHEN EQUIPMENT NOTE;

CONTRACTOR SHALL PROVIDE FINAL CONNECTIONS TO ALL THE FIXTURES AND EQUIPMENT PROVIDED BY THE KITCHEN EQUIPMENT SUPPLIER AND/OR OWNER PROVIDED INCLUDING BUT NOT LIMITED TO WASTE, VENT, WATER, TRAPS, STRAINER, BASKET STRAINERS UNIONS, STOPS, VACUUM BREAKERS, BACK FLOW PREVENTERS, VALVES, STOPS AND/OR FLEX SUPPLIES AS REQUIRED TO PROVIDE AN INSTALLATION IN FULL WORKING ORDER. EXPOSED PIPING IN KITCHEN AREAS SHALL CHROME PLATED, STAINLESS STEEL, COPPER OR ANTIBACTERIAL FINISHES.

CONTRACTOR SHALL COORDINATE WITH KITCHEN DRAWINGS AND PREPARE AN INSTALLATION SHOP DRAWING OF ALL THE PIPING REQUIRED TO BE INSTALLED WITH-IN THE EQUIPMENT OR BEFORE THE EQUIPMENT IS SET IN PLACE AND PROVIDE ALL THE REQUIRED PIPING, TUBING AND FINAL CONNECTIONS.

PRESSURE TESTING AND ROUGHING INSPECTION SHALL ALSO BE PERFORMED BEFORE THE KITCHEN EQUIPMENT WORK IS SET IN PLACE.

REFER TO THE ARCHITECTURAL DRAWING AND/OR KITCHEN EQUIPMENT SUPPLIER SCHEDULES AND DRAWING FOR ROUGHING PLAN AND COMPLIANCE WITH LOCAL HEALTH DEPARTMENT.

UNDERGROUND COORDINATION;

CONTRACTOR SHALL PROVIDE A COORDINATION DRAWING ILLUSTRATING ALL THE UNDER SLAB PIPING IN SCOPE AND OUT OF SCOPE, INCLUDING BUT NOT LIMITED TO ALL THE TOP OF FOOTING ELEVATION, SLEEVES, SUPPORTS, ANGLES OF REPOSE, SOIL CONDITIONS AND REPORT BEFORE WORK COMMENCES.

COORDINATION DRAWINGS TO BE REVIEWED AND APPROVED BY ALL PARTIES INVOLVED IN THE UNDERGROUND WORK AND ACKNOWLEDGE IN AN ENDORSED LETTER FORM.

LOCAL AUTHORITY HAVING JURISDICTION;

CONTRACTOR SHALL COORDINATE THE STRUCTURE'S UTILITIES WITH THE LOCAL AUTHORITY HAVING JURISDICTION AND CONFORM TO THE LOCAL STANDARDS, GUIDELINES AND REGULATION BUT NOT LIMITED TO AND ADJUST THE PIPING ARRANGEMENT AS REQUIRED FOR COMPLIANCE.

GREASE TRAP SIZING;

2" IW	22.5 GPM
2" IW	22.5 GPM
2" IW	22.5 GPM
TOTAL GPM	67.5 GPM = 150 LBS OF GREASE WITH FLOW CONTROL FITTING AND VENT

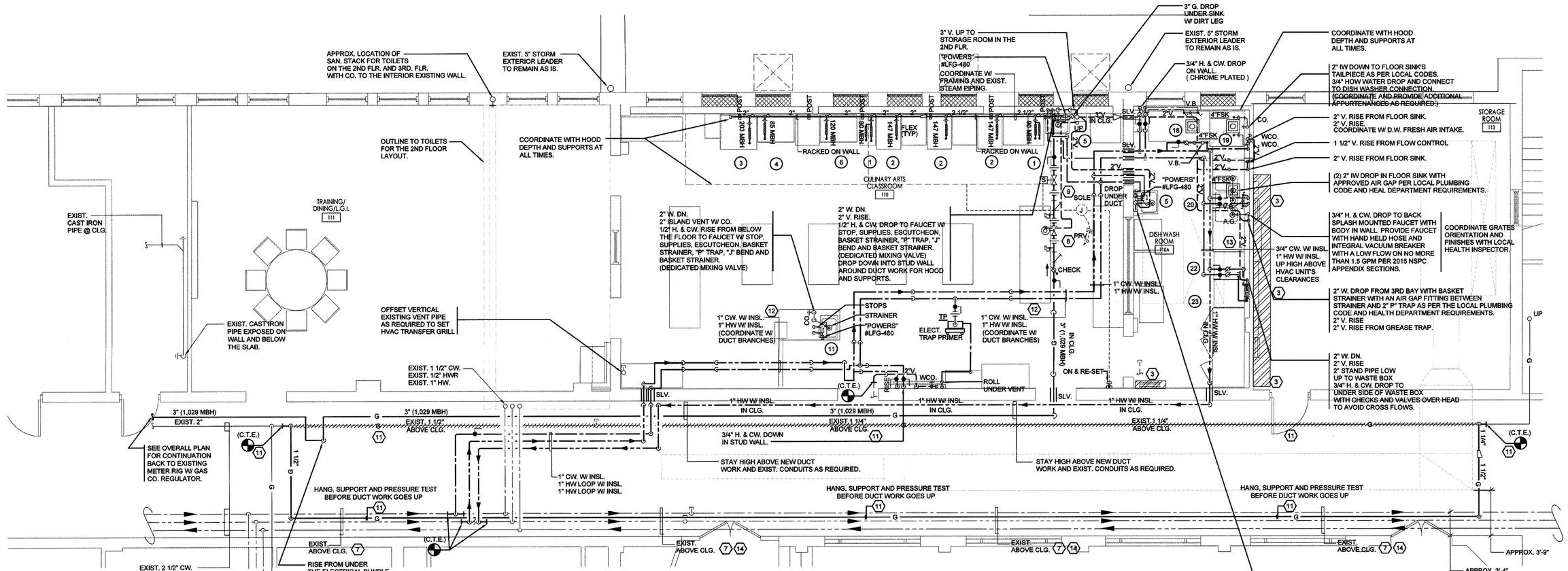

NEW WORK PLAN - OVERHEAD PIPING

SCALE: 1/4" = 1'-0"

PROPOSED NEW GAS LOADS;

#1 FRYER	90 MBH
#1 FRYER	90 MBH
#2 RANGE	147 MBH
#2 RANGE	147 MBH
#2 RANGE	147 MBH
#3 RANGE	203 MBH
#4 GRIDDLE	85 MBH
#6 GRILL	120 MBH
TOTAL LOADS	TOTAL LOAD = 1,029 MBH @ APPROX. 6" WC FOR GAS FIRED KITCHEN EQUIPMENT

GAS SIZING;

ESTIMATED LENGTH OF 200' LF.
ESTIMATED FITTINGS OF 10E = 100 LF.

300 LINEAR FEET TOTAL FOR 1,029 MBH = 3" BRANCH SIZE BASED ON THE 2015 I.F.G.C. TABLE #402.4(2)

OVERHEAD COORDINATION;

CONTRACTOR SHALL PROVIDE A COORDINATION DRAWING ILLUSTRATING ALL THE OVERHEAD DUCT WORK IN SCOPE AND OUT OF SCOPE, INCLUDING BUT NOT LIMITED TO ALL THE BOTTOM OF STEEL, ELEVATION, SLEEVES, SUPPORTS, LIGHTS, KITCHEN HOODS, CEILING FRAMING, GYPSUM FRAMING AND WINDOW FRAMING BEFORE WORK COMMENCES.

COORDINATION DRAWINGS TO BE REVIEWED AND APPROVED BY ALL PARTIES INVOLVED IN THE UNDERGROUND WORK AND ACKNOWLEDGE IN AN ENDORSED LETTER FORM.

ADA NOTE:

CONTRACTOR SHALL REFER TO ARCHITECTURAL DRAWINGS AND DETAILS FOR EXACT MOUNTING HEIGHT AND ELEVATION AT ALL TIMES.

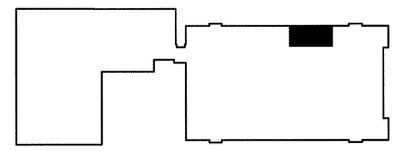

KEY PLAN
SCALE: NONE

JOHN J. VEISZ, AIA, CSBA
NJ - 21AX00440000 | PA - RA018179

WILLIAM D. HOPKINS III, AIA, LEED AP
NJ - 21AX01726000 | PA - RA022504

GEORGER. DUTHIE JR., AIA, PP
NJ - 21AX01297000

FVHDPC.COM

FVHD architects planners
Fraytak Veisz Hopkins Duthie P.C.
Corporate: 1515 Lower Ferry Road - Trenton - New Jersey 08628
Pennsylvania: 140 Whitaker Ave - Mont Clare - Pennsylvania 19453

FRENCH & PARRELLO ASSOCIATES
Corporate Office 1800 Route 34, Suite 101 Wall, NJ 07719 732.312.8800
Regional Offices Hackettstown, NJ New York, NY

KEVIN DWYER, PE
PROFESSIONAL ENGINEER, NJ LIC. No. 24GE03525400

12/20/19
Date
Architect

Project Name
Culinary Arts Classroom Renovation at Wildwood Middle/ High School

Project Owner Name
Wildwood School District

Project Location
4300 Pacific Avenue Wildwood, NJ 08260

Project Number
5059

Project Date
12-20-2019

Checked By

Drawn By

Scale

Drawing Name
PLUMBING NEW WORK PART PLANS

Revisions

No.	Date	Description

Drawing Number
P3.0

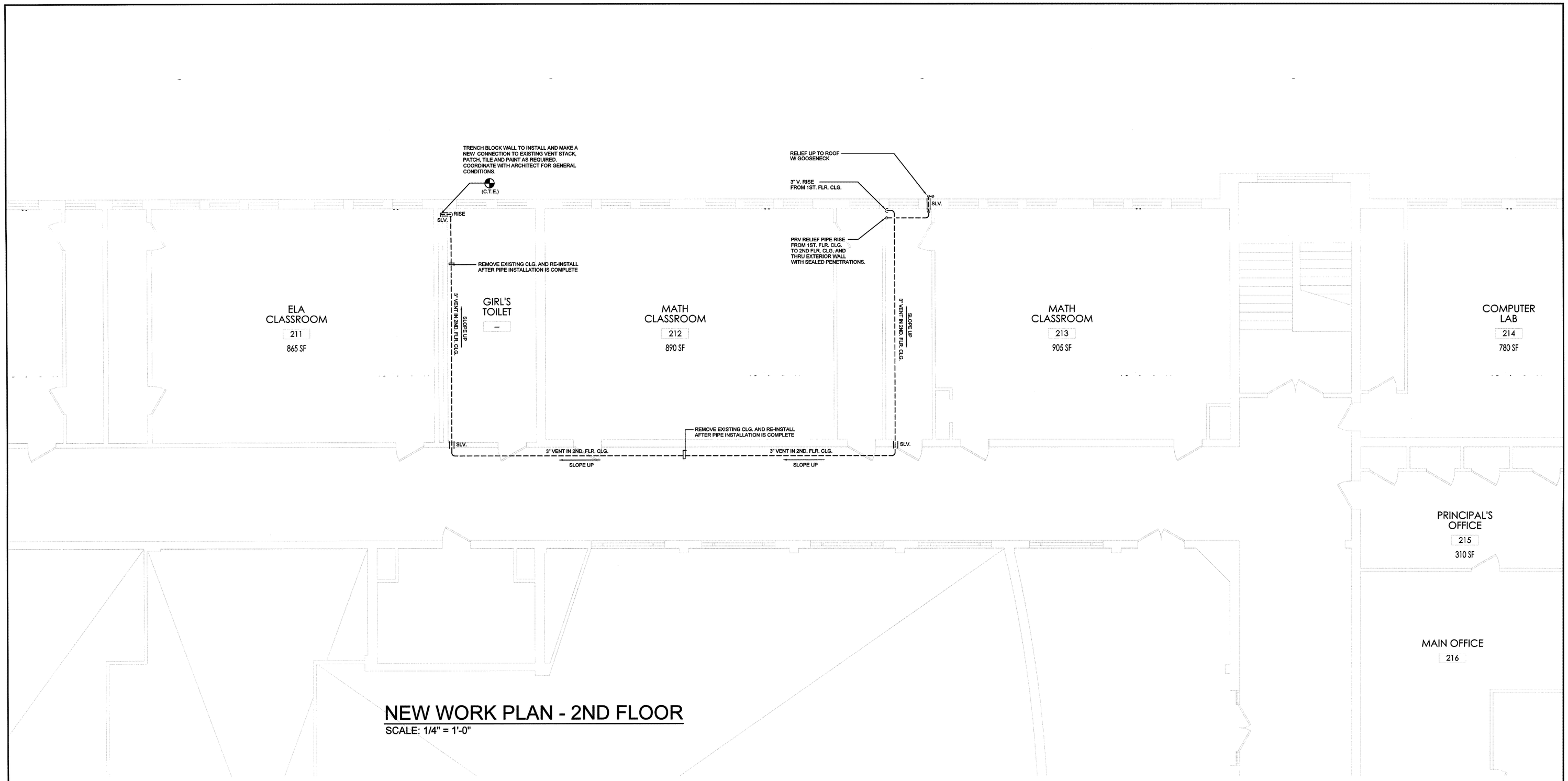

NEW WORK PLAN - 2ND FLOOR

SCALE: 1/4" = 1'-0"

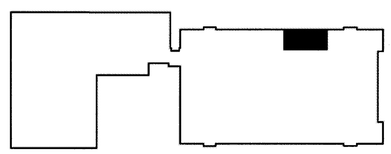

KEY PLAN

SCALE: NONE

FRENCH & PARRELLO ASSOCIATES

Corporate Office
1800 Route 34, Suite 101
Wall, NJ 07719
732.312.9800
Regional Offices
Hackettstown, NJ
New York, NY

KEVIN DWYER, PE
PROFESSIONAL ENGINEER, NJ LIC. No. 24GE03525400

JOHN J. VEISZ, AIA, CSBA
NJ - 21AI00866900 | PA - RA010819B
WILLIAM D. HOPKINS III, AIA, LEED AP
NJ - 21AI01706000 | PA - RA012520X
GEORGE R. DUTHIE JR., AIA, PP
NJ - 21AI01299200
Architect
Date 12/20/19

FVHD architects planners
Fraytak Veisz Hopkins Duthie PC
Corporate: 1515 Lower Ferry Road - Trenton - New Jersey 08628
Pennsylvania: 140 Whitaker Ave - Mont Clare - Pennsylvania 19453
FVHDPC.COM

Project Name
Culinary Arts Classroom Renovation at Wildwood Middle/ High School

Project Owner Name
Wildwood School District

Project Location
4300 Pacific Avenue
Wildwood, NJ
08260

Project Number
5059

Project Date
12-20-2019

Checked By

Drawn By

Scale

Drawing Name
PLUMBING NEW WORK PART PLAN - 2ND FLOOR

Revisions

No.	Date	Description

Drawing Number
P3.1

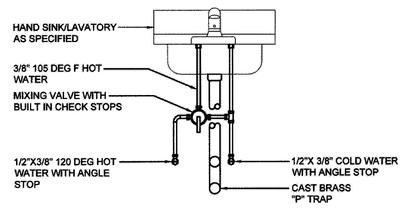

MIXING VALVE AT HAND SINKS AND LAVATORIES
NOT TO SCALE

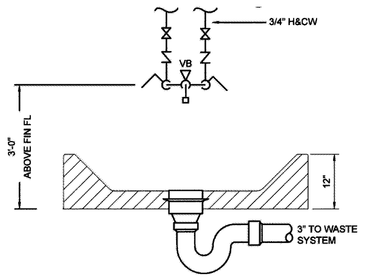

SERVICE SINK DETAIL
NOT TO SCALE

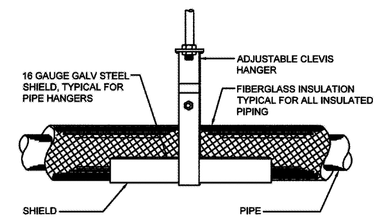

TYPICAL PIPE HANGER DETAIL
NOT TO SCALE

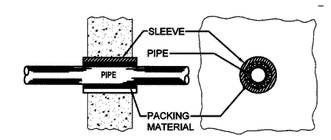

(CONCRETE AND FOUNDATION WALLS)

NOTE:
NO STRUCTURAL STRAIN SHOULD BE TRANSMITTED FROM ANY WALL TO THE PIPING SYSTEM THE SLEEVING, RELIEVING ARCH, OR STRUCTURAL BEAM SUPPORT METHODS PROTECT THE PIPING FROM SUPERIMPOSED LOADS THE "PACKING" MATERIAL AROUND THE PIPE IS FLEXIBLE ENOUGH TO RESPOND TO SETTLING IN THE STRUCTURE OR PIPING

WALL PENETRATION PIPE SLEEVE DETAIL
NOT TO SCALE

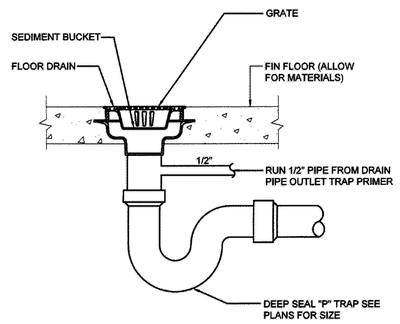

TYPICAL FLOOR DRAIN DETAIL
NOT TO SCALE

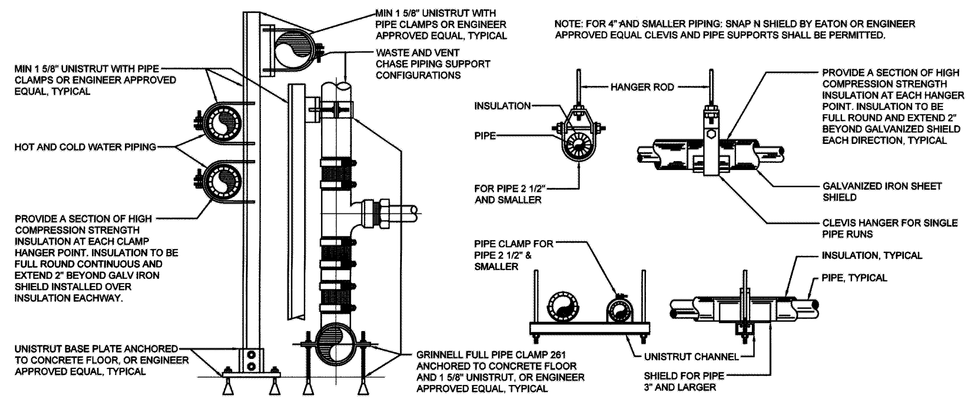

PIPE HANGERS & SUPPORT DETAIL - WATER, WASTE & VENT
NOT TO SCALE

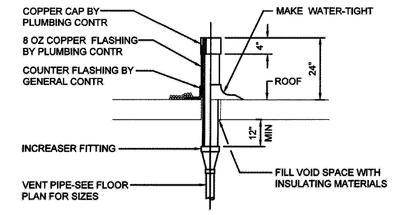

NOTES:
1. MINIMUM SIZE OF VENT EXTENSION THROUGH ROOF TO BE 3".
2. CHANGE OF DIAMETER TO BE MADE AT LEAST 12" BELOW ROOF.
3. VENT PIPE TO EXTEND 24" ABOVE ROOF AND TO BE SEALED WATERTIGHT BY PROPER FLASHING.
4. ALL VENT RISERS SHALL BE OFFSET AS REQUIRED TO CLEAR ROOF STRUCTURE, DUCTWORK OR MECH ROOFTOP UNITS. PLUMBING CONTRACTOR TO COORDINATE WITH OTHER TRADES.
5. ROOFING CONTRACTOR SHALL SUPPLY BOOT FLASHING FOR RUBBER ROOF SYSTEMS.

VENT INCREASER DETAIL
NOT TO SCALE

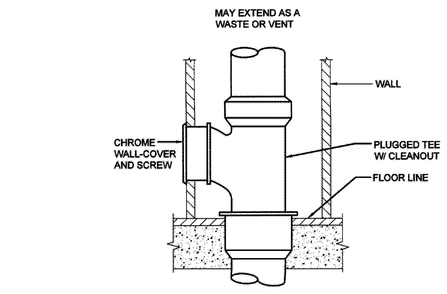

WALL CLEANOUT DETAIL
NOT TO SCALE

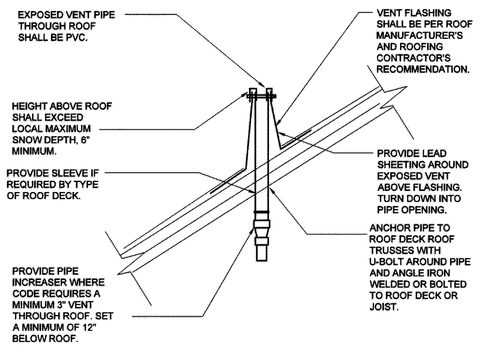

VENT THRU SLOPED ROOF DETAIL
NOT TO SCALE

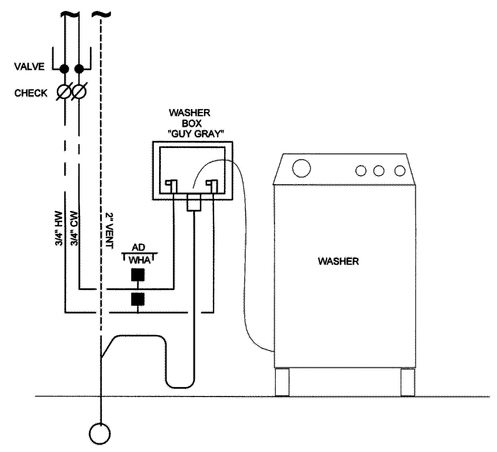

CLOTHE WASHER DETAIL
NOT TO SCALE

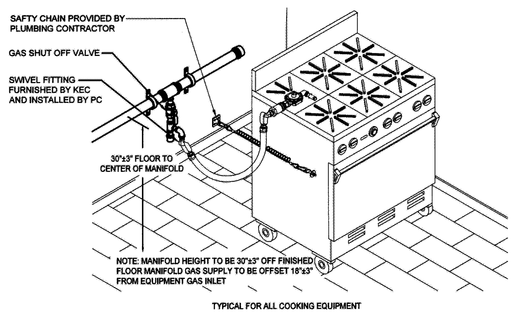

GAS FIRED COOKING EQUIPMENT INSTALLATION DETAIL
NOT TO SCALE

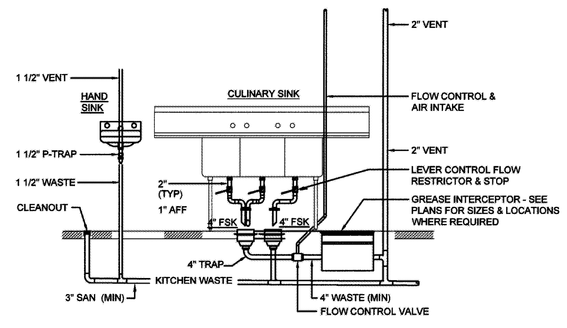

COMPARTMENT SINK DETAIL W/RECESSED GREASE TRAP
NOT TO SCALE

JOHN J. VESZ, AIA, CSBA
NJ - 21AS00660900 | PA - RA018976
WILLIAM D. HOPKINS III, AIA, LEED AP
NJ - 21AI01700000 | PA - RA022520X
GEORGE R. DUTHIE JR., AIA, PP
NJ - 21AI01297200
12/20/19
Architect Date

FVHD architects planners
Fraytak Veisz Hopkins Duthie P C
FVHDPC.COM
Corporate: 1515 Lower Ferry Road - Trenton - New Jersey 08628
Pennsylvania: 140 Whitaker Ave - Mont Clare - Pennsylvania 19453

Project Name
Culinary Arts Classroom Renovation at Wildwood Middle/ High School

Project Owner Name
Wildwood School District

Project Location
4300 Pacific Avenue Wildwood, NJ 08260

Project Number
5059

Project Date
12-20-2019

Checked By

Drawn By

Scale

Drawing Name
PLUMBING DETAILS

Revisions

No.	Date	Description

FRENCH & PARRELLO ASSOCIATES
Corporate Office
1800 Route 34, Suite 101
Wall, NJ 07719
732.312.5800
Regional Offices
Hackettstown, NJ
New York, NY

KEVIN DWYER, PE
PROFESSIONAL ENGINEER, NJ LIC. No. 24GE03624400

Drawing Number
P4.0

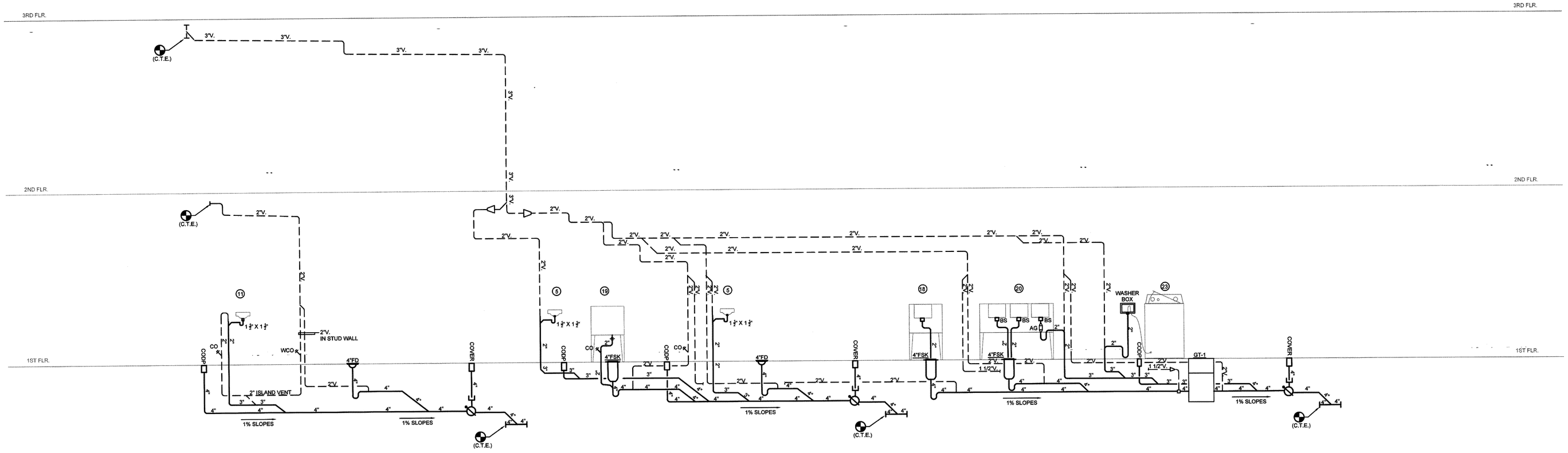

WASTE AND VENT SCHEMATIC RISER DIAGRAM

NOT TO SCALE

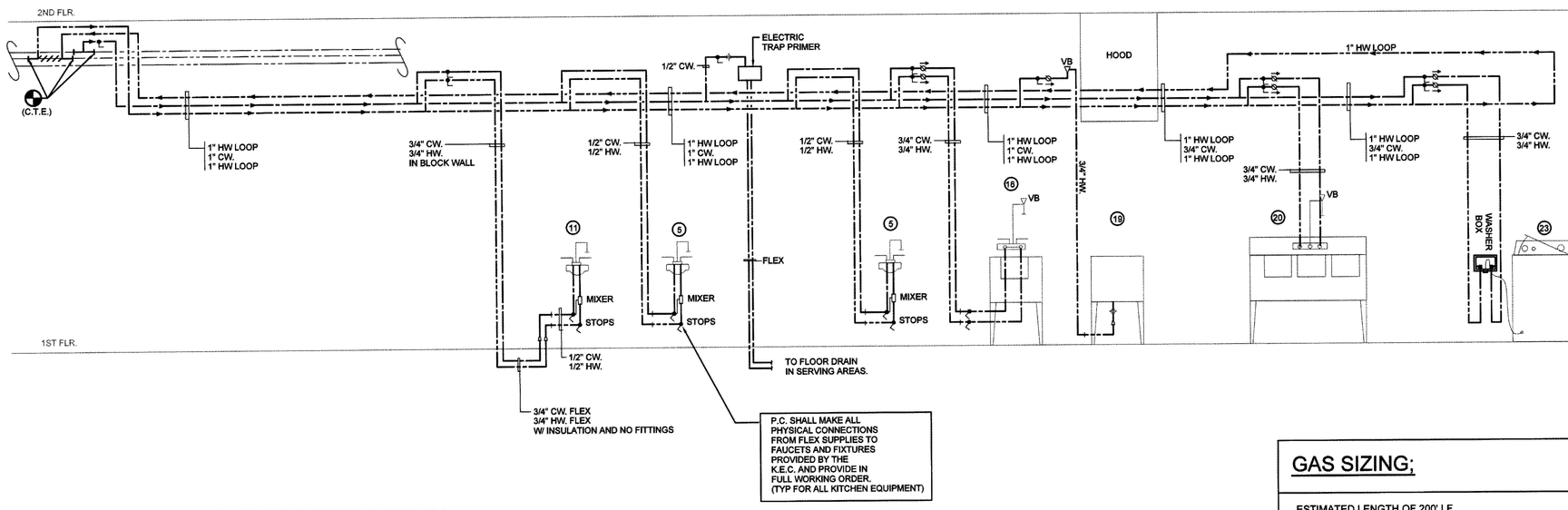

DOMESTIC WATER SCHEMATIC RISER DIAGRAM

NOT TO SCALE

GAS SIZING;

ESTIMATED LENGTH OF 200' LF. ESTIMATED FITTINGS OF 10 E = 100 LF.
300 LINEAR FEET TOTAL FOR 1,029 MBH = 3" BRANCH SIZE BASED ON THE 2015 I.F.G.C. TABLE #402.4(2)

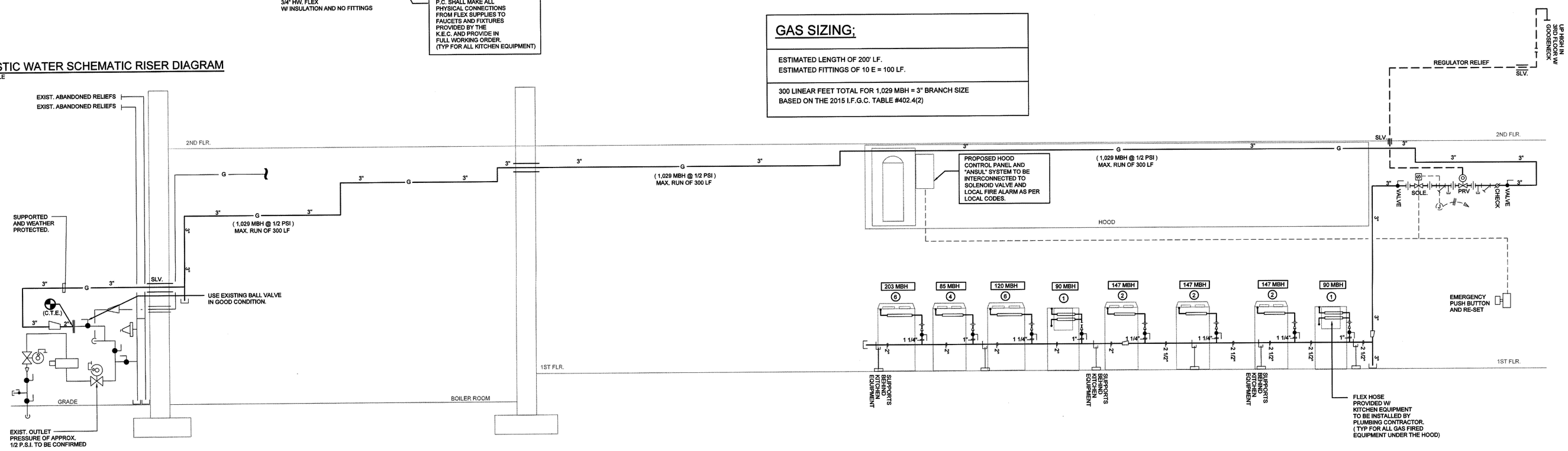

NATURAL GAS SCHEMATIC RISER DIAGRAM

NOT TO SCALE

JOHN J. VERSZ, AIA, CSBA
NJ - 21AI00846000 | PA - RA015199

WILLIAM D. HOPKINS III, AIA, LEED AP
NJ - 21AI01350000 | PA - RA032506

GEORGE R. DUTHIE JR., AIA, PP
NJ - 21AI00379500

12/20/19
Date

Architect

FVHD est. 1915 architects planners
Fraytak Veisz Hopkins Duthie P C
Corporate: 1515 Lower Ferry Road - Trenton - New Jersey 08628
Pennsylvania: 140 Whitaker Ave - Mont Clare - Pennsylvania 19453
F V H D P C . C O M

Project Name
Culinary Arts Classroom Renovation at Wildwood Middle/ High School

Project Owner Name
Wildwood School District

Project Location
4300 Pacific Avenue Wildwood, NJ 08260

Project Number
5059

Project Date
12-20-2019

Checked By

Drawn By

Scale

Drawing Name
PLUMBING RISER DIAGRAMS

Revisions

No.	Date	Description

FPA FRENCH & PARRELLO ASSOCIATES

Corporate Office
1800 Route 34, Suite 101
Wall, NJ 07719
732.312.9800
Regional Offices
Hackettstown, NJ
New York, NY

KEVIN DWYER, PE
PROFESSIONAL ENGINEER, NJ LIC. No. 24GE03625400

Drawing Number
P5.0

MECHANICAL LEGEND

SYMBOLS	DESCRIPTION
	NEW DUCT OR PIPE
	EXISTING DUCT OR PIPE
	TO BE REMOVED
	FLEX TO DIFFUSER (5'-0" MAXIMUM)
R	RISE IN DUCT
D	DROP IN DUCT
FC	FLEXIBLE DUCT CONNECTION
	CEILING DIFFUSER 4 WAY BLOW
	CEILING DIFFUSER 3 WAY BLOW
	CEILING DIFFUSER 2 WAY BLOW
	CEILING DIFFUSER 1 WAY BLOW
	RETURN OR EXHAUST REGISTER
VD	VOLUME DAMPER
FD	FIRE DAMPER AND ACCESS DOOR
M	MOTOR OPERATED DAMPER
SP	DUCT STATIC PRESSURE SENSOR
U	UNDERCUT DOOR
L	LOUVERED DOOR
T	THERMOSTAT
S	SENSOR
H	HUMIDISTAT
SD	DUCT SMOKE DETECTOR
	CONNECT TO EXISTING
X	KEY NOTE DESIGNATION
X / X	TOP: EQUIPMENT DESIGNATION BOTTOM: UNIT NUMBER (E-SIGNIFIES EXISTING)
LPS	LOW PRESSURE STEAM PIPING
LPC	LOW PRESSURE CONDENSATE PIPING
PC	PUMPED CONDENSATE PIPING
CD	CONDENSATE DRAIN PIPING
	SHUT-OFF VALVE
	BALANCE VALVE
	THROTTLING VALVE
M	MOTOR OPERATED VALVE, THREE WAY
M	MOTOR OPERATED VALVE, TWO WAY
	CHECK VALVE
	UNION
	RELIEF VALVE
	PRESSURE GAUGE
	THERMOMETER

MECHANICAL GENERAL NOTES:

1. DO NOT SCALE FROM THESE DRAWINGS.
2. ALL WORK SHALL BE PERFORMED IN ACCORDANCE WITH ALL APPLICABLE AND ADOPTED REGULATIONS INCLUDING BUT NOT LIMITED TO NATIONAL, CITY, STATE, LOCAL CODES AND ORDINANCES WHICH MAY BE IN EFFECT. ALL MECHANICAL MATERIALS, INSTALLATION PROCEDURES AND SYSTEM LAYOUTS SHALL BE APPROVED BY ALL APPLICABLE CODE ENFORCEMENT AUTHORITIES HAVING JURISDICTION. THE MECHANICAL CONTRACTOR SHALL OBTAIN AND PAY FOR ALL NECESSARY PERMITS AND APPROVALS FOR THIS INSTALLATION.
3. THE DRAWINGS HAVE BEEN PRODUCED ENTIRELY ON FPA CADD SYSTEM. ANY OTHER LETTERING, LINES OR SYMBOLS, OTHER THAN PROFESSIONAL STAMPS AND SIGNATURES, HAVE BEEN MADE WITHOUT THE AUTHORIZATION OF FPA AND ARE INVALID.
4. REPRODUCTION OF ANY PORTION OF THE CONTRACT DRAWINGS FOR RESUBMITTAL AS SHOP DRAWINGS IS PROHIBITED. SHOP DRAWINGS PRODUCED IN SUCH A MANNER WILL BE REJECTED AND RETURNED.
5. UPON CONTRACT AWARD, CONTRACTOR SHALL CONTACT LOCAL UTILITY COMPANY TO SCHEDULE ANY UTILITY UPGRADES. CONTRACTOR SHALL BE RESPONSIBLE TO COORDINATE ALL UTILITY UPGRADES, SECURE ALL PERMITS AND INSPECTIONS.
6. ALL CONNECTIONS TO EXISTING BUILDING SERVICES SHALL BE CAREFULLY COORDINATED WITH THE UTILITY CO AND THE OWNER'S SCHEDULE. SERVICE WORK OF THIS NATURE TO OCCUR DURING UNOCCUPIED BUILDING HOURS. THE CONTRACTOR SHALL BE RESPONSIBLE TO ENSURE THAT ALL EXISTING EQUIPMENT IS OPERATIONAL AFTER ANY SHUTDOWN OCCURS.
7. CHANGES OR SUBSTITUTIONS OF EQUIPMENT WILL NOT BE ALLOWED WITHOUT SPECIFIC WRITTEN APPROVAL FROM THE ARCHITECT OR ENGINEER. ALL COSTS RESULTING FROM THE SELECTION OF OTHER THAN SPECIFIED EQUIPMENT SHALL BE BORNE BY THE CONTRACTOR, INCLUDING, BUT NOT LIMITED TO WORK AFFECTING OTHER CONTRACTORS, THE OWNER, OR RE-DESIGN ISSUES.
8. ALL INDICATED WORK SHALL BE PERFORMED BY THE MECHANICAL CONTRACTOR UNLESS OTHERWISE NOTED.
9. DO NOT USE ANY PART OF THE OWNER'S BUILDING AS A SHOP, EXCEPT PARTS DESIGNATED FOR SUCH PURPOSES BY THE OWNER.
10. ALL CONTRACT WORK SHALL BE PERFORMED IN ACCORDANCE WITH ALL REQUIREMENTS OF THE WRITTEN SPECIFICATIONS FOR THIS PROJECT WHICH ARE CONSIDERED TO BE AN INTEGRAL PART OF THE CONTRACT DOCUMENTS. ALL CONTRACTORS AND SUBCONTRACTORS SHALL MAINTAIN (AT THE JOB SITE) AND REFER TO COPIES OF THE WRITTEN SPECIFICATIONS AS PART OF THESE DRAWINGS. REFER TO THE WRITTEN SPECIFICATIONS IN CONJUNCTION WITH THE PLANS FOR FULL PROJECT SCOPE. IN ALL CASES OF DISCREPANCY BETWEEN PLANS AND SPECIFICATIONS, THE MORE STRINGENT REQUIREMENTS SHALL GOVERN AND WHERE IT IS UNCLEAR, SUCH CASES SHALL BE REFERRED TO THE ENGINEER FOR ADJUDICATION.
11. ANY DISCREPANCIES OR INADEQUACIES WITHIN THESE BID DOCUMENTS OR BETWEEN THESE BID DOCUMENTS AND RELATED PLUMBING, ELECTRICAL, FIRE PROTECTION, ARCHITECTURAL, INTERIOR DECOR AND FIELD CONDITIONS SHALL BE BROUGHT TO THE ATTENTION OF THE ARCHITECT AND/OR ENGINEER PRIOR TO BID SUBMISSION.
12. THE CONTRACTOR SHALL VISIT THE SITE PRIOR TO SUBMITTING HIS BID FOR THE PROPOSED WORK. HE SHALL BE RESPONSIBLE TO VERIFY FIELD CONDITIONS. ANY DISCREPANCIES SHALL BE BROUGHT TO THE ATTENTION OF THE ENGINEER PRIOR TO SUBMISSION OF BIDS IN WRITING.
13. THE MECHANICAL CONTRACTOR SHALL REVIEW THESE PLANS AND SPECIFICATIONS, AS WELL AS THE RELATED PLUMBING, ELECTRICAL, ARCHITECTURAL, INTERIOR DECOR AND SITE ENGINEERING DRAWINGS TO BECOME FAMILIAR WITH THE FULL PROJECT SCOPE. DURING THE COURSE OF CONSTRUCTION COORDINATION AND ACTUAL CONSTRUCTION, THE MECHANICAL CONTRACTOR SHALL COOPERATE WITH ALL OTHER CONTRACTORS AND TRADES ON THIS PROJECT TO ENSURE A SMOOTH RUNNING AND CAREFULLY COORDINATED INSTALLATION.
14. THE MECHANICAL CONTRACTOR SHALL REVIEW ALL CONTRACT DOCUMENTS, EXISTING CONDITIONS, AND AS-BUILT CONDITIONS PERTAINING TO THE HVAC SYSTEMS. MECHANICAL CONTRACTOR SHALL PROVIDE ALL EQUIPMENT, MATERIAL, PARTS, SUPPLIES AND LABOR TO BALANCE ALL HVAC EQUIPMENT TO OWNER'S SATISFACTION.
15. CONTRACTOR SHALL COORDINATE HIS SCHEDULING WITH THE OWNER AND GENERAL CONTRACTOR TO COMPLY WITH THE OWNERS USAGE OF THE BUILDING.
16. IF ANY UNEXPECTED DISCOVERY OF SUSPECTED HAZARDOUS MATERIALS IS MADE DURING THE COURSE OF WORK, THE CONTRACTOR SHALL REPORT THE DISCOVERY IMMEDIATELY TO THE OWNER. THE CONTRACTOR SHALL STOP ANY WORK THAT MAY DISTURB THE SUSPECTED HAZARDOUS MATERIAL. CONTRACTOR SHALL RESUME WORK AFTER ALL HAZARDOUS MATERIAL HAS BEEN REMEDIATED.
17. CONTRACTOR RESPONSIBLE FOR THE PROPER CARE OF ALL OWNER'S EQUIPMENT AND/OR FURNISHINGS WHICH ARE REQUIRED TO BE TEMPORARILY REMOVED, STORED OR RELOCATED. CONTRACTOR SHALL REPLACE, REPAIR OR REIMBURSE OWNER FOR ALL DAMAGES TO SUCH PROPERTIES AT FULL REPLACEMENT VALUE AND EQUIVALENCY. CONTRACTOR SHALL ADVISE OWNER FOR DISPOSITION OF REMOVED EQUIPMENT AND/OR MATERIALS.
18. CONTRACTOR'S WORK MAY BE REQUIRED OUTSIDE OF DESIGNATED SPACE. ALL SYSTEMS BEING DEMOLISHED AND REMOVED, MODIFIED, AND/OR TERMINATED SHALL BE FIELD VERIFIED TO INSURE NO WORK PERFORMED, INSIDE OR OUTSIDE OF THE DESIGNATED SPACE, SHALL DISRUPT ANY SERVICE OR SYSTEMS OF ANY OTHER AREAS. IF ANY CONDITIONS ARISE THAT ARE NOT IDENTIFIED ON DRAWINGS, IMMEDIATE NOTIFICATION SHALL BE PROVIDED TO THE ENGINEER OR OWNER. NO WORK SHALL PROCEED WITHOUT APPROVALS FROM ENGINEER OR OWNER.
19. DRAWINGS ARE DIAGRAMMATIC IN NATURE AND MAY HAVE TO BE ADAPTED TO COMPLY WITH EXISTING BUILDING CONDITIONS. CONTRACTOR SHALL SUBMIT HVAC SHOP DRAWINGS, INDICATING LOCATIONS, AND ROUTING OF DUCTS, PIPING, AND WIRING.
20. DUCTING AND PIPING SHOWN ON DRAWINGS SHOW THE GENERAL RUN AND CONNECTIONS AND MAY OR MAY NOT IN ALL PARTS BE SHOWN IN ITS EXACT POSITION. CONTRACTOR SHALL BE RESPONSIBLE FOR ERECTING THE DUCTING/PIPING SUITABLE IN EVERY RESPECT FOR THE WORK. DUCTWORK/PIPING SHALL BE INSTALLED SO THAT ACCESS, CLEARANCE, HEADROOM AND PITCH ARE MAINTAINED. CONTRACTORS OF THE VARIOUS TRADES SHALL COORDINATE THE INSTALLATION. MECHANICAL CONTRACTOR SHALL REVIEW ARCHITECTURAL DRAWINGS FOR CHASE AND SOFFIT LOCATIONS TO COORDINATE ALL EXPOSED DUCTWORK & PIPE ROUTING.
21. ALL CONTRACTORS SHALL PROVIDE CUTTING AND PATCHING FOR THEIR RESPECTIVE TRADES.
22. REMOVE AND REINSTALL CEILING SYSTEM AS REQUIRED FOR THE INSTALLATION OF MECHANICAL WORK AND REPLACE IN KIND ANY COMPONENTS DAMAGED BY PERSONNEL OR EQUIPMENT DURING PERFORMANCE OF THE WORK. PATCH AND REPAIR ALL DAMAGE CAUSED BY REMOVAL. MATCH EXISTING ADJACENT SURFACES.
23. ALL MECHANICAL EQUIPMENT AND APPLIANCES SHALL BEAR THE LABEL OF AN APPROVING AGENCY, LISTING AND LABELING AGENCY QUALIFICATIONS: A "NATIONALLY RECOGNIZED TESTING LABORATORY" AS DEFINED IN THE INTERNATIONAL MECHANICAL CODE, LATEST ADOPTED EDITION.
24. ALL PENETRATIONS THRU FIRE RATED WALLS, FLOORS, AND CEILINGS SHALL BE SEALED WITH A UL APPROVED FIRESTOP MATERIAL SUITABLE FOR CONSTRUCTION MATERIAL TO MAINTAIN FIRE, SMOKE, AND DRAFT INTEGRITY OF STRUCTURE. FIRE RESISTANT SEALER SHALL BE TESTED IN ACCORDANCE WITH ASTM E84. INSTALL SEALANT, INCLUDING FOAMING, PACKING AND OTHER ACCESSORY MATERIALS TO FILL OPENINGS WHERE FIRE-RATED WALL PENETRATIONS OCCUR. COMPLY WITH INSTALLATION REQUIREMENTS ESTABLISHED BY TESTERS AND INSPECTION AGENCY.
25. ALL CONTRACTORS REMOVING OR RELOCATING ANY EQUIPMENT, PIPES, DUCTS, CONDUITS, ETC SHALL PATCH ALL SURFACES DISTURBED BY THIS WORK TO MATCH ADJACENT SURFACES.
26. MECHANICAL CONTRACTOR SHALL BE RESPONSIBLE FOR THE PROPER HANDLING, DISPOSAL & ASSOCIATED COSTS OF ALL REFRIGERANT MATERIAL, DURING THIS CONTRACT, IN ACCORDANCE WITH ALL FEDERAL, STATE AND LOCAL CODES AND/OR REGULATIONS.
27. THE MECHANICAL CONTRACTOR SHALL MOUNT THE DUCT SMOKE DETECTOR. THE ELECTRICAL CONTRACTOR TO PROVIDE AND WIRE DUCT MOUNTED SMOKE DETECTOR. ELECTRIC CONTRACTOR SHALL ALSO PROVIDE AND WIRE A REMOTE MONITORING KEY OPERATED TEST AND ALARM STATION FOR EACH DUCT SMOKE DETECTOR. THE REMOTE TEST ALARM STATION SHALL BE MOUNTED AS DIRECTED IN THE AREA OF THE SMOKE DETECTOR.
28. THE MECHANICAL CONTRACTOR TO PROVIDE ALL ROOF CURBS, EQUIPMENT RAILS, SUPPORTS, ROOF PORTALS, AND ASSOCIATED EQUIPMENT TO ENSURE A COMPLETE INSTALLATION FOR NEW HVAC EQUIPMENT. MECHANICAL CONTRACTOR RESPONSIBLE TO PROVIDE EXACT LOCATIONS AND REVIEW AND RELEASED EQUIPMENT SUBMITTALS, OF ROOF CURBS, EQUIPMENT SUPPORTS, ROOF PORTALS, AND ASSOCIATED EQUIPMENT TO THE ARCHITECT. ALL ROOF PENETRATIONS, EQUIPMENT SUPPORTS, ROOF PORTALS AND ASSOCIATED EQUIPMENT SHALL BE INSTALLED BY ROOFING SUB-CONTRACTOR. ROOFING CONTRACTOR SHALL BE BONDED AND ALL WORK SHALL BE DONE SO AS NOT TO VOID ROOF WARRANTY. ROOFING CONTRACTOR SHALL PROVIDE BASE FLASHING, AND PROVIDE TEMPORARY WEATHER-PROOF COVERS UNTIL MECHANICAL CONTRACTOR INSTALLS NEW HVAC UNITS. MECHANICAL CONTRACTOR TO PROVIDE COUNTER FLASHING.
29. FURNISH TO THE ELECTRICAL CONTRACTOR ALL MOTOR STARTERS AND CONTROL DEVICES FOR MECHANICAL EQUIPMENT. ELECTRICAL CONTRACTOR SHALL INSTALL AND WIRE STARTER AND CONTROL EQUIPMENT FOR ALL MOTORS.
30. CONTRACTOR SHALL BE RESPONSIBLE TO PROVIDE ALL CONTROLLERS, ACTUATORS, TRANSFORMERS, SENSORS, RELAYS, CONTACTS, PANELS, CONDUIT, WIRING, ETC AS REQUIRED TO ACHIEVE SPECIFIED CONTROL SEQUENCE.
31. ALL SPACE SENSORS; IE. TEMPERATURE, CARBON DIOXIDE, HUMIDITY, ETC., SHALL BE MOUNTED AT 48" AFF TO MEET ADA REQUIREMENTS.

    PROVIDE TAMPER PROOF COVERS FOR ALL TEMPERATURE SENSORS. PROVIDE TG500 SERIES VENTED GUARD, CLEAR; OR ENGINEER APPROVED EQUAL, ON ALL TEMPERATURE SENSORS. AVAILABLE FROM WWW.KELE.COM, 888-397-5353.

    PROVIDE WIRE GUARD COVERS ON ALL SPACE SENSORS, BASIS-OF-DESIGN AMERICAN TIME INTEGRATED SOLUTIONS; OR ENGINEERED APPROVED EQUAL. AVAILABLE FROM WWW.AMERICAN-TIME.COM, 800-328-8996.
32. ALL EXPOSED HORIZONTAL AND VERTICAL PIPING SHALL BE INSTALLED IN A NEAT ARRANGEMENT IN LOCATIONS WHICH ARE THE MOST INCONSPICUOUS. VERTICAL DROPS SHALL BE KEPT TO AN ABSOLUTE MINIMUM AND THEIR FINAL LOCATIONS SHALL BE COORDINATED AND RUN WITHIN CHASES, WALLS OR SOFFITS WITH OTHER PLUMBING/ ELECTRICAL FEEDS. MECHANICAL CONTRACTOR SHALL REVIEW ARCHITECTURAL DRAWINGS FOR CHASE & SOFFIT LOCATIONS TO COORDINATE ALL EXPOSED PIPING ROUTING. PROVIDE PIPE ENCLOSURE FOR ALL EXPOSED PIPING LOCATED OUTSIDE THE MECHANICAL ROOM. ALL SUCH LOCATIONS SHALL BE REVIEWED WITH ARCHITECT/ENGINEER PRIOR TO INSTALLATION.
33. ALL PIPING, EXCEPT IN MECHANICAL ROOMS SHALL BE ORGANIZED NEATLY AND KEPT TIGHT TO WALLS AND CEILINGS.
34. FURNISH AND INSTALL PIPE SLEEVES OR SLEEVE SEAL SYSTEMS AS REQUIRED. SEE SPECIFICATION FOR DETAILS.
35. GRAVITY CONDENSATE PIPING SHALL BE PITCHED MINIMUM 1/8" PER FOOT.
36. ALL DUCTWORK SHALL BE CONNECTED TO MOTORIZED EQUIPMENT WITH FLEXIBLE DUCT CONNECTORS.
37. ALL RECTANGULAR RIGID DUCTWORK SHALL BE CONSTRUCTED OF GALVANIZED SHEET STEEL. FABRICATION OF DUCTWORK AND INSTALLATION SHALL BE IN ACCORDANCE WITH SMACNA STANDARDS AND RECOMMENDATIONS.
38. ALL DUCTWORK SIZES SHOWN ON DRAWINGS ARE CLEAR INTERNAL DIMENSIONS.
39. ALL INTERIOR RECTANGULAR DUCTWORK SHALL HAVE DUCT LINER. SEE SPECIFICATION FOR DETAILS.
40. ALL INTERIOR ROUND DUCTWORK EXPOSED WITHIN FINISHED SPACES SHALL BE FACTORY FABRICATED DOUBLE WALLED SPIRAL SEAM WITH INTERSTITIAL INSULATION. SEE SPECIFICATION FOR DETAILS.
41. ALL INTERIOR ROUND DUCTWORK CONCEALED OR EXPOSED IN NON-FINISHED AREA, EG ATTIC, ABOVE CEILING, ETC. SHALL BE SINGLE WALLED SPIRAL SEAM EXTERNALLY INSULATED WITH FLEXIBLE DUCTWRAP AND VAPOR BARRIER. SEE SPECIFICATIONS FOR DETAILS.
42. ALL FLEXIBLE DUCTWORK SHALL BE CLASS I, LABELED UL 181. SEE SPECIFICATIONS FOR DETAILS.
43. ALL EXTERIOR DUCTWORK SHALL HAVE DUCT LINER AND EXTERNAL RIGID INSULATION AND BE COVERED WITH SELF ADHERING PREFABRICATED PROTECTIVE MEMBRANE THAT IS UV AND OZONE RESISTANT. THIS JACKETING SHALL BE FIELD APPLIED IN ACCORDANCE WITH MANUFACTURER'S RECOMMENDATIONS. SEE SPECIFICATION FOR DETAILS.
44. DURING THE INSTALLATION OF MECHANICAL EQUIPMENT AND ASSOCIATED SYSTEMS, THE CONTRACTOR SHALL IDENTIFY ANY DAMAGE TO FIREPROOFING MATERIAL CAUSED BY WORK OF THE TRADE. THE CONTRACTOR SHALL PROVIDE WRITTEN REPORT DESIGNATION LOCATIONS, TO GENERAL CONTRACTOR, BEFORE FIREPROOFING IS COVERED BY SUBSEQUENT CONSTRUCTION.
45. THE MECHANICAL CONTRACTOR SHALL PROVIDE A COMPLETE SET OF "AS-BUILT" DRAWINGS INDICATING THE PRECISE LOCATION OF ALL SYSTEMS, EQUIPMENT, DUCTWORK, PIPING AND ACCESS DOORS. THESE PLANS SHALL ALSO INCLUDE ALL CHANGES AND DEVIATIONS FROM BID DOCUMENTS.

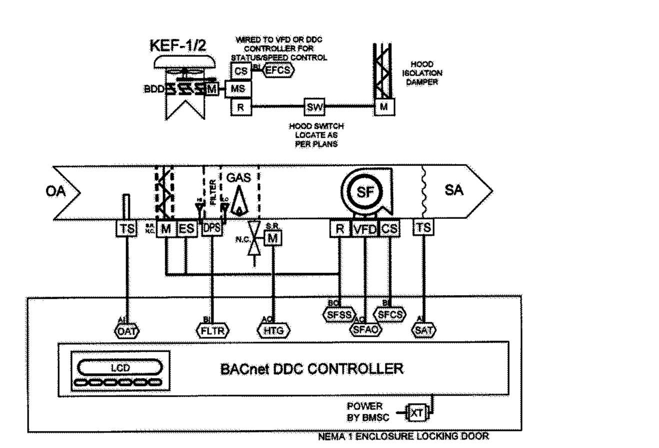

ATC DIAGRAM - MAU-1 TEMPERATURE CONTROL
NOT TO SCALE
STEAM HEATING

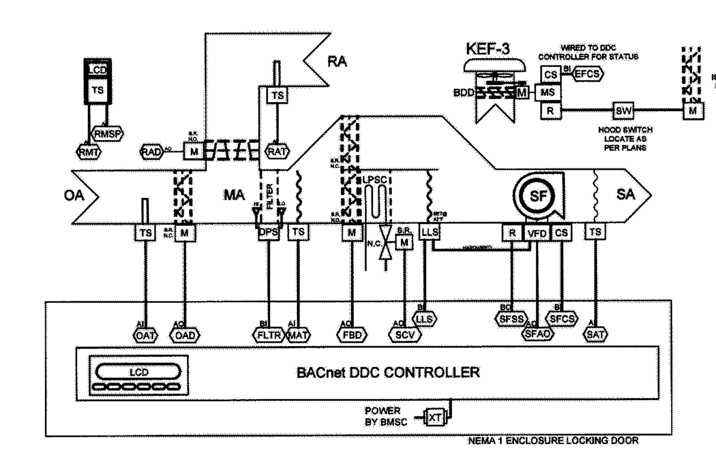

ATC DIAGRAM - AHU-1 TEMPERATURE CONTROL
NOT TO SCALE
STEAM HEATING

- AQ — AQUASTAT (SPDT)
- AFS — AIR FLOW STATION (ANALOG)
- FS — FLOW SWITCH (DIGITAL)
- M — CONTROL ACTUATOR CONTROL DAMPER OR VALVE
- DPS — DIFFERENTIAL PRESSURE SWITCH (SPDT)
- DPT — DIFFERENTIAL PRESSURE TRANSDUCER (ANALOG)
- SHIELDED CABLE - 2 CONDUCTOR - PLENUM RATED #18 AWG MINIMUM) ATC CONTRACTOR SHALL SIZE CONTROL & POWER WIRING (# CONDUCTORS, #AWG, LENGTH, ETC.)
- ES — END SWITCH (SPST)
- RH — RELATIVE HUMIDITY SENSOR
- CO — CARBON-MONOXIDE SENSOR
- CO2 — CARBON-DIOXIDE SENSOR
- IAQ — INDOOR AIR QUALITY
- MS — MAGNETIC STARTER
- VFD — VARIABLE FREQUENCY DRIVE
- R — CONTROL RELAY(24VAC-SPDT)
- CT — CURRENT TRANSDUCER (ANALOG)
- CS — CURRENT SWITCH (DIGITAL)
- TS — TEMPERATURE SENSOR (PROBE/IMMERSION)
- TS — TEMPERATURE SENSOR (AVERAGING)
- LLS — LOW-LIMIT TEMPERATURE SWITCH (SPDT)
- SD — SMOKE DETECTOR (DUCT)
- TC — THERMOSTAT SWITCH (SPDT)
- XFMR — ###VAC-24VAC TRANSFORMER

ATC LEGEND
NOT TO SCALE

APPLICABLE CODES:

ALL WORK SHALL BE IN STRICT ACCORDANCE WITH THE LATEST CODES AND SUBCODES AS ADOPTED BY THE STATE OF NEW JERSEY:

- NEW JERSEY UNIFORM CONSTRUCTION CODE (NJUCC)
- REHABILITATION SUBCODE 5:23-6
- ADMINISTRATIVE CODE: TITLE 6
- 2018 INTERNATIONAL BUILDING CODE - NJ EDITION
- 2017 NATIONAL ELECTRICAL CODE
- 2018 NATIONAL STANDARD PLUMBING CODE
- 2018 INTERNATIONAL MECHANICAL CODE
- 2018 INTERNATIONAL FUEL GAS CODE
- 2016 ASHRAE 90.1 ENERGY CONSERVATION CODE
- 2016 NFPA 13
- REQUIREMENTS OF LOCAL AUTHORITY HAVING JURISDICTION

VENTILATION SCHEDULE

ROOM NO	ROOM NAME	AREA SQ FT	PROGRAM OCCUPANT LOAD	OUTSIDE AIR PER PERSON REQUIRED	OUTSIDE AIR PER SF REQUIRED	OUTSIDE AIR REQUIRED CFM	SPACE VENT EFFECT	REQUIRED OUTDOOR AIR CFM	ACTUAL CFM: OUTSIDE AIR	SUPPLY AIR	EXH AIR	RETURN AIR	TRANSF AIR	EQUIPMENT SERVING SPACE
111	TRAINING / DINING / L.G.I	810	25	10	0.12	347.20	0.8	434.00	330	1000	-	670	-	UNIT VENTILATOR
110	CULINARY ARTS CLASSROOM	958	25	10	0.12	364.96	0.8	456.20	6800	7700	6300	1400	-	MAU-1 / AHU-1
110A	DISH WASH ROOM	221	0	10	0.12	26.52	0.8	33.15	200	600	600	-	-	AHU-1
113	STORAGE	498	0	0	0	0.00	0.8	0.00	-	-	-	-	-	-

NOTES:
1. BASED ON 2015 INTERNATIONAL MECHANICAL CODE (IMC), TABLE 403.3, MINIMUM VENTILATION RATES.
2. ASHRAE VENTILATION STANDARD STANDARD 62.1 IS USED AS A SECONDARY REFERENCE SOURCE IF A PARTICULAR ROOM IS NOT INCLUDED IN THE IMC.

MECHANICAL ABBREVIATIONS

AFF	ABOVE FINISHED FLOOR	IOM	INSTALLATION AND OPERATION MANUAL
AD	ACCESS DOOR	MC	MECHANICAL CONTRACTOR
ATC	AUTOMATIC TEMPERATURE CONTROLS	MOD	MOTOR OPERATED DAMPER
BDD	BACKDRAFT DAMPER	NAE	NETWORK AUTOMATION ENGINE
BMS	BUILDING MANAGEMENT SYSTEM	OAI	OUTDOOR AIR INTAKE
BOD	BOTTOM OF DUCT	OC	ON CENTER
BOP	BOTTOM OF PIPE	PC	PLUMBING CONTRACTOR
CD	CEILING DIFFUSER	RP	RADIANT PANEL
CO	CLEANOUT	RR	RETURN REGISTER
CFM	CUBIC FEET PER MINUTE	RR	RETURN GRILLE
D	DIAMETER	SG	SUPPLY GRILLE
E	EXISTING	SR	SUPPLY REGISTER
EC	ELECTRICAL CONTRACTOR	TG	TRANSFER GRILLE
EG	EXHAUST GRILLE	WMS	WIRE MESH SCREEN
EG	EXHAUST REGISTER	WR	WALL REGISTER

AIR HANDLING UNIT SCHEDULE

AHU / X

PLAN NO.	MANUFACTURER MODEL	LOCATION	AREA SERVED	MIN OA CFM	SUPPLY FAN: AIRFLOW CFM	ESP IN. H20	MOTOR HP	MOTOR RPM	STEAM HEATING COIL: TOTAL MBH	EAT DB °F	LAT DB °F	NO. ROWS	FINS/ IN.	FA SQ FT	AIR PD IN. WG	LBS/ HR	PSI	COND/ LBS	FILTERS: TYPE	MIN MERV RATING	ELECTRICAL: VOLTS/Ø	MCA	MOP	WEIGHT LBS	REMARKS
AHU-1	DAIKIN CAH004GHAC	DISH WASH ROOM 110A	CULINARY ARTS CLASSROOM 110	700	2,000	1.25	1.5	1750	164.1	42.3	118.1	3	12	2.48	0.11	92.0	2.0	92.0	PLEATED	8	208	6.9	15.0	574	SEE NOTES

NOTES:
1. MOUNT UNIT FROM STRUCTURE VIA X POINTS WITH VIBRATION ISOLATION SUPPORT RODS AND MOUNTING BRACKETS AS PER MANUFACTURER'S RECOMMENDATIONS.
2. PROVIDE DRAIN PAN WITH UL #508 APPROVED WATER DETECTION SENSOR FOR UNIT SHUTDOWN. WIRE CONTROL CIRCUIT THROUGH NC CONTACT.
3. PROVIDE UNIT MOUNTED NON-FUSED DISCONNECT SWITCH.
4. PROVIDE POWERED CONVENIENCE RECEPTACLE (ALWAYS HOT) WITH CIRCUIT PROTECTION.
5. PROVIDE HINGED ACCESS DOORS.
6. PROVIDE RETURN AIR SMOKE DETECTOR WIRED TO SHUT DOWN UNIT WITH ACCESSORY REMOTE KEY OPERATED TEST STATION. LOCATE TEST STATION NEAR THERMOSTAT.
7. PROVIDE MINIMUM 2" THICK R-8 RIGID INSULATION AFFIXED TO ENTIRE BOTTOM OF UNIT WITH ADHESIVE AND MECHANICAL FASTENERS. COVER INSULATION WITH VENTURE TAPE MODEL 1577CW OR EQUAL EXTERIOR MEMBRANE WRAP INSTALLED IN ACCORDANCE WITH MANUFACTURER'S RECOMMENDATION.

GAS FIRED MAKE-UP AIR UNIT SCHEDULE

MUA / X

PLAN NO	MANUFACTURER MODEL	VOLUME CFM	BLOWER	HOUSING	TOTAL SP IN. WG	FAN RPM	GAS TYPE	GAS PRESS IN. WC	TEMP RISE °F	ENERGY: INPUT MBH	OUTPUT MBH	AFUE %	MOTOR INFORMATION: SIZE HP	VOLTS/Ø	FLA	MOP	WEIGHT LBS	REMARKS
1	CAPTIVEAIRE A3-D.750-G18	6300	G18-PB	A3-D.750	0.5	749	NATURAL	7 - 14	56	409.7	376.9	92	5	208/3 - -	14.5	30	864	SEE NOTES

NOTES:
1. PROVIDE MANUFACTURERS 24" EQUIPMENT CURB.
2. PROVIDE ELECTRIC DISCONNECT AND SPEED CONTROLLER.
3. INTERLOCK THE UNIT WITH ASSOCIATED KITCHEN EXHAUST FANS.
4. PROVIDE REQUIRED INTERFACE TO HOOD CONTROL SYSTEM/PANELS, BUILDING DIRECT DIGITAL CONTROL SYSTEM (BUILDING MANAGEMENT SYSTEM OR BMS), & FIRE ALARM/ANSUL SYSTEMS, & ASSOCIATED HOOD/KITCHEN EXHAUST FANS.

FAN SCHEDULE

EF / X

PLAN NO	MANUFACTURER MODEL	LOCATION	AREA SERVED	FAN TYPE	FAN PERFORMANCE: CFM	ESP	FAN RPM	ELECTRICAL DATA: HP/ WATTS	RPM	VOLTS/Ø	DRIVE	dBA	WEIGHT LBS	REMARKS
KEF-1	CAPTIVEAIRE USBI24DD-RM	SEE PLAN	KITCHEN HOOD	CENTRIFUGAL	3,150	1.75	892	3	1750	208/3	DIRECT	16.4	725	SEE NOTES 2-5
KEF-2	CAPTIVEAIRE USBI24DD-RM	SEE PLAN	KITCHEN HOOD	CENTRIFUGAL	3,150	1.75	892	3	1750	208/3	DIRECT	16.4	725	SEE NOTES 2-5
KEF-3	CAPTIVEAIRE DU33HFA	SEE PLAN	DISH WASHER	CENTRIFUGAL	600	0.35	1093	1/3	1750	115/1	DIRECT	8.5	72	SEE NOTES 1-2

NOTES:
1. PROVIDE WEATHER PROOF ELECTRICAL DISCONNECT, WALL MOUNT KIT, HIGH HEAT OPERATION 300°F, VIBRATION ISOLATION SUPPORT RODS WITH MOUNTING BRACKETS, SPEED CONTROLLER AND ROUND DUCT CONNECTION.
2. PROVIDE CONTROLS FROM ATC CONTRACTOR.
3. PROVIDE ROOF MOUNTED SUPPORT RAILS AND SPRING ISOLATORS AS PER MANUFACTURER'S RECOMMENDATION.
4. PROVIDE FAN WITH VARIABLE SPEED CONTROL, WEATHERPROOF DISCONNECT, THERMAL OVERLOAD PROTECTION, HIGH HEAT OPERATION 350 °F, GREASE CLASSIFICATION TESTING, 2" DRAIN, MOTOR WEATHER COVER, 24" DISCHARGE EXTENSION, VERTICAL DISCHARGE AND UTILITY SET GREASE CUP.
5. INTERLOCK THE KEF-1 AND KEF-2 TO MAU-1.

LOUVER SCHEDULE

L / X

PLAN NO	MANUFACTURER MODEL	TYPE	SERVICE	AIRFLOW CFM	FREE AREA SF	VELOCITY FPM	AIR PRESS DROP IN WC	DIMENSIONS: DEPTH IN	WIDTH IN	HEIGHT IN	REMARKS
L-1	GREENHECK	ESD-635	INTAKE	700	9	78	0.001	6	36	60	SEE NOTES

NOTES:
1. PROVIDE 2-COAT 70% KYNER 500 FINISH. ARCHITECT TO SELECT COLOR.
2. PROVIDE BIRDSCREEN.
3. PROVIDE LINTEL.
4. THE BEGINNING POINT OF WATER PENETRATION IS 1007 FPM.
5. LOUVERS ARE ACMA CERTIFIED.

AIR DEVICES SCHEDULE

BASED ON TITUS CO

PLAN NO.	CFM RANGE	NECK SIZE	OVERALL SIZE	MANUFACTURER MODEL	REMARKS	PLAN NO.	CFM RANGE	NECK SIZE	OVERALL SIZE	MANUFACTURER MODEL	REMARKS
CD	0-100	6" DIA	12x12	OMNI	SEE NOTES 1 & 6-7	RR/ER	0-100	6" DIA	12x12	PAR	SEE NOTES 2 & 6-7
CD	101-225	8" DIA	12x12	OMNI	SEE NOTES 1 & 6-7	RR/ER	101-200	10x10	12x12	PAR	SEE NOTES 2 & 6-7
CD	0-100	6" DIA	24x24	OMNI	SEE NOTES 1 & 6-7	RR/ER	0-200	8" DIA	24x24	PAR	SEE NOTES 2 & 6-7
CD	101-225	8" DIA	24x24	OMNI	SEE NOTES 1 & 6-7	RR/ER	201-275	10" DIA	24x24	PAR	SEE NOTES 2 & 6-7
CD	226-360	10" DIA	24x24	OMNI	SEE NOTES 1 & 6-7	RR/ER	276-400	12" DIA	24x24	PAR	SEE NOTES 2 & 6-7
CD	361-600	12" DIA	24x24	OMNI	SEE NOTES 1 & 6-7	RR/ER	401-550	14" DIA	24x24	PAR	SEE NOTES 2 & 6-7
CD	601-750	14" DIA	24x24	OMNI	SEE NOTES 1 & 6-7	RR/ER	551-700	16" DIA	24x24	PAR	SEE NOTES 2 & 6-7
CD	751-900	15" DIA	24x24	OMNI	SEE NOTES 1 & 6-7	RR/ER	701-1100	18x18	24x24	PAR	SEE NOTES 2 & 6-7
SR	SEE PLANS	-	SEE PLANS	300RL	SEE NOTES 3 & 6-7	RR/ER	1101-1350	22x22	24x24	PAR	SEE NOTES 2 & 6-7
SR1	SEE PLANS	-	SEE PLANS	S300FS	SEE NOTES 5 & 6-7	RR/ER	1351-3000	22x46	24x48	PAR	SEE NOTES 2 & 6-7
LD-1	60/LF	-	2"-2SLOT	FL-20	SEE NOTES 6-8	RR1/ER1	SEE PLANS	-	SEE PLANS	350RL	SEE NOTES 4 & 6-7
LD-2	95/LF	-	2"-2SLOT	FL-20	SEE NOTES 6-8	LD-R	-	-	2"-2SLOT	FL-20	SEE NOTES 6-8
LD-3	120/LF	-	3"-2SLOT	FL-30	SEE NOTES 6-8						

NOTES:
1. PROVIDE FRAME WITH ACCESSORIES FOR T-BAR LAY-IN DROPPED CEILING GRID OR SURFACE MOUNTED BORDER FOR GYPSUM CEILING APPLICATION. SEE DRAWINGS FOR MOUNTING LOCATION. PROVIDE ACCESSORY ROUND BACK ADAPTER (SIZE AS INDICATED IN SCHEDULE) AND EQUALIZING GRID PROVIDE OPTIONAL DIRECTIONAL BLOW CLIPS WHERE INDICATED ON DRAWINGS. PROVIDE AND INSTALL R-6 FOIL-BACKED INSULATION ON 12x12 MODULE. PROVIDE FACTORY INSTALLED R-6 FOIL-BACKED INSULATION ON 24x24 MODULE.
2. PROVIDE FRAME WITH ACCESSORIES FOR T-BAR LAY-IN CEILING GRID OR SURFACE MOUNTED BORDER FOR GYPSUM CEILING APPLICATION. SEE DRAWINGS FOR MOUNTING LOCATION. PROVIDE OPTIONAL OPPOSED BLADE DAMPER.
3. PROVIDE SUPPLY REGISTER WITH DOUBLE DEFLECTION AT 3/4" BLADE SPACING WITH FRONT BLADES PARALLEL TO LONG DIMENSION, OPTIONAL DAMPER AND SURFACE MOUNT BORDER MOUNTING FRAME.
4. PROVIDE RETURN REGISTER WITH SINGLE DEFLECTION AT 3/4" BLADE SPACING WITH BLADES PARALLEL TO LONG DIMENSION, OPTIONAL DAMPER AND SURFACE MOUNT BORDER MOUNTING FRAME.
5. PROVIDE WITH DOUBLE DEFLECTION AT 3/4" BLADE SPACING WITH FRONT BLADES PARALLEL TO SHORT DIMENSION AND OPTIONAL ASD (AIR SCOOP DAMPER/EXTRACTOR).
6. PROVIDE STANDARD FINISH - #26 WHITE.
7. PROVIDE REMOTE CABLE OPERATED VOLUME DAMPERS LOCATED IN INACCESSIBLE CONSTRUCTION.
8. PROVIDE BORDER 22 WITH TAPE AND SPACKLE FOR ALL LD TYPE DIFFUSER.

COMMERCIAL KITCHEN HOOD SCHEDULE

H / X

UNIT NO	LOCATION	MANUFACTURER MODEL	MAX COOKING TEMP	EXHAUST PLENUM: TOTAL EXH CFM	RISER(S): WIDTH	LENGTH	HEIGHT	DIA	CFM	VEL.	S.P.	HOOD CONSTRUCTION	HOOD HANGING WEIGHT	HOOD CONFIG.: END TO END	ROW	REMARKS
H-1	CULINARY ARTS CLASSROOM ROOM 110	CAPTIVE-AIRE 5424 ND-2-PSP-F	600 DEG F	3150	10"	15"	4"	-	1575	1512	-0.621"	430 SS 100%	915 LBS	LEFT	ALONE	SEE NOTES 1, 4
H-2	CULINARY ARTS CLASSROOM ROOM 110	CAPTIVE-AIRE 5424 ND-2-PSP-F	600 DEG F	3150	10"	15"	4"	-	1575	1512	-0.621"	430 SS 100%	873 LBS	RIGHT	ALONE	SEE NOTES 2, 4
H-3	DISH WASH ROOM 110A	CAPTIVE-AIRE 4824 VHB-G	700 DEG F	600	-	-	4"	10"	600	1100	-0.090"	430 SS 100%	168 LBS	ALONE	ALONE	SEE NOTES 3

NOTES:
1. H-1 HOOD - PROVIDE THE FOLLOWING HOOD OPTIONS: (FIELD VERIFY DIMENSIONS)
   - 1.1. FIELD WRAPPER 12" HIGH FRONT & LEFT.
   - 1.2. BACKSPLASH 80" HIGH X 360" LONG 430 SS VERTICAL.
   - 1.3. LEFT VERTICAL END PANEL 27" TOP WIDTH, 21" BOTTOM WIDTH, 80" HIGH INSULATED 430 SS.
   - 1.4. PERFORATED MAKEUP AIR SUPPLY PLENUM - FRONT (180"x16"x6"). (4) DUCT COLLARS W/VOLUME DAMPER, 10"x24" EACH. 23% OPEN STAINLESS STEEL PERFORATED PANEL.
   - 1.5. UTILITY CABINET - 12"x54"x24".
   - 1.6. QTY (10) CATRATE SOLO FILTER 20"Hx16"L.
   - 1.7. ELECTRIC UTILITY CABINET MODEL #DCV-2111.
   - 1.8. SWITCHES (1) LIGHT & (1) FAN.
   - 1.9. QTY (4) 12"x12" RECESSED LED LIGHT FIXTURES, 3K WARM OUTPUT.
2. H-2 HOOD - PROVIDE THE FOLLOWING HOOD OPTIONS: (FIELD VERIFY DIMENSIONS)
   - 2.1. FIELD WRAPPER 12" HIGH FRONT & RIGHT.
   - 2.2. BACKSPLASH 80" HIGH X 360" LONG 430 SS VERTICAL.
   - 2.3. RIGHT VERTICAL END PANEL 27" TOP WIDTH, 21" BOTTOM WIDTH, 80" HIGH INSULATED 430 SS.
   - 2.4. PERFORATED MAKEUP AIR SUPPLY PLENUM - FRONT (180"x16"x6"). (4) DUCT COLLARS W/VOLUME DAMPER, 10"x24" EACH. 23% OPEN STAINLESS STEEL PERFORATED PANEL
   - 2.5. UTILITY CABINET - 12"x54"x24".
   - 2.6. QTY (10) CATRATE SOLO FILTER 20"Hx16"L.
   - 2.7. SWITCHES (1) LIGHT & (1) FAN.
   - 2.8. QTY (4) 12"x12" RECESSED LED LIGHT FIXTURES, 3K WARM OUTPUT.
3. H-3 HOOD - PROVIDE THE FOLLOWING HOOD OPTIONS: (FIELD VERIFY DIMENSIONS)
   - 3.1. FIELD WRAPPER 12" HIGH FRONT & RIGHT.
4. PROVIDE FIRE SUPPRESSION SYSTEM: ANSUL R102
   - 4.1. PRE-ENGINEERED TYPE WITH A FIXED NOZZLE AGENT DISTRIBUTION NETWORK. SYSTEM SHALL BE LISTED WITH UNDERWRITERS LABORITORIES, INC. (UL)
   - 4.2. THE SYSTEM SHALL BE CAPABLE OF AUTOMATIC DETECTION AND ACTUATION WITH LOCAL OR REMOTE MANUAL ACTUATION. ACCESSORIES SHALL BE AVAILABLE FOR MECHANICAL OR ELECTRICAL GAS LINE SHUT-OFF APPLICATIONS.
   - 4.3. THE EXTINGUISHING AGENT SHALL BE A POTASSIUM CARBONATE, POTASSIUM ACETATE-BASED FORMULATION DESIGNED FOR FLAME KNOCKDOWN AND SECUREMENT OF GREASE RELATED FIRES. IT SHALL BE AVAILABLE IN PLASTIC CONTAINERS WITH INSTRUCTIONS FOR LIQUID AGENT HANDLING AND USAGE.
   - 4.4. THE REGULATED RELEASE MECHANISM SHALL BE COMPATIBLE WITH A FUSIBLE LINK DETECTION SYSTEM. THE FUSIBLE LINK SHALL BE SELECTED AND INSTALLED ACCORDING TO THE OPERATING TEMPERATURE IN THE VENTILATING SYSTEM. THE FUSIBLE LINK SHALL BE SUPPORTED BY A DETECTOR BRACKET/ LINKAGE ASSEMBLY.
   - 4.5. REFER TO SPECIFICATIONS FOR DETAILS.
   - 4.6. UTILITY CABINET 36"x36"
   - 4.7. PROVIDE ANSUL SYSTEM LAYOUT SUBMITTAL.

CONDENSATE PUMP SCHEDULE

CP / X

UNIT NO	LOCATION	SERVICE	MANUFACTURER MODEL	PUMP DATA: GPM (EACH)	DISCH. PRESS. (PSIG)	RPM	NO. OF PUMPS	OPER. TEMP. (°F)	NPSH (FT.)	MOTOR DATA: HP (EACH)	VOLTS/Ø	MCA	MOCP	RECEIVER CAPACITY (GAL.)	REMARKS
CP-1	113 - STORAGE ROOM	AHU-1, MAU-1	BELL & GOSSETT 61.5CC	6	15	3500	1	200	-	1/3	120/1	5.4	15	48	SEE NOTES

NOTES:
1. NEMA 4 FLOAT SWITCHES: DOUBLE POLE HEAVY DUTY, EXTERNALLY ADJUSTABLE.
2. INLET BASKET STRAINER.
3. HIGH LEVEL ALARM.
4. WATER LEVEL GUAGE.
5. DISCHARGE PRESSURE GUAGE.
6. FACTORY MOUNTED CONTROL PANEL.
7. ELECTRICAL DISCONNECT SWITCH.

FPA FRENCH & PARRELLO ASSOCIATES
Corporate Office 1800 Route 34, Suite 101 Wall, NJ 07719 732.312.9800
Regional Offices Hackettstown, NJ New York, NY
KEVIN DWYER, PE
PROFESSIONAL ENGINEER, NJ LIC. No. 24GE03525400

JOHN J. VEISZ, AIA, CSBA
NJ - 21AI00866900 | PA - RA010819B
WILLIAM D. HOPKINS III, AIA, LEED AP
NJ - 21AI01706000 | PA - RA012520X
GEORGE R. DUTHIE JR., AIA, PP
NJ - 21AI01299200
Architect 12/20/19 Date
FVHD architects planners EST 1918
Fraytak Veisz Hopkins Duthie PC
Corporate: 1515 Lower Ferry Road - Trenton - New Jersey 08628
Pennsylvania: 140 Whitaker Ave - Mont Clare - Pennsylvania 19453
FVHDPC.COM

Project Name: Culinary Arts Classroom Renovation at Wildwood Middle/ High School

Project Owner Name: Wildwood School District

Project Location: 4300 Pacific Avenue Wildwood, NJ 08260

Project Number: 5059

Project Date: 12-20-2019

Checked By: KLD

Drawn By: DB

Scale: AS SHOWN

Drawing Name: MECHANICAL SYMBOLS, NOTES, ABBREVIATIONS, AND SCHEDULES

Revisions No.	Date	Description

Drawing Number: M1.0

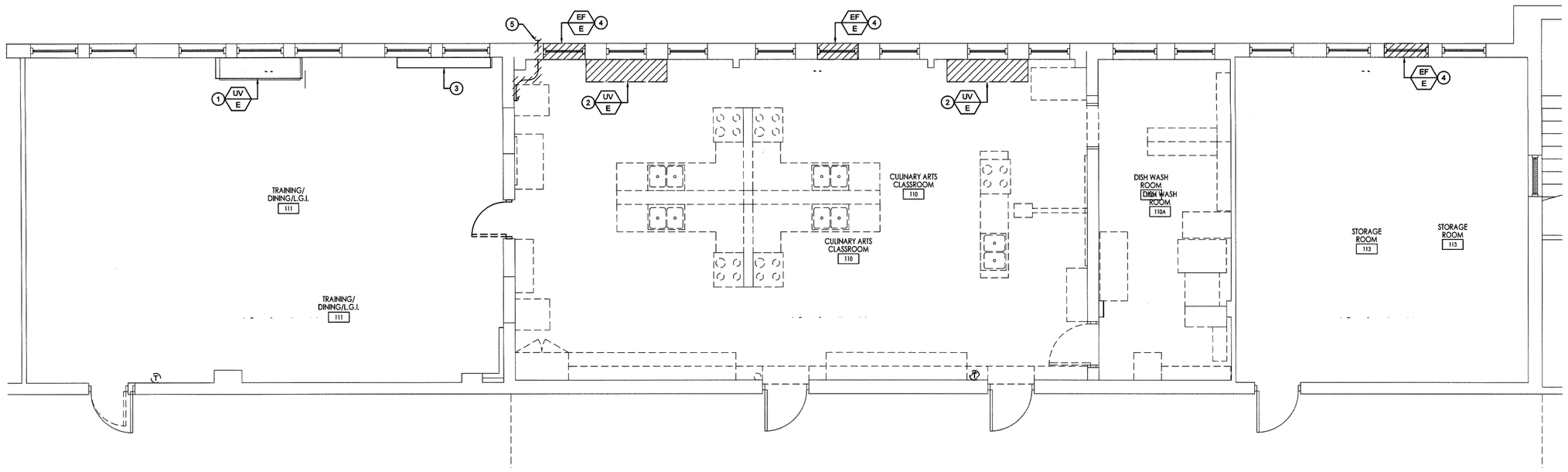

DEMOLITION PLAN

SCALE: 1/4" = 1'-0"

DEMOLITION KEY NOTES

1. EXISTING UNIT VENTILATOR AND ASSOCIATED THERMOSTAT TO REMAIN.
2. REMOVE AND DISCARD EXISTING UNIT VENTILATOR, THERMOSTAT, SUPPORTS AND ALL ASSOCIATED ACCESSORIES INCLUDING DUCTWORK AND EXISTING OA LOUVER. REMOVE PIPING BACK TO RESPECTIVE MAINS AND CAP. PATCH ALL SURFACES DISTURBED OR LEFT UNFINISHED BY THIS WORK TO MATCH ADJACENT SURFACES.
3. EXISTING STEAM RADIATOR TO REMAIN.
4. REMOVE AND DISCARD EXISTING EXHAUST FAN. SUPPORTS AND ALL ASSOCIATED ACCESSORIES. PATCH ALL SURFACES DISTURBED OR LEFT UNFINISHED BY THIS WORK TO MATCH ADJACENT SURFACES.
5. REMOVE EXISTING 4ø DRYER DUCTWORK AND WALL CAP. PATCH ALL SURFACES DISTURBED OR LEFT UNFINISHED BY THIS WORK TO MATCH ADJACENT SURFACES.

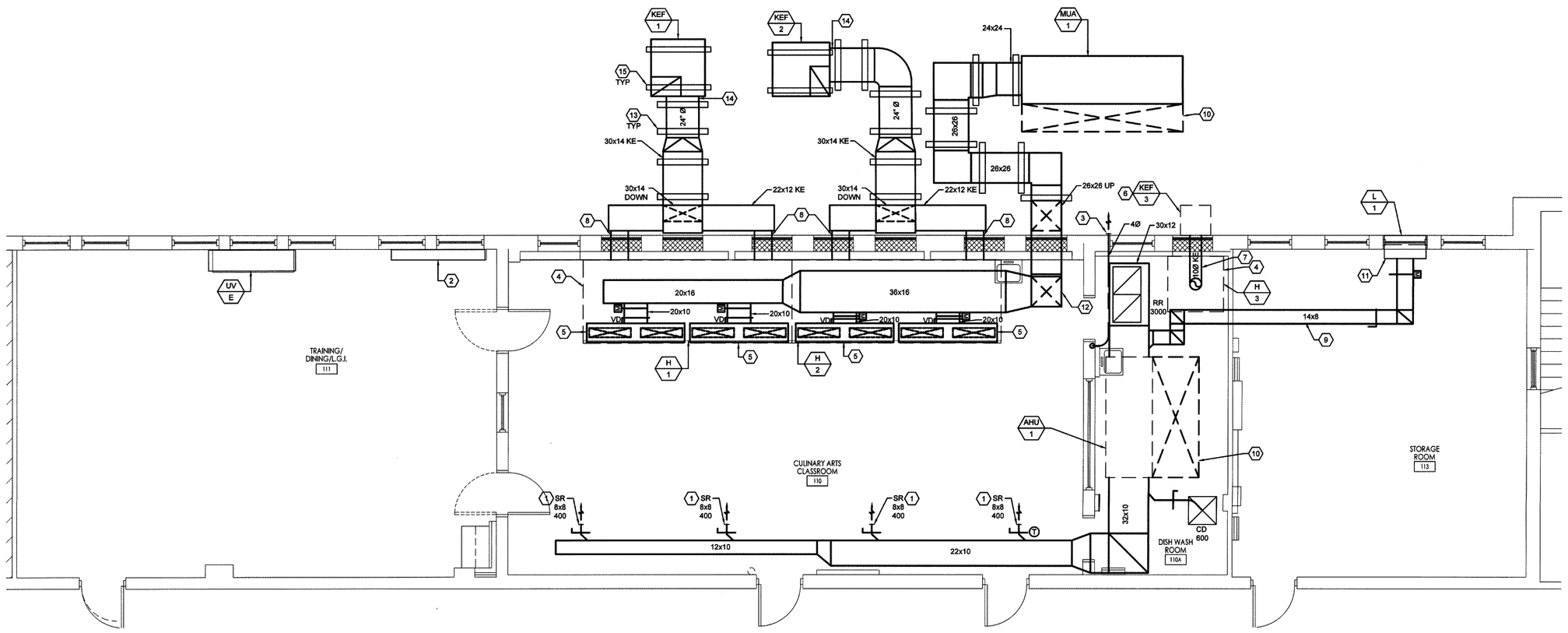

NEW WORK PLAN - DUCTWORK

SCALE: 1/4" = 1'-0"

KEY NOTES

1. CONTRACTOR TO COORDINATE AIR DEVICE WITH ARCHITECTURAL SOFFIT.
2. EXISTING STEAM RADIATOR TO REMAIN.
3. CLOTHES DRYER SHALL BE EXHAUSTED IN ACCORDANCE WITH MANUFACTURER'S RECOMMENDED PROCEDURES AND LOCAL CODES. CONTRACTOR TO PROVIDE CLEANOUT. DUCT SHALL HAVE SMOOTH INTERIOR FINISH AND SHALL BE CONSTRUCTED OF 0.016" THICK METAL MINIMUM AND TERMINATE AT EXTERIOR WALL WITH DRYER WALL VENT. NO SHEET METAL SCREWS OR OTHER FASTENERS THAT WILL OBSTRUCT THE EXHAUST FLOW SHALL BE USED. PROVIDE DRYER BOX. COORDINATE SIZE AND LOCATION WITH ARCHITECT.
4. REFER TO SCHEDULES & SPECIFICATIONS FOR THE DISH WASH HOOD.
5. PROVIDE 12" PLENUM BOX TO COVER MAKEUP AIR DISCHARGE FOR THE HOOD AS SHOWN ON PLANS AND CONNECT NEW 20X10 SUPPLY DUCTWORK.
6. CONTRACTOR TO MOUNT EXHAUST FAN TO EXTERIOR WALL PER MANUFACTURER'S RECOMMENDATIONS. TRANSITION 10" DIAMETER DUCTWORK TO EXHAUST FAN AS REQUIRED. REFER TO DETAIL SHEET FOR ADDITIONAL REQUIREMENTS.
7. ROUTE EXHAUST DUCTWORK THROUGH WINDOW OPENING. REFER TO ARCHITECTURAL PLANS FOR ADDITIONAL DETAILS ON SEALING OPENINGS. TRANSITION TO THE EXHAUST FAN AS RECOMMENDED.
8. PROVIDE 3M 2-HR FIRE WRAP FOR KITCHEN EXHAUST DUCTWORK ON EXTERIOR KITCHEN EXHAUST DUCTWORK BETWEEN WALL PENETRATION AND EXHAUST FAN CONNECTION.
9. CONTRACTOR TO ROUTE NEW 14x8 OA DUCTWORK TO AVOID ELECTRICAL EQUIPMENT AND/OR CONDUIT ASSOCIATED WITH ELECTRICAL PANELS
10. RECOMMENDED MANUFACTURERS ACCESS.
11. CONTRACTOR TO PROVIDE 12" PLENUM BOX.
12. ROUTE SUPPLY DUCTWORK THOUGH WINDOW OPENING. REFER TO ARCHITECTURAL PLANS FOR ADDITIONAL DETAILS ON SEALING OPENINGS. BRING NEW 28"x26" DUCT INTO ROOM 110 AND RISE UP TO BOTTOM OF STRUCTURE. TRANSITION TO 36"X16" SUPPLY DUCTWORK. CONTRACTOR TO COORDINATE SUPPLY DUCT WITH ARCHITECTURAL SOFFIT.
13. DUCT MOUNTING RAILS WITH HOT DIPPED GALVANIZED RUST RESISTANT UNISTRUT CRADLE FRAMING AROUND ENTIRE PERIMETER. PROVIDE POSITIVE SLOPE AROUND EQUIPMENT RAIL. SEE DETAILS FOR ADDITIONAL INFORMATION.
14. TRANSITION EXHAUST DUCTWORK TO UNIT AS REQUIRED. REFER TO DETAILS FOR ADDITIONAL REQUIREMENTS.
15. EQUIPMENT MOUNTING RAILS WITH RUST RESISTANT UNISTRUT CRADLE FRAMING AROUND ENTIRE PERIMETER. SEE DETAILS FOR ADDITIONAL INFORMATION.

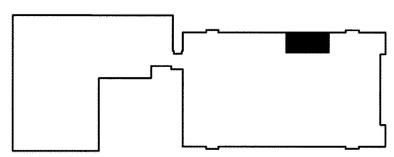

KEY PLAN

SCALE: NONE

FRENCH & PARRELLO ASSOCIATES

Corporate Office
1800 Route 34, Suite 101
Wall, NJ 07719
732.312.9800
Regional Offices
Hackettstown, NJ
New York, NY

[redacted], PE
PROFESSIONAL ENGINEER, NJ LIC. No. [redacted]

JOHN J. VEISZ, AIA, CSBA
NJ - 21AI00560900 | PA - 400050178
WILLIAM D. HOPKINS III, AIA, LEED AP
NJ - 21AI01700300 | PA - 400122301
GEORGE R. DUTHIE JR., AIA, PP
NJ - 21AI01299200

Architect Date 12/20/19

FVHD architects planners
Fraytak Veisz Hopkins Duthie P C
FVHDPC.COM
Corporate: 1515 Lower Ferry Road - Trenton - New Jersey 08628
Pennsylvania: 140 Whitaker Ave - Mont Clare - Pennsylvania 19453

Project Name
Culinary Arts Classroom Renovation at Wildwood Middle/ High School

Project Owner Name
Wildwood School District

Project Location
4300 Pacific Avenue
Wildwood, NJ 08260

Project Number
5059

Project Date
12-20-2019

Checked By
KLD

Drawn By
DB

Scale
AS SHOWN

Drawing Name
MECHANICAL DEMOLITION PLAN AND NEW WORK PLANS - DUCTWORK

Revisions

No.	Date	Description

Drawing Number
M2.0

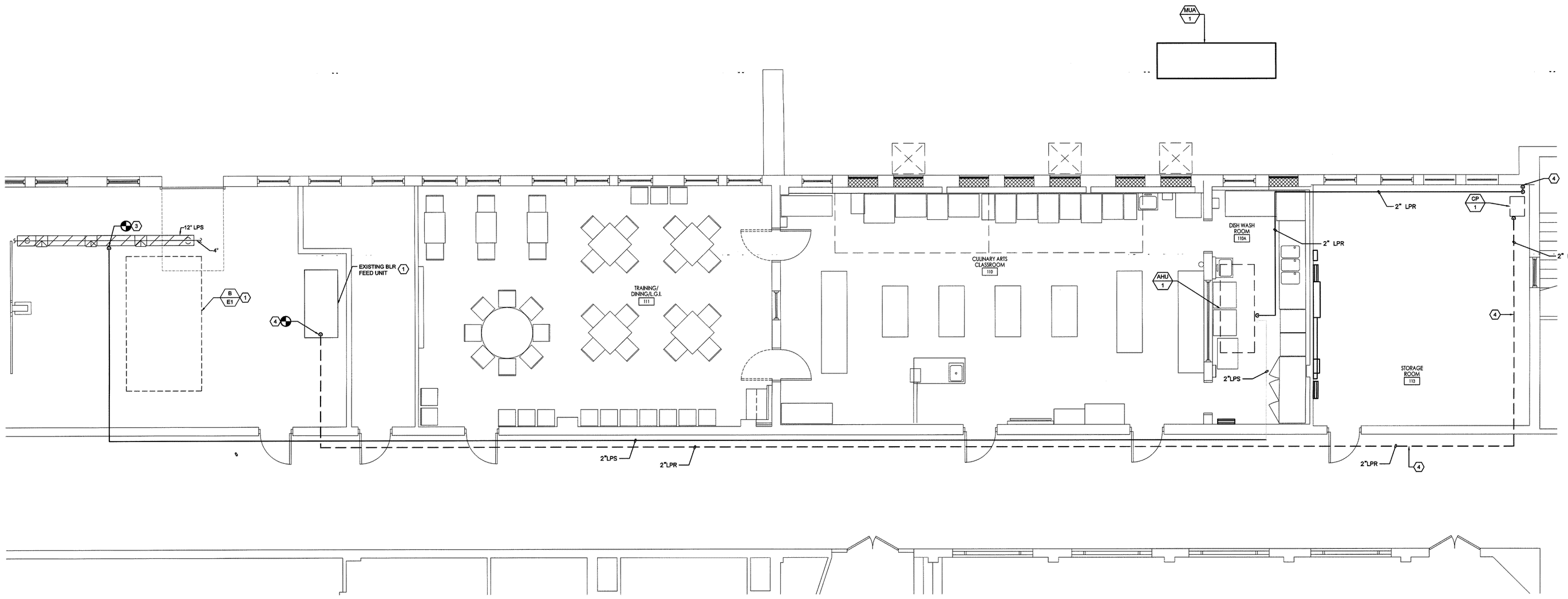

NEW WORK PLAN - PIPING

SCALE: 1/4" = 1'-0"

KEY NOTES

1. EXISTING TO REMAIN.
2. CONNECT 2" LPR DROP TO INLET OF CONDENSATE RECEIVER.
3. EXTEND 2" LPS LINE FROM EXISTING 12" LPS HEADER IN THE BOILER ROOM. CONNECT TO AHU PER MANUFACTURER'S RECOMMENDED PROCEDURES. CONTRACTOR TO COORDINATE EXACT TIE-IN LOCATION.
4. CONNECT NEW 2" LPR LINE TO EXISTING BOILER FEED UNIT IN THE BOILER ROOM. CONTRACTOR TO COORDINATE EXACT TIE-IN LOCATION.

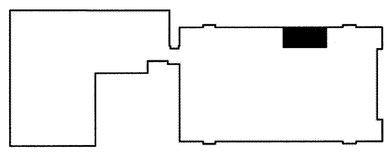

KEY PLAN

SCALE: NONE

FPA FRENCH & PARRELLO ASSOCIATES

Corporate Office
1800 Route 34, Suite 101
Wall, NJ 07719
732.312.9800
Regional Offices
Hackettstown, NJ
New York, NY

KEVIN DWYER, PE
PROFESSIONAL ENGINEER, NJ LIC. No. 24GE03525400

JOHN J. VEISZ, AIA, CSBA
NJ - 21AI00866900 | PA - RA010819B

WILLIAM D. HOPKINS III, AIA, LEED AP
NJ - 21AI01706000 | PA - RA012520X

GEORGE R. DUTHIE JR., AIA, PP
NJ - 21AI01299200

Architect 12/20/19 Date

FVHD architects planners
Fraytak Veisz Hopkins Duthie PC
Corporate: 1515 Lower Ferry Road - Trenton - New Jersey 08628
Pennsylvania: 140 Whitaker Ave - Mont Clare - Pennsylvania 19453
FVHDPC.COM

Project Name
Culinary Arts Classroom Renovation at Wildwood Middle/ High School

Project Owner Name
Wildwood School District

Project Location
4300 Pacific Avenue
Wildwood, NJ
08260

Project Number
5059

Project Date
12-20-2019

Checked By
KLD

Drawn By
DB

Scale
AS SHOWN

Drawing Name
MECHANICAL NEW WORK PLANS - PIPING

Revisions

No.	Date	Description

Drawing Number
M2.1

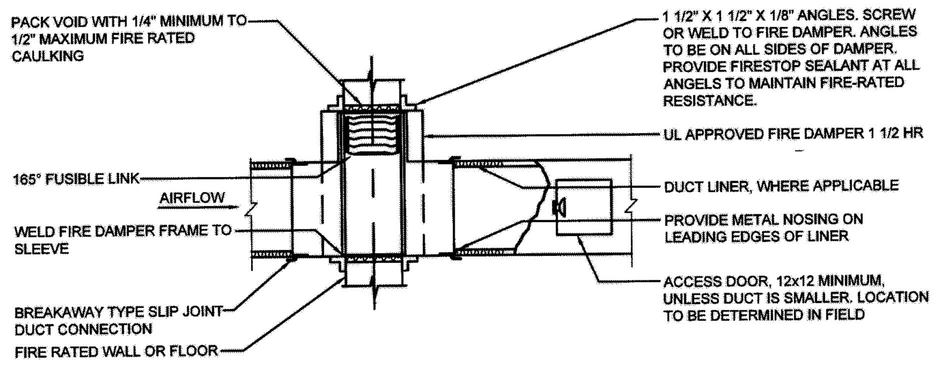

NOTES:
1. FIRE DAMPER SHALL BE DYNAMIC RATED WITH NEGATOR SPRING FOR CLOSURE FORCE.
2. SEE ARCHITECTURAL DRAWINGS FOR WALL RATINGS.
3. FIRE DAMPER TO BE TYPE B.

FIRE DAMPER DETAIL
NOT TO SCALE

FIRE DAMPER RATING SCHEDULE

BASED ON 2015 INTERNATIONAL BUILDING, CODE, TABLE 717.3.2.1, AND 2015 INTERNATIONAL MECHANICAL CODE, TABLE 607.3.2.1.	
TYPE OF PENETRATION	MINIMUM DAMPER RATING (HOUR)
LESS THAN 3-HOUR FIRE-RESISTANCE-RATED ASSEMBLIES	1 1/2
3-HOUR OR GREATER FIRE-RESISTANCE-RATED ASSEMBLIES	3

NOTES:
1. FIRE DAMPERS SHALL BE REQUIRED IN PENETRATIONS AS LISTED ABOVE, WHICH INCLUDE, BUT ARE NOT LIMITED TO, FIRE-RESISTANCE RATED SHAFT WALLS, FLOOR ASSEMBLIES, CEILING ASSEMBLIES, AND SMOKE BARRIERS.
2. FIRE DAMPERS SHALL HAVE THE MINIMUM FIRE PROTECTION RATING SPECIFIED IN TABLE 607.3.2.1 OF THE 2015 INTERNATIONAL MECHANICAL CODE.
3. TWO HOUR FIRE-RESISTANCE RATED FIRE WALLS INCLUDE, BUT ARE NOT LIMITED TO, BOILER ROOM, ELEVATOR MACHINE ROOM FIRE PUMP ROOM, SHAFTS, FLOOR PENETRATIONS, AND WHERE NEW ADDITIONS CONNECT TO EXISTING BUILDING.
4. PROVIDE ACCESS DOORS AT ALL FIRE DAMPERS. ACCESS DOOR LOCATIONS SHALL BE PERMANENTLY IDENTIFIED ON THE EXTERIOR BY A LABEL HAVING MINIMUM 1/2 INCH HEIGHT LETTERING READING "FIRE DAMPER" IN ACCORDANCE WITH IBC-2015 717.4 AND IMC-2015, 607.4.
5. IBC-2015, 717.5.2, "FIRE BARRIERS": EXCEPTION 3, & IMC-2015, 607.5.2 "FIRE BARRIERS", EXCEPTION 3: FIRE DAMPERS ARE NOT REQUIRED AT HVAC DUCT PENETRATIONS OF FIRE BARRIERS WITH A REQUIRED 1-HOUR OR LESS FIRE-RESISTANCE RATING WHERE BUILDING IS EQUIPPED THROUGHOUT WITH AN AUTOMATIC SPRINKLER SYSTEM.
6. IBC-2015, 717.5.4, "FIRE PARTITIONS", EXCEPTION 1, & IMC-2015, 607.5.3 "FIRE PARTITIONS", EXCEPTION 1: FIRE DAMPERS ARE NOT REQUIRED AT HVAC DUCT PENETRATIONS OF FIRE PARTITIONS WHERE PARTITIONS ARE TENANT SEPARATION AND CORRIDOR WALLS IN BUILDINGS EQUIPPED THROUGHOUT WITH AN AUTOMATIC SPRINKLER SYSTEM.
7. IBC-2015, 717.5.4, "FIRE PARTITIONS", EXCEPTION 3, & IMC-2015, 607.5.3 "FIRE PARTITIONS", EXCEPTION 3: FIRE DAMPERS ARE NOT REQUIRED AT HVAC DUCT PENETRATIONS OF FIRE PARTITIONS WHERE DUCT SYSTEM IS CONSTRUCTED OF APPROVED MATERIALS PER IMC-2015, AND THE DUCT PENETRATING THE PARTITION MEETS ALL OF THE SIX FOLLOWING MINIMUM REQUIREMENTS:
   A. THE DUCT SHALL NOT EXCEED 100 SQUARE INCHES.
   B. THE DUCT SHALL BE CONSTRUCTED OF STEEL A MINIMUM OF 0.0217 INCH THICKNESS.
   C. THE DUCT SHALL NOT HAVE OPENINGS THAT COMMUNICATE THE CORRIDOR WITH ADJACENT SPACES OR ROOMS.
   D. THE DUCT SHALL BE INSTALLED ABOVE A CEILING.
   E. THE DUCT SHALL NOT TERMINATE AT A WALL REGISTER IN THE FIRE-RESISTANCE-RATED WALL.
   F. A MINIMUM 12 INCH LONG BY 0.060 INCH THICK STEEL SLEEVE SHALL BE CENTERED IN EACH DUCT OPENING. THE SLEEVE SHALL BE SECURED TO BOTH SIDES OF THE WALL AND ALL FOUR SIDES OF THE SLEEVE WITH MINIMUM 1 1/2 INCH BY 1 1/2 INC BY 0.060 INCH STEEL RETAINING ANGLES. THE RETAINING ANGLES SHALL BE SECURED TO THE SLEEVE AND WALL WITH NO. 10 SCREWS. THE ANNULAR SPACE BETWEEN THE STEEL SLEEVE AND THE WALL OPENING SHALL BE FILLED WITH ROCK (MINERAL) WOOL BATTING ON ALL SIDES.

NOTES:

DRYER VENTING: MECHANICAL CONTRACTOR SHALL BE RESPONSIBLE FOR RUNNING ALL DUCTWORK FOR THE DRYER EXHAUST SYSTEM. ALL CONCEALED DRYER DUCTING MUST BE RIGID METAL (GALVANIZED OR ALUMINUM) MINIMUM OF 4" IN DIAMETER, SMOOTH 30 GA. CLEAN, UNOBSTRUCTED, FRICTIONLESS DUCTS (NO FLEXIBLE DUCT ALLOWED IN CONCEALED AREAS). SEAL ALL JOINTS WITH FOIL BACKED PRESSURE SENSITIVE DUCT TAPE MEETING THE REQUIREMENTS OF UL 181. DUCT JOINTS SHALL BE INSTALLED SO THAT THE MALE END OF THE DUCT POINTS IN THE DIRECTION OF THE AIRFLOW. DO NOT USE RIVETS OR SCREWS IN THE JOINTS OR ANYWHERE ELSE IN THE DUCT AS THESE WILL ENCOURAGE LINT COLLECTION.

DRYERBOX® RECEPTACLE (WWW.DRYERBOX.COM) SHALL BE METAL AND BE INSTALLED AS LOW AS POSSIBLE AS TO PERMIT THE PROPER AND SAFE COLLECTION OF THE DRYER TRANSITION HOSE. DRYERBOX SHOULD BE RESTING ON THE BOTTOM PLATE AND BE LOCATED AT OR NEAR THE CENTERLINE OF THE PROPOSED DRYER APPLIANCE. RIGID DUCT SHOULD PENETRATE DRYERBOX PORT 2 INCHES TO PROVIDE FOR FUTURE CONNECTION AND STORAGE OF TRANSITION HOSE. BASEBOARD SHALL BE "BUTTED" UP TO THE FIXED EXTENSION RIM AND SLIGHTLY BACK-CUT. DRYERBOX SHOULD BE CAULKED AND THEN PAINTED WITH THE TRIM PAINT. FOR USAGE IN A ONE-HOUR WALL ASSEMBLY, UL REQUIRES THAT BATT INSULATION BE STUFFED AROUND THE DRYERBOX AND IN THE ENTIRE WALL CAVITY CELL.

LENGTH OF CONCEALED RIGID METAL DUCTING SHALL NOT EXCEED 25 FEET. DEDUCT 5 FEET FROM THE ALLOWABLE LENGTH FOR EVERY 3.5" RADIUS 90 DEGREE ELBOW AND TWO AND A HALF FEET FOR EVERY 45 DEGREE FITTING. DRYER VENTING SHALL BE INDEPENDENT OF ANY OTHER SYSTEMS (CHIMNEYS OR EXHAUST VENTS). TERMINATION OF DRYER VENTING MUST BE TO THE EXTERIOR WITH A PROPER HOOD OR ROOF JACK EQUIPPED WITH A BACK-DRAFT DAMPER. SMALL ORIFICE METAL SCREENING SHOULD NOT BE PART OF THE HOOD OR ROOF JACK AS THIS WILL ACCELERATE LINT ACCUMULATION AND BLOCKAGE. THE HOOD OPENING SHOULD POINT DOWN AND EXHIBIT 12 INCHES OF CLEARANCE BETWEEN THE BOTTOM OF THE HOOD AND THE GROUND OR OTHER OBSTRUCTION. VERIFY MANUFACTURER'S RECOMMENDATIONS FOR ANY OTHER FACTORS.

MANUFACTURER: IN-O-VATE TECHNOLOGIES, INC.
810 SATURN STREET, SUITE 22
JUPITER, FL 33477 USA
(888) 443.7937
WWW.DRYERBOX.COM

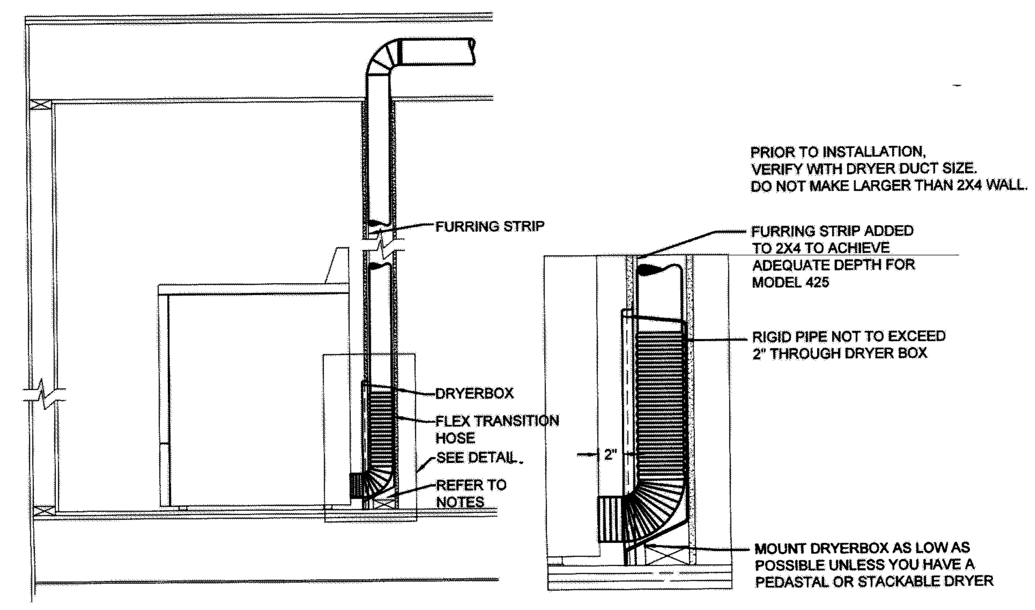

DRYER BOX VENT DETAIL
NOT TO SCALE

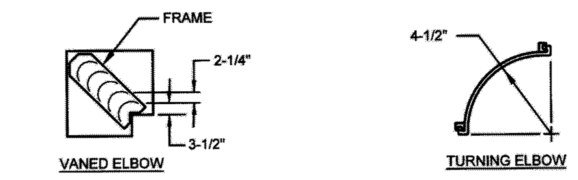

NOTES
1. LOCKING LUGS INTEGRAL WITH VANE.
2. MAXIMUM UNSUPPORTED VANE LENGTH 36".
3. FRAMES BOLTED OR RIVETED TO ELBOW.
4. VANES AND FRAME SAME GAUGE AS ELBOW.

SINGLE THICKNESS
DUCTWORK UNDER 1200 FPM

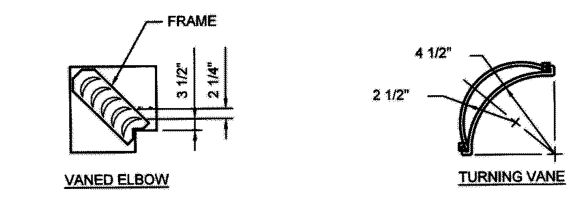

DOUBLE THICKNESS
DUCTWORK OVER 1200 FPM

NOTES:
1. LOCKING LUGS INTEGRAL WITH VANE.
2. MAXIMUM UNSUPPORTED VANE LENGTH 48".
3. FRAMES BOLTED OR RIVETED TO ELBOW.
4. VANES AND FRAME SAME GAUGE AS ELBOW.

TURNING VANES FOR SQUARE ELBOWS
NOT TO SCALE

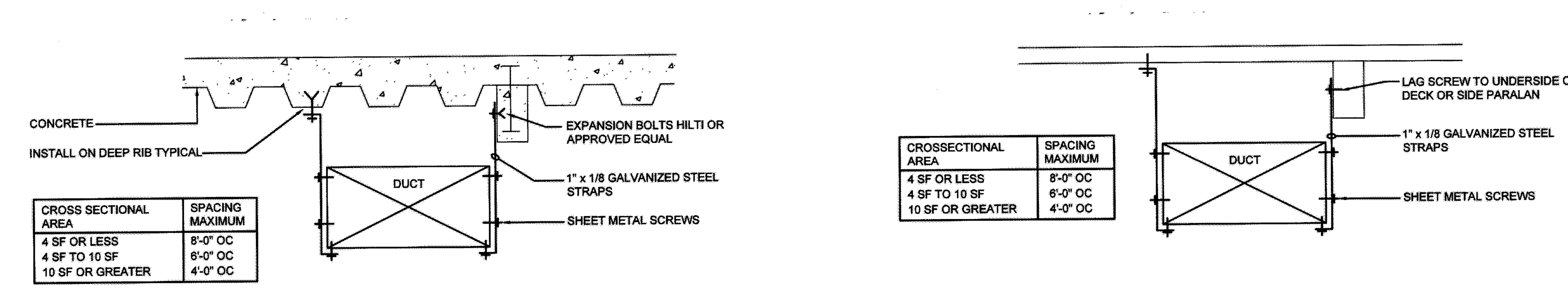

CROSS SECTIONAL AREA	SPACING MAXIMUM
4 SF OR LESS	8'-0" OC
4 SF TO 10 SF	6'-0" OC
10 SF OR GREATER	4'-0" OC

CROSSECTIONAL AREA	SPACING MAXIMUM
4 SF OR LESS	8'-0" OC
4 SF TO 10 SF	6'-0" OC
10 SF OR GREATER	4'-0" OC

DUCT HANGER DETAIL
NOT TO SCALE

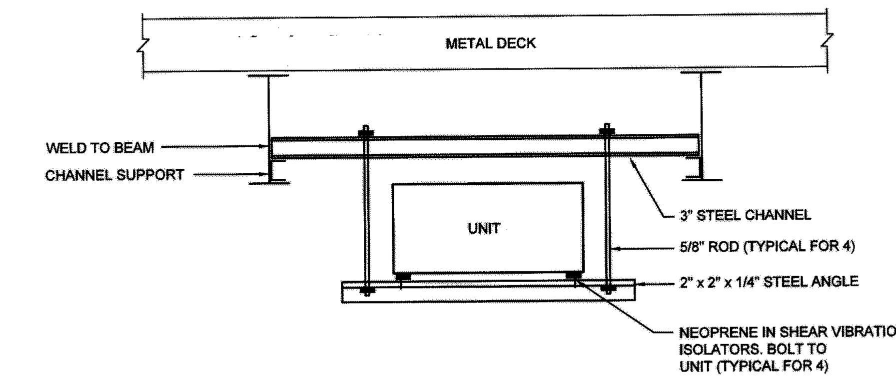

UNIT MOUNTING SUPPORT DETAIL
NOT TO SCALE

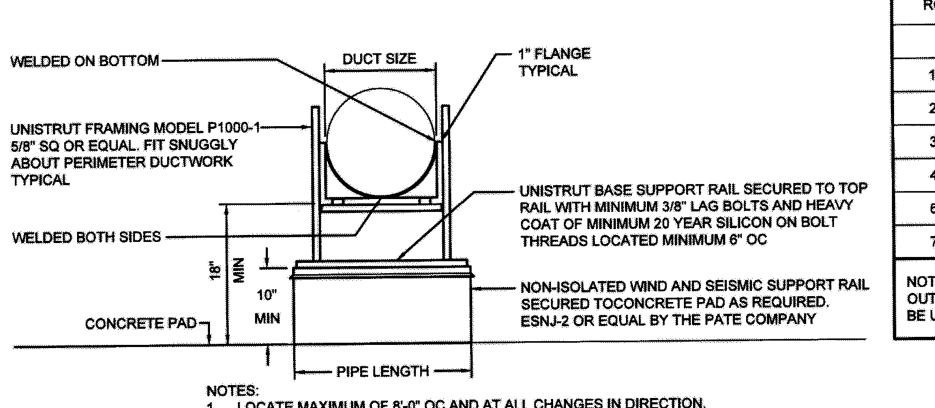

NOTES:
1. LOCATE MAXIMUM OF 8'-0" OC AND AT ALL CHANGES IN DIRECTION.
2. UNISTRUT FRAMING AND CONNECTION HARDWARE, BOLTS, NUTS AND WASHERS TO BE HOT-DIPPED GALVANIZED FINISH.

EXHAUST DUCT SUPPORT DETAIL
NOT TO SCALE

SIZE CHART

ROUND DUCT SIZE	EQUIPMENT RAIL LENGTH
UP TO 12" DIA	2'-0"
12 1/4" TO 24" DIA	3'-0"
24 1/4" TO 36" DIA	4'-0"
36 1/4" TO 48" DIA	5'-0"
48 1/4" TO 60" DIA	6'-0"
60 1/4" TO 72" DIA	7'-0"
72 1/4" TO 84" DIA	8'-0"
NOTE: WHEN DUCTWORK IS INSULATED, TOTAL OUTSIDE DIAMETER OF DUCT AND COVERING SHOULD BE USED TO DETERMINE SIZE OF SLIDE ASSEMBLY.	

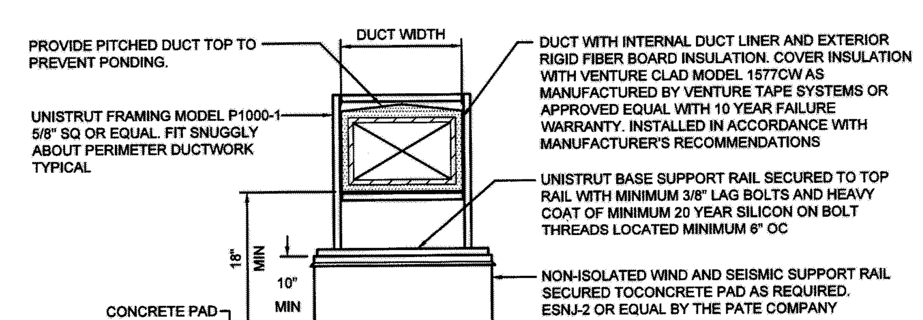

NOTES:
1. LOCATE MAXIMUM OF 8'-0" OC AND AT ALL CHANGES IN DIRECTION.
2. UNISTRUT FRAMING AND CONNECTION HARDWARE, BOLTS, NUTS AND WASHERS TO BE HOT-DIPPED GALVANIZED FINISH.

DUCT SUPPORT DETAIL
NOT TO SCALE

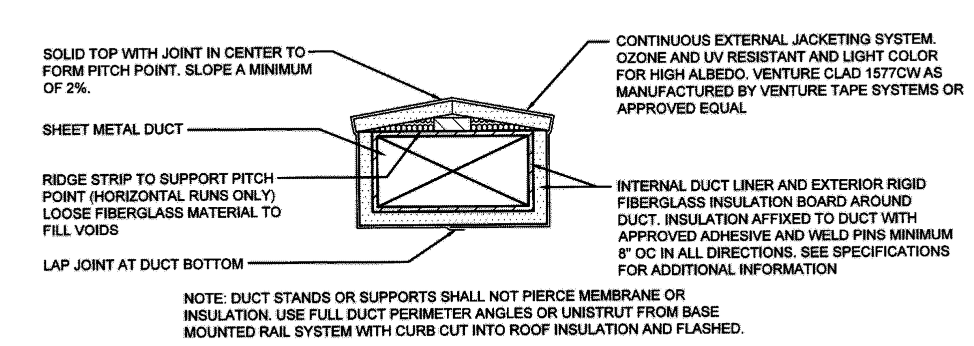

NOTE: DUCT STANDS OR SUPPORTS SHALL NOT PIERCE MEMBRANE OR INSULATION. USE FULL DUCT PERIMETER ANGLES OR UNISTRUT FROM BASE MOUNTED RAIL SYSTEM WITH CURB CUT INTO ROOF INSULATION AND FLASHED.

EXTERIOR DUCT INSULATION AND WEATHERPROOFING DETAILS
NOT TO SCALE

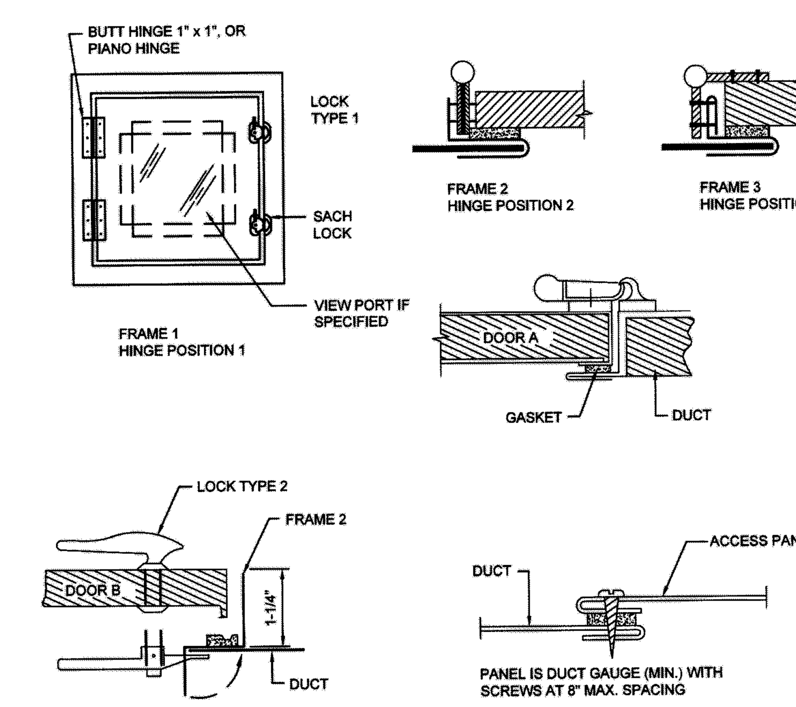

DUCT ACCESS DOORS
NOT TO SCALE

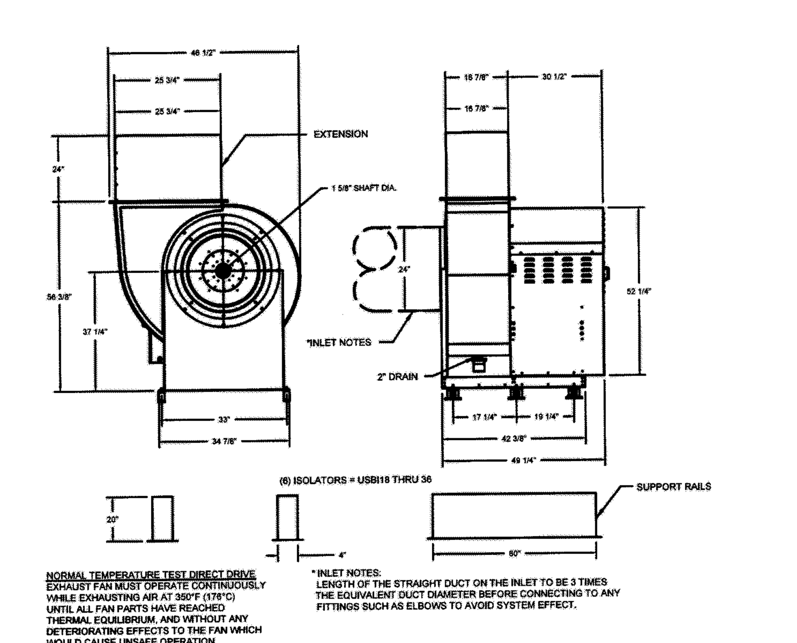

EXHAUST FAN DETAILS
NOT TO SCALE

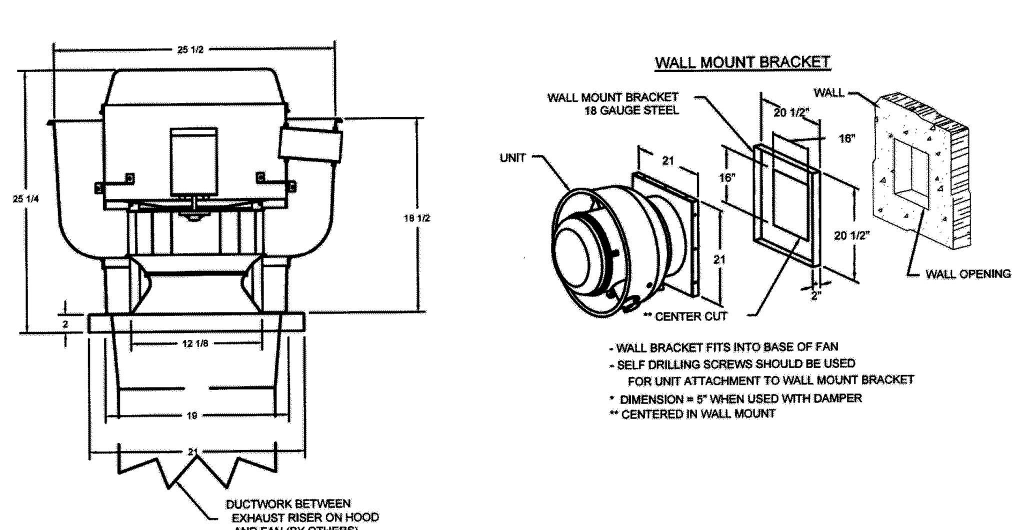

EXHAUST FAN DETAILS
NOT TO SCALE

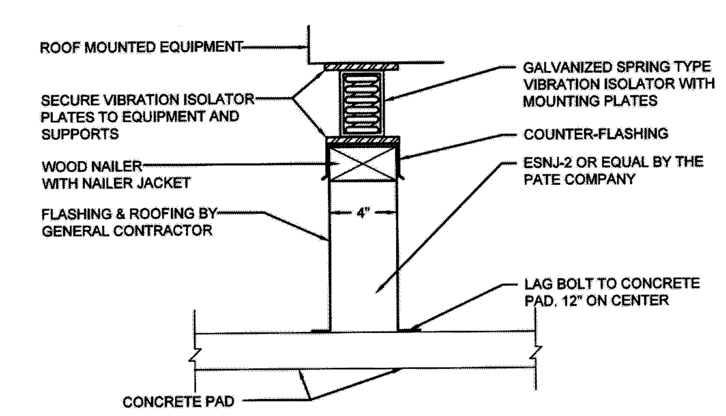

NOTE:
1. MINIMUM 14 GA. HOT DIPPED GALVANIZED WITH INTEGRAL BASE PLATE, CONTINUOUS WELD CORNER SEAMS, PRESSURE TREATED WOOD NAILER, COUNTERFLASHING WITH SCREWS.
2. INTERNAL 14 GA GALVANIZED STEEL GUSSET, EVERY 12 INCH ON CENTER.
3. 14 GA NAILER JACKETS WELDED TO BASE SECTION TO RESTRAIN NAILER UNDER EXTREME UPLIFT OR TWISTING FORCES.
4. MINIMUM 18" HIGH ABOVE THE FINISHED CONCRETE SURFACE. PITCH THE EQUIPMENT SUPPORT TO MAINTAIN LEVEL MOUNTING SURFACE.
5. REFER TO CONTRACT DOCUMENTS FOR SUBMITTED CALCULATION REQUIREMENTS.

TYPICAL EQUIPMENT SUPPORT DETAIL
NOT TO SCALE

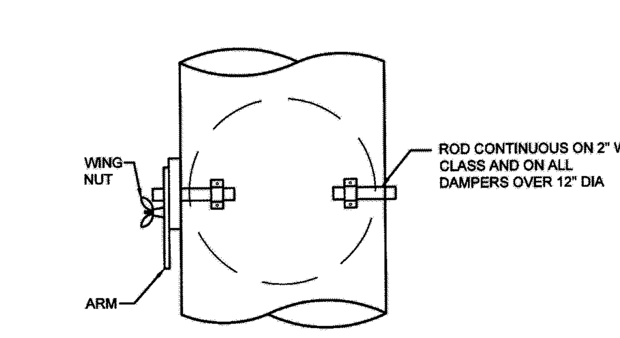

FIG. C
ROUND DAMPER

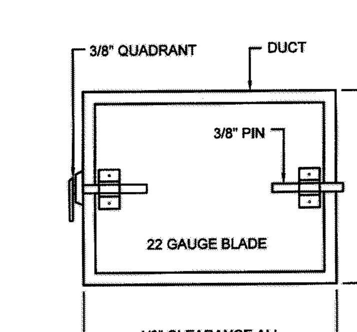

FIG. A
RECTANGULAR DAMPER

RECTANGULAR VOLUME DAMPERS EXCEEDING 1.5 SF SHALL BE OPPOSED BLADE DAMPER TYPE

VOLUME DAMPERS - SINGLE BLADE TYPE
NOT TO SCALE

45 DEGREE ENTRY Θ=45°
L=1/4W, 4" MINIMUM

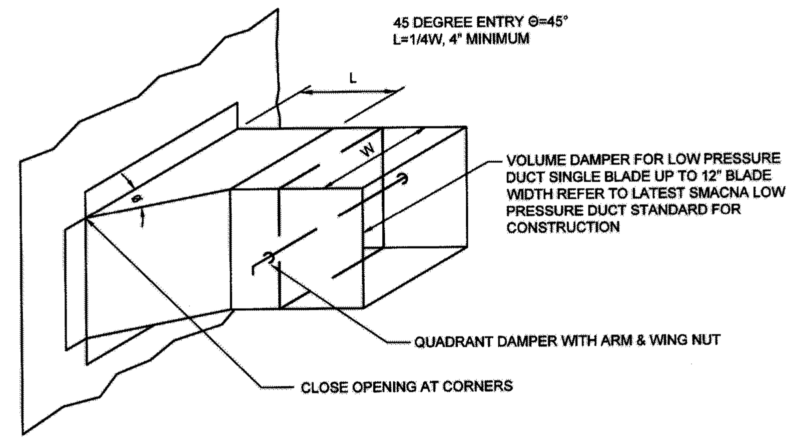

TYPICAL RECTANGULAR BRANCH CONNECTION DETAIL
NOT TO SCALE

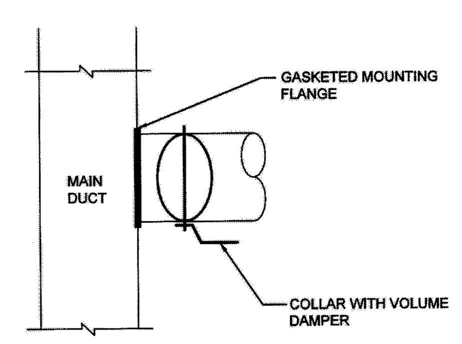

TYPICAL COLLAR DUCT CONNECTION DETAIL
NOT TO SCALE

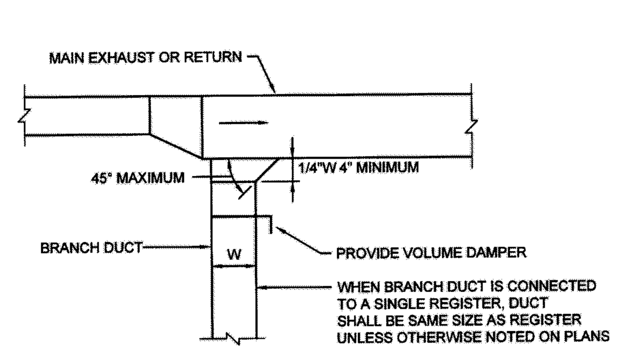

EXHAUST AND/OR RETURN BRANCH DUCT DETAIL
NOT TO SCALE

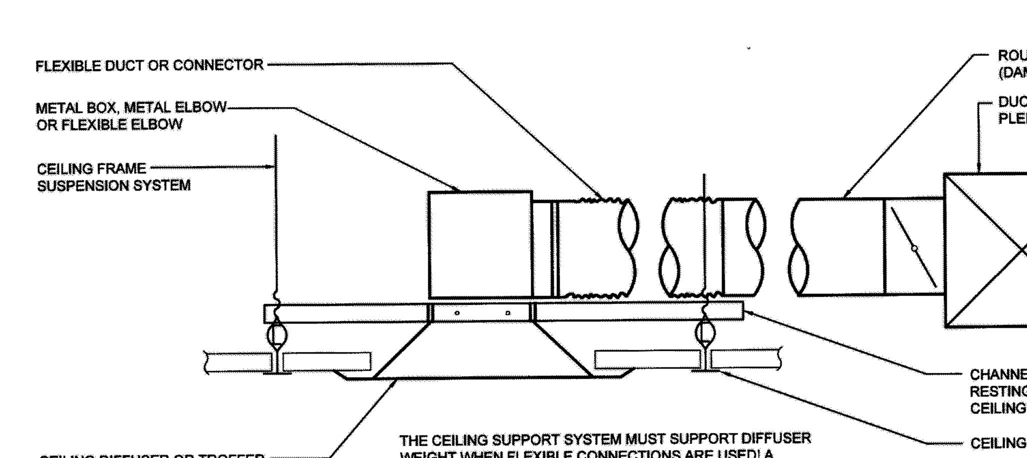

CEILING DIFFUSER BRANCH DUCT DETAIL
NOT TO SCALE

FRENCH & PARRELLO ASSOCIATES
Corporate Office
1800 Route 34, Suite 101
Wall, NJ 07719
732.312.9800
Regional Offices
Hackettstown, NJ
New York, NY

KEVIN DWYER, PE
PROFESSIONAL ENGINEER, NJ LIC. No. 24GE03525400

JOHN J. VEISZ, AIA, CSBA
NJ - 21AI00866900 | PA - RA010819B
WILLIAM D. HOPKINS III, AIA, LEED AP
NJ - 21AI01706000 | PA - RA012520X
GEORGE R. DUTHIE JR., AIA, PP
NJ - 21AI01299200

Architect 12/20/19 Date

FVHD architects planners
EST 1918
Fraytak Veisz Hopkins Duthie PC
Corporate: 1515 Lower Ferry Road - Trenton - New Jersey 08628
Pennsylvania: 140 Whitaker Ave - Mont Clare - Pennsylvania 19453
FVHDPC.COM

Project Name	Culinary Arts Classroom Renovation at Wildwood Middle/ High School
Project Owner Name	Wildwood School District
Project Location	4300 Pacific Avenue Wildwood, NJ 08260
Project Number	5059
Project Date	12-20-2019
Checked By	KLD
Drawn By	KLD
Scale	AS SHOWN
Drawing Name	MECHANICAL DETAILS

Revisions

No.	Date	Description

Drawing Number
M3.0

ELECTRICAL NOTES:

1. DRAWINGS ARE DIAGRAMMATIC AND DEFINE THE INTENT OF THE WORK. LOCATIONS OF EQUIPMENT, FIXTURES, DEVICES, PANELBOARDS, DUCTS, PIPING, DIFFUSERS, PARTITIONS, OPENINGS, ETC. ARE APPROXIMATE AND ARE SUBJECT TO MODIFICATIONS CAUSED BY STRUCTURAL CONDITIONS AND EQUIPMENT PROVIDED BY OTHER CONTRACTORS, SUBCONTRACTORS OR THE OWNER. COORDINATE ALL WORK WITH THE WORK OF OTHER TRADES. DETERMINE ROUGHING LOCATIONS FROM APPROVED SHOP DRAWINGS. MINOR MODIFICATIONS OF LOCATIONS REQUIRED TO EFFECT SUCH COORDINATION SHALL BE MADE AT NO COST TO THE OWNER.
2. THE DRAWINGS HAVE BEEN PRODUCED ENTIRELY ON FPA CADD SYSTEM. ANY OTHER LETTERING, LINES OR SYMBOLS, OTHER THAN PROFESSIONAL STAMPS AND SIGNATURES, HAVE BEEN MADE WITHOUT THE AUTHORIZATION OF FPA AND ARE INVALID.
3. REPRODUCTION OF ANY PORTION OF THE CONTRACT DRAWINGS FOR RESUBMITTAL AS SHOP DRAWINGS IS PROHIBITED. SHOP DRAWINGS PRODUCED IN SUCH A MANNER WILL BE REJECTED AND RETURNED.
4. SPECIFICATIONS MAY REQUIRE WORK, EQUIPMENT, SYSTEMS, METHODS, ETC. THAT IS NOT INDICATED ON THE DRAWINGS.
5. DRAWINGS AND SPECIFICATIONS ARE INTENDED TO BE COMPLEMENTARY TO EACH OTHER. WHERE DISCREPANCIES OR CONFLICTS OCCUR, THE CONTRACTOR SHALL INCLUDE THE MORE COSTLY METHOD IN HIS PROPOSAL UNLESS CLARIFIED BY BULLETIN OR ADDENDUM ACKNOWLEDGED PRIOR TO RECEIPT OF BIDS.
6. THE OWNER WILL OCCUPY THE SITE AND EXISTING BUILDING[S] DURING THE ENTIRE CONSTRUCTION PERIOD. COOPERATE WITH THE OWNER DURING CONSTRUCTION OPERATIONS TO AVOID ANY CONFLICTS. PERFORM THE WORK SO AS NOT TO INTERFERE WITH THE OWNER'S OPERATIONS. SCHEDULE ALL POWER OUTAGES FOR OVERTIME ON SUNDAYS AND HOLIDAYS AT NO ADDITIONAL COST TO THE OWNER.
7. EXISTING PROJECT CONDITIONS INDICATED ARE BASED ON FIELD OBSERVATION, EXISTING DESIGN / CONSTRUCTION DOCUMENTS AND EXISTING RECORD DOCUMENTS AND ARE INTENDED TO INDICATE THE SCOPE OF THE WORK AFFECTED BY THIS PROJECT.
8. THE TERM "OTHERS" SHALL BE UNDERSTOOD TO MEAN CONTRACTORS, SUBCONTRACTORS OR TRADESMEN ON THE PROJECT PERFORMING WORK ON THIS PROJECT UNDER SECTIONS OR DIVISIONS OTHER THAN DIVISION 16 - ELECTRICAL WORK.
9. VERIFY THAT FIELD MEASUREMENTS AND CIRCUITING ARRANGEMENTS ARE AS INDICATED.
10. PRIOR TO BIDDING VISIT THE PROJECT SITE TO DETERMINE THE CONDITIONS UNDER WHICH THE WORK IS TO BE DONE. SCHEDULE SITE VISIT WITH OWNER.
11. PROVIDE ALL LABOR, MATERIALS AND EQUIPMENT REQUIRED FOR THE INSTALLATION, RELOCATION AND CONNECTION OF THE ELECTRICAL WORK.
12. ALL MATERIAL SHALL BE UNDERWRITERS' LABORATORIES LISTED FOR ITS APPLICATION WHERE SUCH LISTING IS APPLICABLE.
13. SUBMIT SHOP DRAWINGS, PRODUCT DATA SHEETS AND WIRING DIAGRAMS FOR ALL ELECTRICAL CONSTRUCTION MATERIALS, DEVICES, EQUIPMENT, APPLIANCES AND SYSTEMS.
14. OBTAIN ALL PERMITS REQUIRED, HAVE THE WORK INSPECTED FOR CODE COMPLIANCE AND PAY ALL FEES FOR INSPECTION AND CERTIFICATION.
15. MAINTAIN CONTINUITY OF EXISTING CIRCUITS AFFECTED BY THIS WORK WHICH MUST REMAIN IN SERVICE.
16. WHERE EXISTING EQUIPMENT IS INDICATED TO BE "CONNECTED" OR "RECONNECTED" TO NEW WIRING, CONDUIT, ETC. THE CONTRACTOR SHALL FABRICATE AND INSTALL THE NEW SYSTEM CONNECTIONS TO MATCH THE CONNECTION POINTS AND OTHER REQUIREMENTS OF THE EXISTING EQUIPMENT. WHERE THE EXISTING EQUIPMENT MUST BE REMOVED AND REINSTALLED TO FACILITATE THE REMOVAL OF THE OLD CONNECTIONS AND/ OR THE CONNECTION OF THE NEW MATERIAL, THAT WORK SHALL BE A PART OF THIS CONTRACT.
17. EXACT LOCATION OF EQUIPMENT SHALL BE COORDINATED IN THE FIELD.
18. REFER TO DRAWINGS AND SPECIFICATIONS OF OTHER TRADES FOR EQUIPMENT LOCATIONS AND CONTROLS.
19. GROUNDING AND BONDING SHALL MEET NEC AND EQUIPMENT / SYSTEM MANUFACTURER'S REQUIREMENTS.
20. CONTRACTOR SHALL BE RESPONSIBLE FOR THE REMOVAL OF DEBRIS GENERATED BY HIS WORK AND WORKERS AT THE END OF EACH WORKING DAY AND FOR GENERAL GOOD HOUSEKEEPING BY HIS WORKERS. CONTRACTOR SHALL PROVIDE REQUIRED REFUSE CONTAINERS.
21. REMOVE AND RELOCATE EXISTING EQUIPMENT, FIXTURES, DEVICES, ETC. AS INDICATED AND AS REQUIRED TO CLEAR NEW WORK. EXTEND AND CONNECT NEW WIRING TO EXISTING.
22. REMOVE AND REINSTALL CEILING SYSTEM AS REQUIRED FOR THE INSTALLATION OF ELECTRICAL WORK AND REPLACE IN KIND ANY COMPONENTS DAMAGED BY PERSONNEL OR EQUIPMENT DURING PERFORMANCE OF THE WORK. COORDINATE WITH ARCHITECT.
23. ALL PENETRATIONS IN FOUNDATION WALLS AND FLOORS INCLUDING SLAB PENETRATIONS SHALL BE SUBSTANTIALLY SEALED BY UTILIZING A NON-CRACKING POLYURETHANE OR SIMILAR CAULK OR EQUIVALENT TO CLOSE OFF THE SOIL GAS ENTRY ROUTES. ALL CONDUITS IN THE SPACE BELOW THE FOUNDATION FLOOR WHICH PENETRATE THESE BARRIERS SHALL HAVE THREADED OR SOLVENTED FITTINGS.
24. EXISTING CONDUIT MAY BE REUSED IF APPROVED BY THE ENGINEER, WHERE SUCH REUSE IS NOT PRACTICABLE, PROVIDE NEW CONDUIT.
25. ALL NEW WIRING IS TO BE RUN CONCEALED WHERE POSSIBLE. PROVIDE PULLBOXES, SIZE AND LOCATION AS REQUIRED.
26. EXPOSED RACEWAY, IF PERMITTED, SHALL BE RUN TRUE, PLUMB AND PARALLEL OR PERPENDICULAR TO BUILDING LINES. [RIGID METAL CONDUIT,] [EMT WITH RAINTIGHT STEEL FITTINGS,] 3/4 INCH MINIMUM, SHALL BE USED OUTDOORS; ELECTRICAL METALLIC TUBING, 3/4 INCH MINIMUM, SHALL BE USED IN INDOOR UNFINISHED SPACES; SURFACE METAL RACEWAY (WIREMOLD) SHALL BE USED IN INDOOR FINISHED SPACES.
27. ALL WIRING SHALL BE COPPER CONDUCTOR WITH 600 VOLTS INSULATION IN METAL RACEWAY WITH APPROVED FITTINGS UNLESS OTHERWISE INDICATED.
28. FEEDERS AND BRANCH CIRCUITS UNDERGROUND IN RACEWAY: TYPE THHN-THWN 90 DEGREE C
29. INTERIOR FEEDERS AND BRANCH CIRCUITS IN RACEWAY: TYPE THHN 90 DEGREE C.
30. BRANCH CIRCUIT HOMERUNS TO FIRST OUTLET: TYPE THHN IN RACEWAY. AFTER THE FIRST OUTLET BOX, APPROVED CABLE MAY BE USED.
31. FEEDERS SHALL BE MINIMUM #8 AWG; BRANCH CIRCUIT WIRING MINIMUM #12 AWG; CONTROL WIRING MINIMUM #14 AWG; UNLESS OTHERWISE INDICATED. FEEDER AND BRANCH CIRCUIT WIRING LARGER THAN #10 AWG SHALL BE STRANDED CONDUCTOR; #10 AWG AND SMALLER, STRANDED CONDUCTOR OR SOLID CONDUCTOR; CONTROL WIRING, STRANDED CONDUCTOR.
32. DO NOT INSTALL CONDUCTORS, WIRES OR CABLES OF ANY OTHER SYSTEM IN THE SAME RACEWAY OR CABLE WITH FIRE ALARM POWER SUPPLY CIRCUITS, NON-POWER LIMITED FIRE ALARM CIRCUITS OR POWER LIMITED FIRE ALARM CIRCUITS.
33. TAPS AND SPLICES FOR BRANCH CIRCUITS AND FEEDERS SHALL BE MADE WITH AN INSULATED TERMINAL BY ILSCO, OR APPROVED EQUAL.
34. BRANCH CIRCUIT AND FEEDER TAPS SHALL BE FULL CIRCUIT SIZE UP TO THEIR OVERCURRENT PROTECTION DEVICE.
35. PROVIDE SEISMIC RESTRAINTS AND ANCHORS FOR ENGINE-DRIVEN GENERATORS AND CONDUITS LARGER THAN 2-1/2" INCHES TRADE DIAMETER. PROVIDE SWAY BRACES FOR CONDUIT AND EQUIPMENT SUSPENDED FROM THE OVERHEAD. PROVIDE ANCHOR BOLTS FOR FLOOR AND WALL MOUNTED EQUIPMENT. COMPLY WITH INTERNATIONAL BUILDING CODE CHAPTER 16 - STRUCTURAL DESIGN AND CHAPTER 17 - STRUCTURAL TESTING AND INSPECTIONS.
36. TEST SWITCHBOARDS, PANELBOARDS, CABLES, CIRCUIT BREAKERS, GROUNDING SYSTEM, GROUND FAULT PROTECTION SYSTEM, GENERATORS, AND TRANSFER SWITCHES IN ACCORDANCE WITH APPLICABLE SECTIONS OF THE CURRENT EDITION OF THE INTERNATIONAL ELECTRICAL TESTING ASSOCIATION ACCEPTANCE TESTING SPECIFICATIONS FOR ELECTRIC POWER DISTRIBUTION EQUIPMENT AND SYSTEMS (NETA ATS). PERFORM EACH VISUAL AND MECHANICAL INSPECTION AND ELECTRICAL TEST LISTED.
37. PROVIDE TWO SETS OF OPERATION AND MAINTENANCE MANUALS, BOUND AND INDEXED, WITH INSTRUCTIONS FOR ALL ELECTRICAL DEVICES, EQUIPMENT, APPLIANCES AND SYSTEMS.
38. PROVIDE ONE SET OF REPRODUCIBLE CONTRACT DRAWINGS, OR DIGITAL DATA FILES USING SAME SOFTWARE PROGRAM, VERSION, AND OPERATING SYSTEM AS CONTRACT DOCUMENTS, THAT HAVE BEEN REVISED AND ANNOTATED TO REFLECT THE AS-BUILT CONDITIONS OF THE PROJECT.
39. DELIVER CERTIFICATES OF ELECTRICAL AND OTHER INSPECTIONS, OR COPIES THEREOF, TO THE OWNER AT THE COMPLETION OF THE PROJECT WITH COPIES TO THE ENGINEER.
40. A CONTRACTOR MAKING A BID FOR WORK ON THIS PROJECT IS MADE AWARE BY THIS NOTE THAT IT IS THE INTENT OF THE OWNER TO HAVE A COMPLETELY INSTALLED JOB. THE CONTRACTOR MAKING A BID FOR THIS WORK WARRANTS THAT HE WILL COMPLETE AND WIRE, PROVIDING ALL NECESSARY ELECTRICAL WORK FOR EQUIPMENT SHOWN AND / OR DETAILED ON ANY PROJECT DRAWINGS OR SPECIFICATIONS AND NOT JUST THOSE COMMONLY REFERRED TO AS A SINGLE TRADE DRAWING UNLESS SPECIFICALLY IDENTIFIED ELSEWHERE AS WORK OF OTHER TRADES. WHERE EQUIPMENT REQUIRING WIRING IS SPECIFIED OR SHOWN ON DRAWINGS OTHER THAN ELECTRICAL DRAWINGS, OR INDICATED, OR IMPLIED, SUCH AS ON SHOP DRAWINGS SUBMITTED LATER, THE CONTRACTOR CAN AND SHALL REQUEST DIRECTION REGARDING CIRCUIT SIZING PROTECTION AND ROUTING WHERE NECESSARY BUT SHALL UNDERSTAND ALL NECESSARY WORK TO COMPLETE THE INSTALLATION SHALL BE PERFORMED AT NO ADDITIONAL COST TO THE OWNER OR PROJECT.
41. THE INSTALLATION OF ALL ELECTRICAL WORK INDICATED ON ALL ELECTRICAL DRAWINGS AND IN THE SPECIFICATIONS AND ANY SUBSEQUENT BULLETINS OR ADDENDA SHALL COMPLY WITH NEW JERSEY ADMINISTRATIVE CODE TITLE 6A.
42. THE SPACE ABOVE THE HUNG CEILING(S) OF (LIST THE ROOMS, SPACES, OR AREAS) IS USED AS A PLENUM FOR THE RETURN OF ENVIRONMENTAL AIR. DO NOT INSTALL EXPOSED WIRING, OR CABLE NOT U. L. LISTED FOR THE PURPOSE; WOOD SUPPORTS OR ANCHORAGES; NONMETALLIC CONDUIT, BOXES OR FITTINGS; OR VINYL, PLASTIC, NYLON, OR OTHER COMBUSTIBLE OR SMOKE PRODUCING IDENTIFICATION OR CONSTRUCTION MATERIALS IN THIS SPACE.
43. PRE-EXISTING CONDITIONS ARE EXEMPT PER NJAC 5:23-6.8(D)10. "EXISTING WORKING CLEARANCES, CLEAR SPACE, ACCESS AND ENTRANCE DIMENSIONS TO WORKING SPACES, ILLUMINATION, HEADROOM CLEARANCES, AND LOCATION OF OVERCURRENT PROTECTION DEVICES SHALL BE ALLOWED TO REMAIN WITHOUT MODIFICATION."
44. A FIRE ALARM SYSTEM MEETING CURRENT CODES IS NOT REQUIRED TO BE INSTALLED IN THE PORTIONS OF THE EXISTING BUILDING THAT ARE NOT BEING RENOVATED, ALTERED OR REMODELED. NJAC 5:23-6.8(B)4.
45. ELECTRICAL CONTRACTOR TO CAREFULLY REMOVE AND STORE EXISTING HUNG CEILING TILES INCLUDING "THE LAY-IN ACOUSTIC CEILING TILES, SUPPORT GRID AND HANGERS" AS REQUIRED TO FACILITATE INSTALLATION OF THE NEW WORK IN THE AFFECTED AREAS. PRIOR TO CEILING REMOVALS THE ELECTRICAL CONTRACTOR SHALL TEMPORARILY SUPPORT ALL EXISTING LIGHT FIXTURES, SENSORS OR OTHER EXISTING WIRED COMPONENTS AS MAY BE REQUIRED TO FACILITATE CEILING REMOVAL. AFTER WORK IS COMPLETED, CONTRACTOR SHALL RE-INSTALL THE EXISTING CEILING GRID AND EXISTING ACOUSTICAL TILES. CONTRACTOR IS RESPONSIBLE FOR REPLACING ANY DAMAGED GRID, TILE AND/OR FIXTURE THAT MIGHT OCCUR DURING DEMOLITION AND/OR RE-INSTALLATION OF THE EXISTING CEILING. NEW GRID/TILES AND FIXTURE TO MATCH EXISTING. PATCH AND REPAIR ALL SURFACES DAMAGED TO MATCH EXISTING ADJACENT FINISH.
46. UPON AWARD OF CONTRACT AND SUBSEQUENT APPROVAL OF SHOP DRAWINGS BY ENGINEER OF RECORD, THE CONTRACTOR SHALL FILL OUT AND FILE AIR PERMIT APPLICATIONS IN A TIMELY MANNER FOR GENERATORS. THE CONTRACTOR SHALL PAY ALL FEES FOR THE PERMITS AND INSPECTIONS. PROVIDE THE OWNER AND ENGINEER EACH WITH A COPY OF FILLED OUT FORMS PRIOR TO MAILING. CONTRACTOR MUST SECURE PERMIT PRIOR TO PROJECT CLOSEOUT. SEND FORMS ALONG WITH NJDEP'S REQUIRED FEE TO: NEW JERSEY DEPARTMENT OF ENVIRONMENTAL PROTECTION AND ENERGY BUREAU OF SOURCE REVIEW, CN-27, TRENTON, NEW JERSEY 08625-0027.

DEMOLITION NOTES:

1. DEMOLITION SHALL INCLUDE THE REMOVAL OF ALL ASSOCIATED WIRING, CONDUIT, DISCONNECT SWITCHES, ETC UNLESS SPECIFICALLY NOTED OTHERWISE.
2. THE CONTRACTOR SHALL PERFORM DEMOLITION AND REMOVAL WORK WITH MINIMUM INTERFERENCE WITH FUNCTIONING ELECTRICAL SYSTEMS. ALL AFFECTED SYSTEMS SHALL BE RECONNECTED AND RESTORED.
3. DEMOLITION AND REMOVAL WORK SHALL BE PERFORMED IN A NEAT AND WORKMANLIKE MANNER. THE CONTRACTOR SHALL PATCH, REPAIR OR OTHERWISE RESTORE ANY DAMAGED INTERIOR OR EXTERIOR BUILDING SURFACE TO ITS ORIGINAL CONDITION.
4. ALL UNUSED OUTLET BOXES OR CAPPED FLOOR OUTLETS SHALL BE PROVIDED WITH MATCHING BLANK COVERS.
5. EXISTING PANEL DIRECTORIES AFFECTED BY THE WORK SHALL BE MODIFIED TO REFLECT THE BRANCH CIRCUIT WIRING CHANGES.
6. PORTIONS OF FEEDER RUNS TO BE REMOVED OR ABANDONED AS A RESULT OF DEMOLITION WORK, BUT WHICH ARE REQUIRED TO REMAIN ENERGIZED, SHALL BE CUT AT CONVENIENT LOCATIONS, REROUTED AND RECONNECTED. NEW FEEDER EXTENSIONS SHALL MATCH EXISTING ONES IN ALL RESPECTS, CABLE TYPE, CONDUCTOR AMPACITY, CONDUIT SIZES, ETC.
7. ELECTRICAL CONTRACTOR SHALL BE RESPONSIBLE FOR THE PROPER HANDLING, DISPOSAL, AND ASSOCIATED COSTS OF ALL MATERIAL REMOVED FROM FIXTURES, DURING THIS CONTRACT, IN ACCORDANCE WITH ALL FEDERAL, STATE, AND LOCAL CODES AND/OR REGULATIONS.
8. DISCONNECT AND REMOVE FROM THE PREMISES, OR STORE ON THE PREMISES, IF REQUESTED BY THE OWNER, ALL EQUIPMENT AND LIGHT FIXTURES, AND SUPPORTING DEVICES REMOVED AS A RESULT OF THIS WORK.
9. ELECTRICAL CONTRACTOR SHALL BE RESPONSIBLE FOR ANY DAMAGE TO THE EXISTING CEILING SYSTEM INCLUDING BUT NOT LIMITED TO GRID, TILES, AND SUPPORT AND SHALL REPLACE IN KIND ANY DAMAGED CEILING COMPONENTS.

FIRE ALARM DEVICE LEGEND

SYMBOLS	DESCRIPTION
	FIRE ALARM HORN / STROBE
	FIRE ALARM STROBE
F	FIRE ALARM MANUAL PULL STATION
SD	DUCT SMOKE DETECTOR
CO	CARBON MONOXIDE DETECTOR
CM	CONTROL MODULE
S, S^A	CEILING MOUNTED SMOKE DETECTOR. "A" INDICATES MOUNTED ABOVE CEILING.
R, R^A	CEILING MOUNTED RATE OF RISE HEAT DETECTOR, "A" INDICATES MOUNTED ABOVE CEILING.
H, H^A	CEILING MOUNTED HEAT DETECTOR, 135° UON. "A" INDICATES MOUNTED ABOVE CEILING.

LOW VOLTAGE DEVICE LEGEND

SYMBOLS	DESCRIPTION
	DATA COMMUNICATIONS OUTLET: 1-GANG JUNCTION BOX WITH 3/4" CONDUIT AND PULLSTRING UP TO ACCESSIBLE CEILING.
	VOICE COMMUNICATIONS OUTLET: 2-GANG JUNCTION BOX WITH 3/4" CONDUIT AND PULLSTRING UP TO ACCESSIBLE CEILING.
	COMBINATION VOICE & DATA COMMUNICATION OUTLET: 2-GANG JUNCTION BOX WITH 3/4" CONDUIT AND PULLSTRING UP TO ACCESSIBLE CEILING.
	INTERCOM SYSTEM CALL SWITCH
P	PROJECTOR COMMUNICATIONS OUTLET: 2-GANG JUNCTION BOX WITH 3/4" CONDUIT AND PULLSTRING FROM THE PROJECTOR TO THE MATCHING COMMUNICATIONS OUTLET IN THE FLOORBOX AT THE TEACHERS DESK. PROVIDE (1) VGA WIRE, (1) USB WIRE, AND (2) RCA WIRES BETWEEN THESE TWO LOCATIONS. PROVIDE MATCHING FEMALE ENDS / JACKS AND COVER PLATES AT BOTH LOCATIONS.
TV	CATV JACK: 2-GANG JUNCTION BOX WITH 3/4" CONDUIT AND PULLSTRING UP TO ACCESSIBLE CEILING.
M	MICROPHONE
S	INTERCOM SYSTEM SPEAKER, CEILING MOUNTED
S	SPEAKER, WALL MOUNTED
C	SYSTEM CLOCK, WALL MOUNTED, MODEL TELECOR 2440.
CB	CALL BUTTON

MOUNTING HEIGHTS

HEIGHT	DESCRIPTION
10'-0"	EMERGENCY BATTERY UNITS (OR 1'-0" BELOW CEILING)
90" TO 6" BELOW CLG	FIRE ALARM AUDIBLE ALARM SIGNALS
7'-6" TO 8'-0"	FIRE ALARM COMBINATION ALARM SIGNALS
7'-0" TO 8'-0"	FIRE ALARM VISUAL SIGNALS
6'-6"	TOP OF ELECTRICAL PANEL BOARDS (LIGHTING OR POWER)
6'-0"	TOP OF HIGHEST ELECTRICAL DISCONNECT SWITCH OR STARTER
4'-0"	TOP OF WALL MOUNTED DEVICES SUCH AS LIGHT SWITCHES, MANUAL MOTOR STARTERS, THERMOSTATS, TELEPHONE/INTERCOM HANDSETS, FIRE ALARM PULLSTATIONS, ETC.
1'-6"	BOTTOM OF RECEPTACLES, TELEPHONE/TELEDATA OUTLETS, TELEVISION JACKS, ETC
0'-0"	FINISHED FLOOR ELEVATION.

APPLICABLE CODES:

ALL WORK SHALL BE IN STRICT ACCORDANCE WITH THE LATEST CODES AND SUBCODES AS ADOPTED BY THE STATE OF NEW JERSEY:

- NEW JERSEY UNIFORM CONSTRUCTION CODE (NJUCC)
- REHABILITATION SUBCODE 5:23-6
- ADMINISTRATIVE CODE: TITLE 6
- 2018 INTERNATIONAL BUILDING CODE - NJ EDITION
- 2017 NATIONAL ELECTRICAL CODE
- 2016 NFPA 13
- 2016 ASHRAE 90.1 ENERGY CONSERVATION CODE
- REQUIREMENTS OF LOCAL AUTHORITY HAVING JURISDICTION.

WIRING DEVICE LEGEND

SYMBOLS	DESCRIPTION
	NEMA 5-20R SIMPLEX RECEPTACLE. "X" INDICATES CIRCUIT NUMBER. SYMBOL WITH LINE THRU IT DENOTES MOUNTED ABOVE 18". COORDINATE HEIGHT WITH ARCHITECTURAL DRAWINGS.
	NEMA 5-20R DUPLEX RECEPTACLE. "X" INDICATES CIRCUIT NUMBER. SYMBOL WITH LINE THRU IT DENOTES MOUNTED ABOVE 18". COORDINATE HEIGHT WITH ARCHITECTURAL DRAWINGS.
	NEMA 5-20R DUPLEX RECEPTACLE WITH GROUND FAULT INTERRUPTER. "X" INDICATES CIRCUIT NUMBER. SYMBOL WITH LINE THRU IT DENOTES MOUNTED ABOVE 18". COORDINATE HEIGHT WITH ARCHITECTURAL DRAWINGS.
	NEMA 5-20R DOUBLE DUPLEX RECEPTACLE. "X" INDICATES CIRCUIT NUMBER. COORDINATE HEIGHT WITH ARCHITECTURAL DRAWINGS.
	DUAL COMPARTMENT SURFACE RACEWAY, SIMILAR TO WIREMOLD #4000.
RC X	NEMA 5-20R CEILING MOUNTED RECEPTACLE. "RC" INDICATES CORD REEL."RC2" INDICATES TWO CORD REELS. "X" INDICATES CIRCUIT NUMBER. RETRACTABLE CORD REEL MODEL# HBLC40123TT, UNLESS OTHERWISE NOTED.
F1	1-GANG CAST IRON FLOOR BOX: WALKER #880CS1-1 WITH (1) #817B FLUSH BRASS FLANGE, (1) #828R BRASS COVER PLATE AND THE FOLLOWING DEVICE(S): (1) 120V, 1Ø, 20A DUPLEX RECEPTACLE.
F2	2-GANG CAST IRON FLOOR BOX: WALKER #880CS2-1 WITH (1) #827B FLUSH BRASS FLANGE, (1) #828R BRASS COVER PLATE [FOR POWER], (1) #828GFITC BRASS COVER PLATE [FOR TELEDATA], AND THE FOLLOWING DEVICE(S): (1) 120V, 1Ø, 20A DUPLEX RECEPTACLE.
S^X	SINGLE POLE LIGHT SWITCH 20A, 120/277V. "X" INDICATES FIXTURE CONTROLLED.
S3^X	THREE WAY LIGHT SWITCH 20A, 120/277V . "X" INDICATES FIXTURE CONTROLLED.
S_D	DIMMER SWITCH 20A, 120/277V . "X" INDICATES FIXTURE CONTROLLED.
SK^X	KEYED LIGHT SWITCH 20A, 120/277V . "X" INDICATES FIXTURE CONTROLLED.

POWER DEVICE LEGEND

SYMBOLS	DESCRIPTION
	SURFACE MOUNTED PANELBOARD, POWER AND LIGHTING
	RECESSED PANELBOARD, POWER AND LIGHTING
	HOMERUN TO PANELBOARD
J	JUNCTION BOX - WALL MOUNTED
J	JUNCTION BOX - CEILING MOUNTED
M	MOTOR
X/Y/Z	DISCONNECT SWITCH, "X" INDICATES SWITCH SIZE, "Y" INDICATES NUMBER OF POLES, "Z" INDICATES FUSE SIZE (NF = NON-FUSED).
X/Y/Z	COMBINATION MAGNETIC MOTOR STARTER AND DISCONNECT SWITCH. "X" INDICATES SWITCH SIZE, "Y" INDICATES NUMBER OF POLES, "Z" INDICATES FUSE SIZE (NF = NON-FUSED).
S_M	MOTOR RATED DISCONNECT SWITCH.
E	EMERGENCY PUSH BUTTON
E_K	EMERGENCY PUSH BUTTON. "K" INDICATES KEY OPERATED SWITCH.

ABBREVIATIONS

A	AMPERE	GND, G	GROUND
AFF	ABOVE FINISHED FLOOR	IC	INTERRUPTING CAPACITY
AFG	ABOVE FINISHED GRADE	IG	ISOLATED GROUND
C	CONDUIT(S)	I/L	INTERLOCKED
CB	CIRCUIT BREAKER	MC	MECHANICAL CONTRACTOR
CH	COUNTER HEIGHT	MOD	MOTOR OPERATED DAMPER
CO	CONDUIT ONLY	NIC	NOT IN CONTRACT
CT	CURRENT TRANSFORMER	NL	NIGHT LIGHT
CU	COPPER	NTS	NOT TO SCALE
EC	ELECTRICAL CONTRACTOR	RGS	RIGID GALVANIZED STEEL
EG	EQUIPMENT GROUND	RL	RELOCATED DEVICE
EM	EMERGENCY	SPD	SURGE PROTECTIVE DEVICE
EMT	ELECTRICAL METALLIC TUBING	TVSS	TRANSIENT VOLTAGE SURGE SUPPRESSOR
ETR	EXISTING TO REMAIN	TYP	TYPICAL
EWC	ELECTRIC WATER COOLER	T/C	TIME CLOCK
FA	FIRE ALARM	UON	UNLESS OTHERWISE NOTED
FBO	FURNISHED BY OTHERS	UPS	UNINTERRUPTIBLE POWER SUPPLY
GFI	GROUND FAULT INTERRUPTER	V	VOLTS
		W	WALL MOUNTED
		WP	WEATHERPROOF
		XFMR	TRANSFORMER

SYMBOL LIST NOTES

1. SYMBOLS ARE INDICATED FOR GENERAL REFERENCE ONLY. THE PRESENCE OF A SYMBOL DOES NOT INDICATE ITS USE ON THIS PROJECT. REFER TO PLAN DRAWINGS FOR SPECIFIC SYMBOLS USED.

LIGHT FIXTURE SCHEDULE

TYPE	SYMBOL	DESCRIPTION	MANUFACTURER	CATALOG NO.	LAMPS	BALLAST TYPE	BALLAST QTY	VOLTS	TOTAL WATTAGE	MOUNTING
A		2'X4' FIXTURE, ARCHITECTURAL RECESSED LED LUMINAIRE WITH CLASSIC LINES.	LITHONIA	2GTL-4-48L-EZ1-LP835	LED	LD	1	UNV	36	RECESSED
AE		2'X4' FIXTURE, ARCHITECTURAL RECESSED LED LUMINAIRE WITH CLASSIC LINES, 90 MINUTE EMERGENCY BATTERY BACKUP DIMMING DRIVER.	LITHONIA	2GTL-4-48L-EZ1-LP835-E10WLCP	LED	LD	1	UNV	36	RECESSED
B		2'X2' FIXTURE, ARCHITECTURAL RECESSED LED LUMINAIRE WITH CLASSIC LINES.	LITHONIA	2GTL-2-48L-EZ1-LP835-E10WLCP	LED	LD	1	UNV	28	RECESSED
C		6" FIXTURE, ARCHITECTURAL RECESSED LED LUMINAIRE.	LITHONIA	RV6 35/06 R06AR 120	LED	LD	1	120	6	RECESSED

NOTES:

1. VERIFY ALL CEILING TYPES PRIOR TO ORDERING FIXTURES
2. VERIFY ALL OPERATING VOLTAGES PRIOR TO ORDERING FIXTURES
3. COORDINATE THE HEIGHT OF ALL SUSPENDED FIXTURES WITH THE OWNER, ARCHITECT, AND ENGINEER PRIOR TO INSTALLATION
4. ALL LAMPS SHALL HAVE A COLOR TEMPERATURE OF 3500 DEG. KELVIN AND A CRI OF 85 UNLESS SPECIFICALLY NOTED OTHERWISE

BALLAST TYPES

L LED DRIVER
LD LED DIMMING DRIVER

EMERGENCY FIXTURES

FIXTURES DESIGNATED WITH A "1/2 SHADE" OR "FULL SHADE" AND ALL EXIT SIGNS SHALL HAVE AN EMERGENCY BATTERY PACK, UNLESS SPECIFICALLY NOTED OTHERWISE. BATTERY SHALL BE ABLE TO OPERATE LINEAR FLUORESCENT LAMPS (MINIMUM 1300 LUMENS), COMPACT FLUORESCENT LAMP (MINIMUM 600 LUMENS), OR ENTIRE LED FIXTURE FOR MINIMUM 90 MINS.

PANEL SCHEDULES

HMEC (EXISTING)

JOB NAME: Wildwood Culinary Lab — JOB: NO.: 10543.004
RATING: 208/120V, 3 PH, 4W, 225A — LOCATION: Dish Wash Rm (103)

KEY NOTE	CKT. NO.	CIRCUIT DESCRIPTION	POLE	LOAD KVA	BKR.	BRANCH CIRCUIT	A	B	C	BRANCH CIRCUIT	BKR.	LOAD KVA	POLE	CIRCUIT DESCRIPTION	CKT. NO.	KEY NOTE
3	1	CLASS RM 106 - RECEPTACLES	1	0.5	20	2#12 & 1#12EG IN 3/4"C	1.4			2#12 & 1#12EG IN 3/4"C	20	0.9	1	TRIPLE DOOR FREEZER	2	3
3	3	CLASS RM 106 - RECEPTACLES	1	0.3	20	2#12 & 1#12EG IN 3/4"C		0.5		EXISTING	20	0.2	1	EXISTING SOLENOID VALVE	4	
	5	EXISTING CIRCUIT	1	0.5	20	EXISTING			0.7	2#12 & 1#12EG IN 3/4"C	20	0.2	1	SOLENOID VALVE	6	3
3	7	SPARE	1		20		0.7			2#12 & 1#12EG IN 3/4"C	20	0.7	1	WASHER	8	3
3	9	LCD PROJECTOR	1	0.5	20	2#12 & 1#12EG IN 3/4"C		0.7		2#12 & 1#12EG IN 3/4"C	20	0.2	1	CONTROLS	10	3
3	11	EXISTING REFRIGERATOR	1	0.7	20	2#12 & 1#12EG IN 3/4"C			1.4	EXISTING	20	0.7	1	EXISTING ROOM LIGHTING	12	
4	13	DRYER	2	1.2	30	3#10 & 1#10EG IN 3/4"C	2.5			3#12 & 1#12EG IN 3/4"C	20	1.3	3	KEF-1	14	2
4	15			1.2				2.5				1.3			16	2
3	17	6 BURNER GAS STOVE	1	0.7	20	2#12 & 1#12EG IN 3/4"C			2.0			1.3			18	2
3	19	SHUNT TRIP SPACE					1.3			3#12 & 1#12EG IN 3/4"C	20	1.3	3	KEF-2	20	2
1	21	HOOD LTS / ANSUL SYSTEM	1	0.7	20	2#12 & 1#12EG IN 3/4"C		2.0				1.3			22	2
1	23	HOOD LTS / ANSUL SYSTEM	1	0.7	20	2#12 & 1#12EG IN 3/4"C			2.0			1.3			24	2
1	25	DISH WASHER	2	1.2	40	3#8 & 1#10EG IN 1"C	1.9			2#12 & 1#12EG IN 3/4"C	15	0.7	1	CP-1	26	1
1	27			1.2				1.5		2#12 & 1#12EG IN 3/4"C	20	0.3	1	MOTORIZED DAMPERS	28	1
1	29	KEF-3	1	0.9	20	2#12 & 1#12EG IN 3/4"C			1.3	2#12 & 1#12EG IN 3/4"C	20	0.4	1	ROOFTOP RECEPTACLES	30	1
							7.8	7.2	7.4							

PANEL TYPE: NEMA 1
MOUNTING: SURFACE
MAIN LUGS ONLY
INTERRUPTING RATING: 22KA SYM.
FED FROM: 800 AMP DISTRIBUTION PANEL IN STORAGE RM 113

TOTAL CONNECTED LOAD.: 22.4 KVA
62.2 AMPS

NOTES
1. ALL BUSING TO BE COPPER
2. BOLT ON BREAKERS ONLY
3. CONTRACTOR IS RESPONSIBLE TO COORDINATE THE SHORT CIRCUIT RATING PRIOR TO PURCHASING ANY EQUIPMENT.
4. ALL WIRE SIZES ARE BASED ON 75 DEGREE WIRE.
5. SHORT CIRCUIT RATING: PANEL SHALL BE FULLY RATED TO INTERRUPT SYMMETRICAL SHORT CIRCUIT CURRENT AVAILABLE AT TERMINALS.

A-HVAC (EXISTING)

JOB NAME: Wildwood Culinary Lab — JOB: NO.: 10543.004
RATING: 208/120V, 3 PH, 4W, 400A — LOCATION: Light Room Back Stage

KEY NOTE	CKT. NO.	CIRCUIT DESCRIPTION	POLE	LOAD KVA	BKR.	BRANCH CIRCUIT	A	B	C	BRANCH CIRCUIT	BKR.	LOAD KVA	POLE	CIRCUIT DESCRIPTION	CKT. NO.
	1	EXISTING TEMP BOILER TRAILER OFF POSITION	3	6.0	100	EXISTING	6.5			EXISTING CIRCUIT	20	0.5	1	EXISTING RM 111 PROJECTOR	2
	3			6.0				6.5		EXISTING CIRCUIT	20	0.5	1	EXISTING DIMMER CABINET	4
	5			6.0					6.0		20		1	SPARE	6
3	7	MOTORIZED DAMPERS	1	0.5	20	2#12 & 1#12EG IN 3/4"C	0.5				20		1	SPARE	8
2	9	AHU-1	3	0.8	15	3#12 & 1#12EG IN 3/4"C		0.8			20		1	SPARE	10
2	11			0.8					0.8		20		1	SPARE	12
2	13			0.8			0.8				20		1	SPARE	14
2	15	MUA-1	3	2.1	30	3#10 & 1#10EG IN 3/4"C		2.1			20		1	SPARE	16
2	17			2.1					2.1		20		1	SPARE	18
2	19			2.1			2.1				20		1	SPARE	20
3	21	ATC CONTROL PANEL	1	0.5	20	2#12 & 1#12EG IN 3/4"C		0.5			20		1	SPARE	22
	23	SPARE	1		20				0.0		20		1	SPARE	24
	25	SPARE	1		20		0.0				20		1	SPARE	26
	27	SPARE	1		20			0.0			20		1	SPARE	28
	29	SPARE	1		20				0.0		20		1	SPARE	30
						TOTAL (PHASE):	9.9	9.9	8.9						

PANEL TYPE: NEMA 1
MOUNTING: SURFACE
MAIN LUGS ONLY
INTERRUPTING RATING: EXISTING KA SYM.
FED FROM:

TOTAL CONNECTED LOAD.: 28.7 KVA
79.8 AMPS

NOTES
1. ALL BUSING TO BE COPPER
2. BOLT ON BREAKERS ONLY
3. CONTRACTOR IS RESPONSIBLE TO COORDINATE THE SHORT CIRCUIT RATING PRIOR TO PURCHASING ANY EQUIPMENT.
4. ALL WIRE SIZES ARE BASED ON 75 DEGREE WIRE.
5. SHORT CIRCUIT RATING: PANEL SHALL BE FULLY RATED TO INTERRUPT SYMMETRICAL SHORT CIRCUIT CURRENT AVAILABLE AT TERMINALS.

PANEL SCHEDULE KEY NOTES

1. REMOVE EXISTING SPACE PLATE. PROVIDE NEW CIRCUIT BREAKER AS SHOWN, RATING SHALL MATCH EXISTING PANEL INCLUDING AIC RATING.
2. REMOVE EXISTING CIRCUIT BREAKER(S). PROVIDE NEW CIRCUIT BREAKER AS SHOWN, RATING SHALL MATCH EXISTING PANEL INCLUDING AIC RATING.
3. REUSE EXISTING 20A/1P CIRCUIT BREAKERS. CIRCUIT TO NEW EQUIPMENT SHOWN.
4. REUSE EXISTING 30A/2P CIRCUIT BREAKERS. CIRCUIT TO NEW EQUIPMENT SHOWN.

JOHN J. VEISZ, AIA, CSBA
NJ - 21AI00866900 | PA - RA010819B
WILLIAM D. HOPKINS III, AIA, LEED AP
NJ - 21AI01706000 | PA - RA012520X
GEORGE R. DUTHIE JR., AIA, PP
NJ - 21AI01299200
Architect — Date 12/20/19

FVHD architects planners
EST 1918
Fraytak Veisz Hopkins Duthie PC
Corporate: 1515 Lower Ferry Road - Trenton - New Jersey 08628
Pennsylvania: 140 Whitaker Ave - Mont Clare - Pennsylvania 19453
FVHDPC.COM

FPA FRENCH & PARRELLO ASSOCIATES
Corporate Office
1800 Route 34, Suite 101
Wall, NJ 07719
732.312.9800
Regional Offices
Hackettstown, NJ
New York, NY
AMIN H. GOMAA, PE
PROFESSIONAL ENGINEER, NJ LIC. No. 24GE04842100

Project Name: Culinary Arts Classroom Renovation at Wildwood Middle/ High School

Project Owner Name: Wildwood School District

Project Location: 4300 Pacific Avenue Wildwood, NJ 08260

Project Number: 5059

Project Date: 12-20-2019

Checked By: AHG

Drawn By: MJB

Scale: AS SHOWN

Drawing Name: ELECTRICAL SYMBOLS, NOTES AND ABBREVIATIONS

Revisions No.	Date	Description

Drawing Number: E1.0

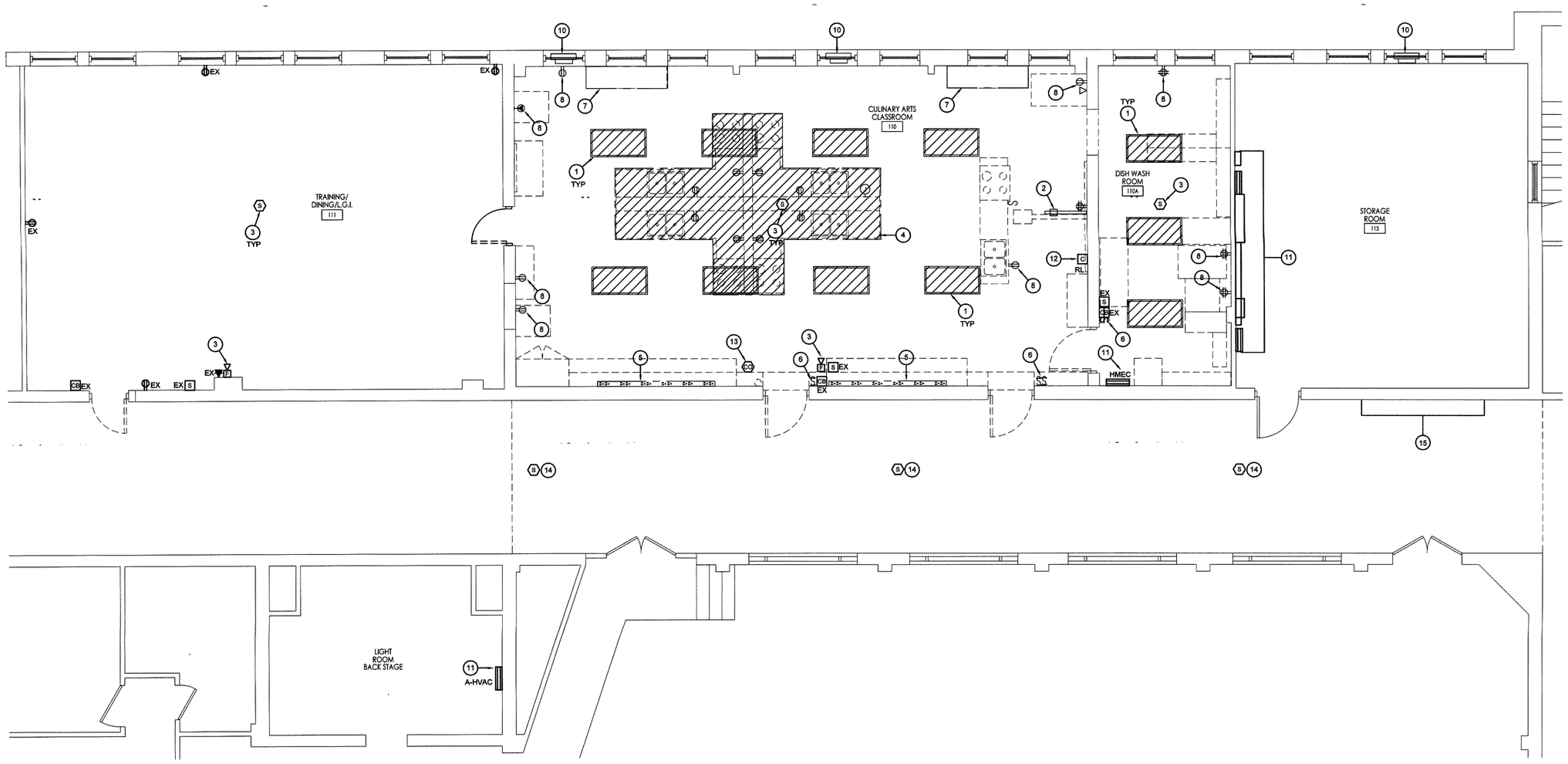

DEMOLITION WORK PLAN

SCALE: 1/4" = 1'-0"

SHEET NOTES

1. ALL EXISTING ELECTRICAL FIXTURES SHOWN ON THIS PLAN TO BE REMOVED AND REPLACED WITH NEW, UNLESS OTHERWISE NOTED. EXISTING CIRCUIT PRESENTLY SERVING EXISTING FIXTURES TO REMAIN AND BE REUSED FOR NEW FIXTURES. REFER TO ELECTRICAL FLOOR PLANS FOR ADDITIONAL INFORMATION.
2. MAINTAIN CONTINUITY OF ALL BRANCH CIRCUITS TO EXISTING WIRING DEVICES AND LIGHTING TO REMAIN.
3. MAINTAIN CONTINUITY OF ALL FIRE ALARM CIRCUITS AND TEMPORARILY SUPPORT SMOKE DETECTORS FROM STRUCTURAL CEILING DURING DEMOLITION FOR RE-INSTALLATION TO NEW CEILING AS REQUIRED.
4. CONTRACTOR SHALL REMOVE ANY LOSS OR ABANDONED POWER OR LOW VOLTAGE WIRING BACK TO SOURCE.

DEMOLITION KEY NOTES

1. EXISTING LIGHTING FIXTURES TO BE DISCONNECTED REMOVED. COIL EXISTING BRANCH CIRCUIT WIRING FOR RECONNECTION TO NEW LIGHTING FIXTURES AND CONTROLS. REFER TO NEW WORK PLAN (TYPICAL).
2. EXISTING WALL MOUNTED PROJECTOR TO BE DISCONNECTED, RELOCATED. REMOVE WIRING BACK TO SOURCE.
3. EXISTING FIRE ALARM DEVICES TO BE DISCONNECTED AND REMOVED. RECOIL WIRE AND LEAVE IN SAFE CONDITION. REFER TO NEW WORK PLAN (TYPICAL).
4. EXISTING WORKSTATIONS, STOVES, DISHWASHER - RECEPTACLE(S), JUNCTION BOXES TO BE DISCONNECTED, REMOVED. REMOVE WIRING BACK TO SOURCE.
5. EXISTING PLUGMOLD TO BE DISCONNECTED, REMOVED. REMOVE WIRING BACK TO SOURCE.
6. EXISTING SWITCHES TO BE DISCONNECTED, REMOVED AND REPLACED WITH NEW. REFER TO NEW WORK PLANS FOR NEW LIGHTING CONTROLS AND SWITCHING ARRANGEMENT.
7. EXISTING UNIT VENTILATOR TO BE DISCONNECTED, REMOVED. REMOVE WIRING BACK TO SOURCE.
8. EXISTING RECEPTACLES(S) TO BE DISCONNECTED, REMOVED. REMOVE WIRING BACK TO SOURCE.
9. EXISTING JUNCTION BOXES, REMOVED AND REPLACED WITH NEW. REFER TO NEW WORK PLANS FOR NEW LIGHTING CONTROLS AND SWITCHING ARRANGEMENT.
10. EXISTING EXHAUST FANS TO BE DISCONNECTED, REMOVED. REMOVE WIRING BACK TO SOURCE.
11. EXISTING ELECTRICAL PANELS TO REMAIN.
12. EXISTING CLOCK TO BE RELOCATED. COIL EXISTING BRANCH CIRCUIT WIRING FOR RECONNECTION TO NEW LOCATION. REFER TO NEW WORK PLAN (TYPICAL).
13. EXISTING FIRE ALARM DEVICE TO BE DISCONNECTED AND REMOVED. REMOVE WIRING BACK TO SOURCE.
14. EXISTING SMOKE DETECTORS TO BE DISCONNECTED AND RELOCATED IN CEILING DUE TO NEW DUCT WORK. RECOIL WIRE AND LEAVE IN SAFE CONDITION. REFER TO NEW WORK PLAN (TYPICAL).
15. EXISTING CONDUIT TO BE DISCONNECTED AND RELOCATED ON WALL DUE TO NEW DUCT WORK. EXTEND CONDUIT AROUND NEW DUCT WORK.

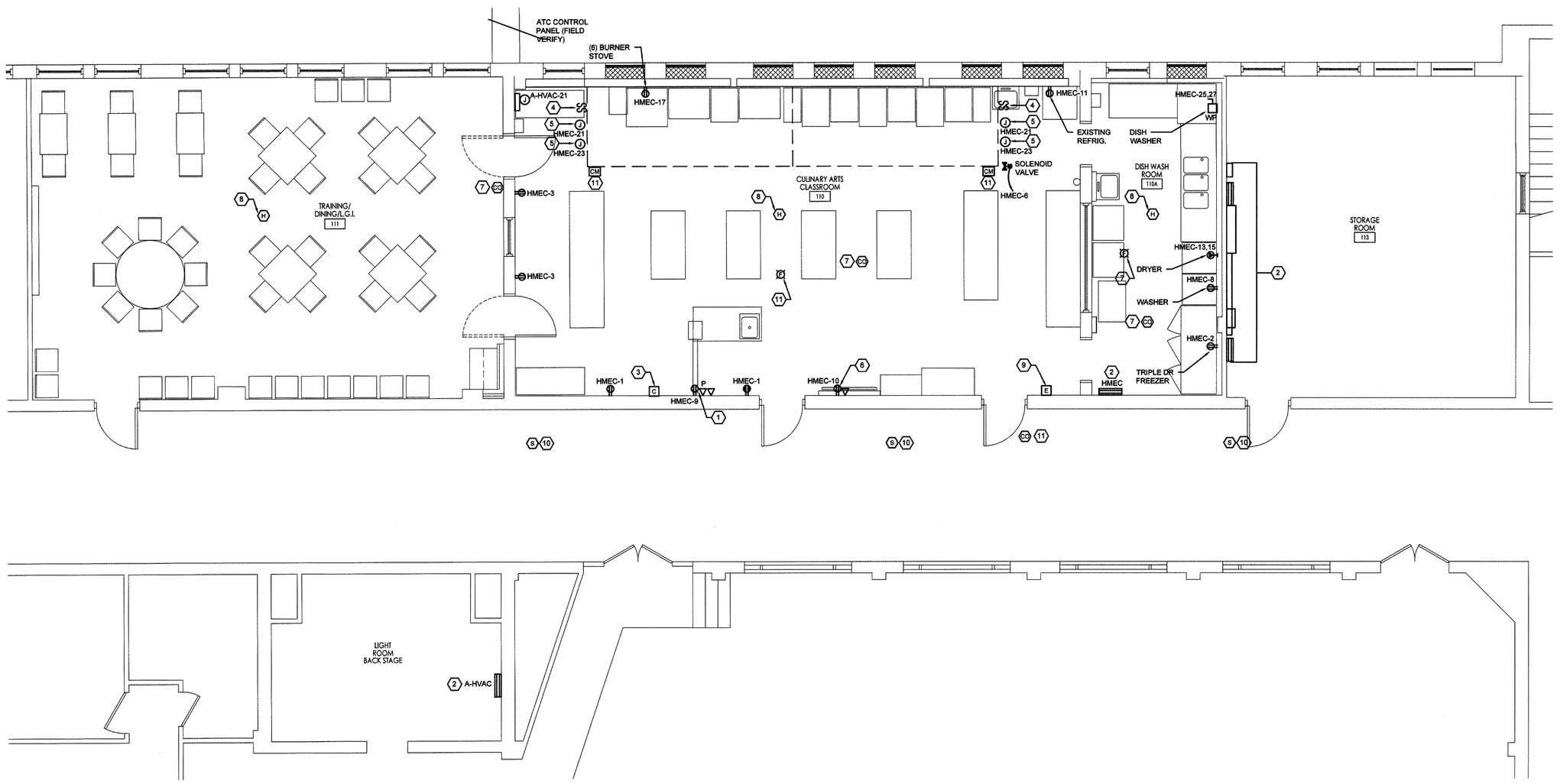

NEW WORK PLAN - POWER

SCALE: 1/4" = 1'-0"

KEY NOTES

1. RELOCATED LCD PROJECTOR. DEVICES MOUNTED HIGH ON THE WALL, FIELD VERIFY EXACT LOCATION.
2. EXISTING ELECTRICAL PANELS TO REMAIN.
3. RELOCATED CLOCK: CONTRACTOR SHALL EXTEND EXISTING BRANCH CIRCUIT TO THIS LOCATION. (TYPICAL)
4. CONTRACTOR SHALL PROVIDE TWO TOGGLE SWITCHES, ONE TO TURN ON/OFF THE LIGHTS UNDER THE HOOD AND ONE TO TURN ON/OFF THE HOOD EXHAUST FAN. CONTRACTOR SHALL PROVIDE ALL REQUIRED WIRING BETWEEN THESE SWITCHES AND THE EQUIPMENT THEY SERVE. NOTE THAT THE EXHAUST FAN IS LOCATED ON THE ROOF. COORDINATE EXACT LOCATION OF THESE SWITCHES WITH THE OWNER PRIOR TO INSTALLATION.
5. JUNCTION BOXES AND POWER WIRING FOR HOOD LED LIGHTS AND ANSUL SYSTEM. FIELD COORDINATE EXACT LOCATION WITH THE HOOD SYSTEM INSTALLER.
6. LCD FLAT SCREEN SMART TV's WALL MOUNTED. FIELD VERIFY ELECTRICAL DEVICES LOCATIONS WITH TV VENDOR PRIOR TO ROUGH IN.
7. NEW FIRE ALARM DEVICE(S). WIRE TO EXISTING FIRE ALARM SYSTEM. PROVIDE TESTING AND PROGRAMING.
8. NEW HEAT DETECTOR(S) CONTRACTOR SHALL CONNECT WIRE NEW DEVICE FROM REMOVED SMOKE DETECTOR . PROVIDE TESTING AND PROGRAMING.
9. EMERGENCY PUSH BUTTON SWITCH. REFER TO PLUMBING DRAWING FOR ADDITIONAL INFORMATION.
10. RELOCATED SMOKE DETECTORS OUT OF THE PATHWAY OF NEW DUCT WORK EXTEND WIRE TO EXISTING FIRE ALARM SYSTEM. PROVIDE TESTING AND PROGRAMING.
11. NEW FIRE ALARM DEVICE(S) EXTEND EXISTING WIRE FROM REMOVED HORN/STROBE. PROVIDE TESTING AND PROGRAMING.

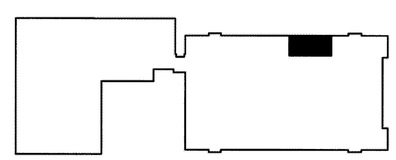

KEY PLAN

SCALE: NONE

JOHN J. VEISZ, AIA, CSBA
NJ - 21A05944900 | PA - RA029018

WILLIAM D. HOPKINS III, AIA, LEED AP
NJ - 21A07106300 | PA - RA022324

GEORGE R. DUTHIE JR., AIA, PP
NJ - 21A03797200

12/20/19
Date

FVHD architects planners
Fraytak Veisz Hopkins Duthie P C
FVHDPC.COM
Corporate: 1515 Lower Ferry Road - Trenton - New Jersey 08628
Pennsylvania: 140 Whitaker Ave - Mont Clare - Pennsylvania 19453

FRENCH & PARRELLO ASSOCIATES
Corporate Office
1800 Route 34, Suite 101
Wall, NJ 07719
732.312.9800
Regional Offices
Hackettstown, NJ
New York, NY

AMIN H. GOMAA, PE
PROFESSIONAL ENGINEER, NJ LIC. No. 24GE04842100

Project Name
Culinary Arts Classroom Renovation at Wildwood Middle/ High School

Project Owner Name
Wildwood School District

Project Location
4300 Pacific Avenue
Wildwood, NJ
08260

Project Number
5059

Project Date
12-20-2019

Checked By
AHG

Drawn By
MJB

Scale
AS SHOWN

Drawing Name
ELECTRICAL DEMOLITION AND NEW WORK PLANS

Revisions

No.	Date	Description

Drawing Number
E2.0

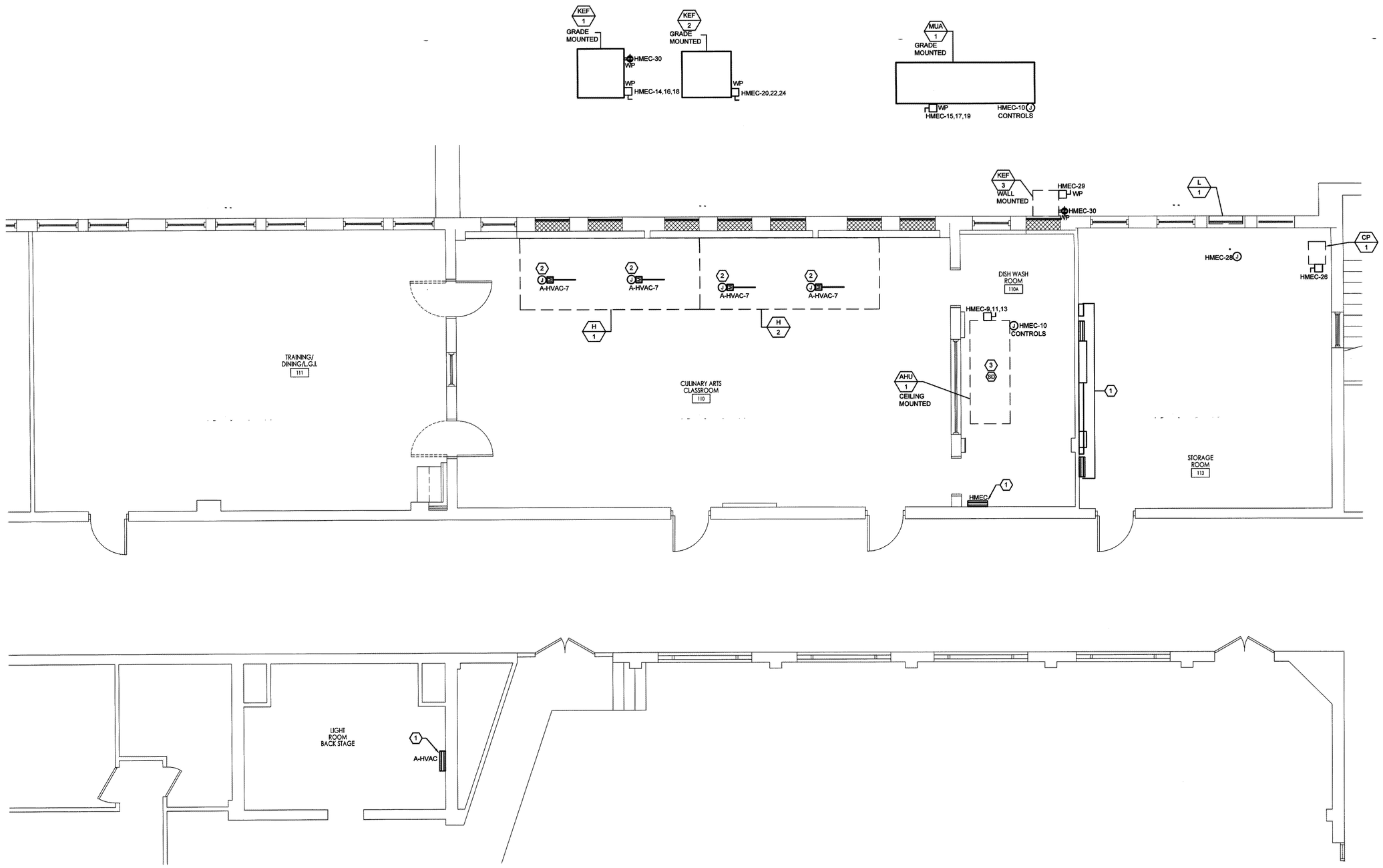

NEW WORK PLAN - HVAC POWER

SCALE: 1/4" = 1'-0"

HVAC POWER NEW WORK KEY NOTES

1. EXISTING ELECTRICAL PANELS TO REMAIN.
2. MOTORIZED DAMPERS MOUNTED ABOVE CEILING. REFER TO MECHANICAL DRAWINGS FOR ADDITIONAL INFORMATION.
3. NEW FIRE ALARM DEVICE CONNECT TO EXISTING FIRE ALARM SYSTEM. PROVIDE TESTING AND PROGRAMING.

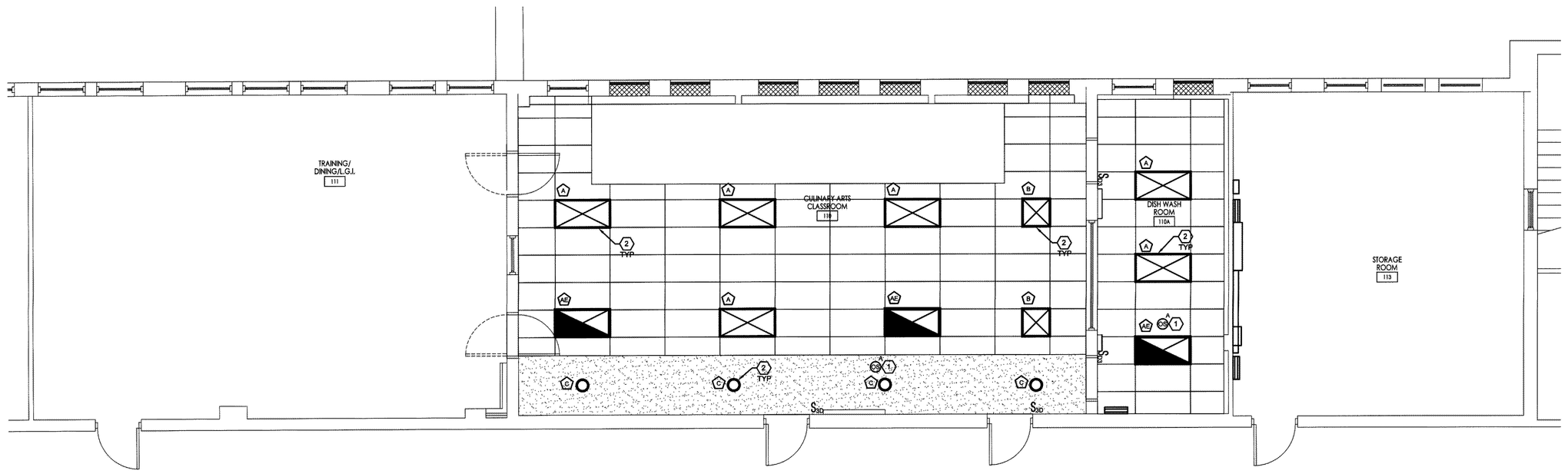

NEW WORK PLAN - LIGHTING

SCALE: 1/4" = 1'-0"

LIGHTING NEW WORK KEY NOTES

1. PROVIDE CEILING MOUNTED OCCUPANCY SENSOR FOR CONTROL OF LIGHT FIXTURES. SENSOR SWITCH, ACUITY CONTROLS - CMR PDT 10 - PP20 OR APPROVED EQUAL. CONTRACTOR SHALL EXTEND EXISTING BRANCH CIRCUIT TO THIS LOCATION. (TYPICAL)
2. NEW LIGHTING FIXTURES: CONTRACTOR SHALL EXTEND EXISTING BRANCH CIRCUIT TO THIS LOCATION. (TYPICAL)

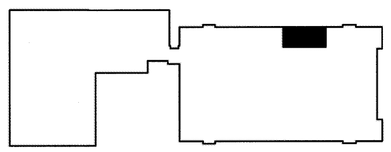

KEY PLAN

SCALE: NONE

FRENCH & PARRELLO ASSOCIATES

Corporate Office
1800 Route 34, Suite 101
Wall, NJ 07719
732.312.9800
Regional Offices
Hackettstown, NJ
New York, NY

AMIN H. GOMAA, PE
PROFESSIONAL ENGINEER, NJ LIC. No. 24GE04842100

JOHN J. VEISZ, AIA, CSBA
NJ - 21AX00866000 | PA - RA010819
WILLIAM D. HOPKINS III, AIA, LEED AP
NJ - 21AX01706000 | PA - RA012520X
GEORGE R. DUTHIE JR., AIA, PP
NJ - 21AX01299200
Architect
Date 12/20/19

FVHD architects planners
Fraytak Veisz Hopkins Duthie PC
Corporate: 1515 Lower Ferry Road - Trenton - New Jersey 08628
Pennsylvania: 140 Whitaker Ave - Mont Clare - Pennsylvania 19453
FVHDPC.COM

Project Name
Culinary Arts Classroom Renovation at Wildwood Middle/ High School

Project Owner Name
Wildwood School District

Project Location
4300 Pacific Avenue
Wildwood, NJ
08260

Project Number
5059

Project Date
12-20-2019

Checked By
AHG

Drawn By
MJB

Scale
AS SHOWN

Drawing Name
ELECTRICAL NEW WORK PLANS

Revisions

No.	Date	Description

Drawing Number
E3.0