# MOUNT HOLLY FIRE INTERIM BAYS ADDITION

## 250 RANCOCAS ROAD
## MOUNT HOLLY, NJ 08060

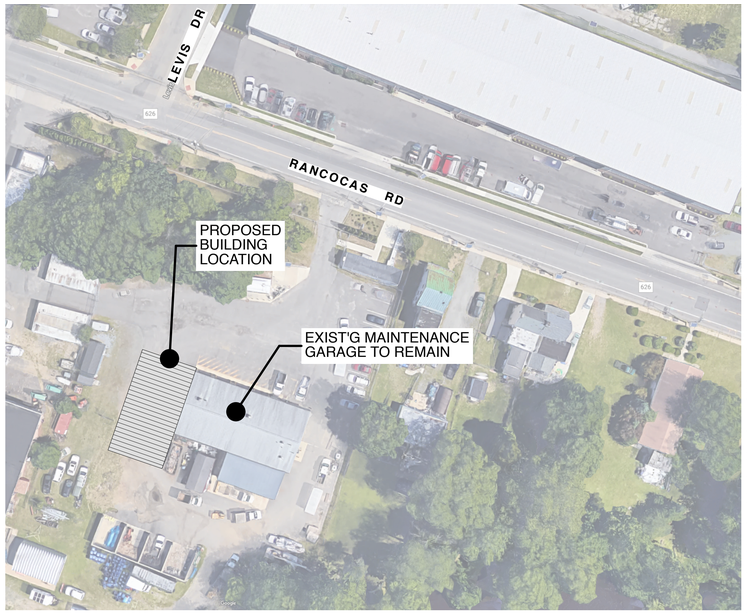


## OWNER:
**MOUNT HOLLY FIRE DISTRICT NO. 1**
17 PINE STREET
MOUNT HOLLY, NJ 08060
609-261-7233

## ARCHITECT:
**REGAN YOUNG ENGLAND BUTERA, PC.**
456 HIGH STREET
MOUNT HOLLY, NJ 08060
609-265-2652, FAX 609-265-0333

## SITE ENGINEER:
**DANTE GUZZI ENGINEERING ASSOCIATES, LLC**
418 STOKES ROAD
MEDFORD, NJ 08055-8406
609-654-4440, FAX 609-654-7792

## STRUCTURAL ENGINEER:
**SE2 ENGINEERING, LLC**
1705 BUTLER PIKE
CONSHOHOCKEN, PA 19428-2236
610-828-1550, FAX 610-828-5080

## MPE ENGINEER:
**KELTER & GILLIGO CONSULTING ENGINEERS**
14 WASHINGTON STREET, SUITE 221
PRINCETON JUNCTION, NJ 08550-1028
609-799-8336, FAX 609-275-9306

## CONSTRUCTION MANAGER:
**GREYHAWK CONSTRUCTION MANAGERS + CONSULTANTS**
2000 MIDLANTIC DRIVE, SUITE 210
MOUNT LAUREL, NJ 08054
856-722-1800

MTHFIR Interim Bays *Addition*
**Building Code Synopsis**

**0100.0 Administration**
(Not Applicable)

**0200.0 NJUCC Excerpts**

**5:23-2.1(c)** *New Jersey Uniform Construction Code* (*NJUCC*) shall control all matters concerning construction, alteration, addition, repair, removal, demolition, use, location, and occupancy of all buildings and structures and their service equipment, and shall apply to existing or proposed buildings and structures in the State of New Jersey.

**5:23-2.5** As the building is being increased in floor area, the increased portion of the structure shall conform to the *NJUCC* requirements applicable to new construction, while any related work within the existing structure shall conform with the *NJUCC 5:23-6, Rehabilitation Subcode*.

**5:23-2.15** Application for a Construction Permit shall be submitted by the Contractor(s) per *NJUCC* Section 5:23-2.15.

**5:23-2.16(b)** A true copy of the construction permit shall be kept on the site of operations open to inspection during the entire time of prosecution of the Work and until the completion of the same.

**5:23-2.16(i)** At least 24 hours notice of start of work under a construction permit shall be given to the Construction Official.

**5:23-2.16(j)** The issuance of the construction permit shall be conditioned upon payment of appropriate fees, the Contractor's & Owner's assurance that the Work will conform to the requirements of the Code applicable to the Work for which the permit has been issued, including prior approvals and any approved amendments thereto, that the permit is a license to proceed with the Work and shall not be construed as authority to violate, cancel, or set aside any of the provisions of the regulations, that the Owner & Contractor will assist the Enforcing Agency in its inspection work, and that all escrows required to by paid by the applicant in connection with the Work have been paid.

**5:23-2.18(b)** The Construction Official and appropriate Subcode Officials shall carry out periodic inspections during the progress of the Work to ensure that Work inspected conforms to the requirements of the Code.

**5:23-2.18(b)2** Inspections for all subcodes of construction shall be limited to those required for one- and two-family dwellings plus the following: fire suppression systems; heat producing devices; and any special inspections required by any subcode of the regulations. The mid-point inspection shall include a review for compliance with *IBC/NJ* Chapter 11.

**5:23-2.18(c)1** The Contractor shall notify the enforcing agency when the Work is ready for any required inspection specified by the NJUCC or required by the Construction Official or appropriate Subcode Official. This notice shall be given at least 24 hours prior to the time the inspection is desired. This notice shall represent an attestation on the part of the Contractor that the Work has been completed in conformance with the *NJUCC* and is ready for inspection.

**5:23-2.18(c)2** The Contractor shall allow for Inspections to be performed within three business days of the time for which they are requested. The Work shall not proceed in a manner that will preclude the inspection until it has been made.

**5:23-2.18(d)** Upon completion of the Work, and before the issuance of a Certificate of Use and Occupancy required by the *NJUCC*, a final inspection shall be made, and any violations of the code shall be noted and the holder of the permit shall be notified of any discrepancies by the Construction Official.

**5:23-2.21(c)4** The Contractor shall perform the necessary services and be present on the construction site on a regular and periodic basis to determine that the Work is proceeding in accordance with the *NJUCC* and any conditions of the construction permit.

**5:23-2.21(d)** At the completion of the construction, the Contractor shall submit to the Construction Official a report as to the satisfactory completion and the readiness of the project for occupancy and shall certify that, to the best of his/her knowledge and belief, such has been done substantially in accordance with the *NJUCC* and with the plans and specifications, with any substantial deviations noted.

**5:23-2.21(e)** The actual construction of the Work shall be the responsibility of the Contractor(s) as identified on the approved construction permit, and shall involve execution of the Work in accordance with the regulations, execution & control of all methods of construction in a safe & satisfactory manner, and execution all Work in accordance with the *NJUCC* and those portions of the plans and specifications controlled by the *NJUCC*. The Contractor(s) shall render all such construction services as required to effect a safe & satisfactory installation of the project.

**5:23-2.21(e)5** Upon completion of the construction, the Contractor(s) shall certify to the best of their knowledge & belief that such has been done substantially in accordance with the *NJUCC* and with those portions of the plans & specifications controlled by the *NJUCC*, with any substantially deviations specifically noted.

**5:23-2.23(d)** No Addition which increases the height or area of an existing building or structure shall be used until a Certificate of Occupancy shall have been issued by the Construction Official certifying that the Work has been completed in accordance with the provisions of the *NJUCC*, except as otherwise provided in their rules.

**5:23-2.29(a)** The Owner of any premises upon which a building or structure is to be constructed shall be deemed to have consented to inspection, by the Enforcing Agency, of the entire premises and of any and all construction being performed on it until a Certificate of Occupancy has been issued.

**5:23-3.5(a)** Every building and structure and part thereof designed for business, factory, and industrial, high hazard, mercantile, or storage use (Use Groups B, F, H, M, & S) as defined by the *IBC/NJ* shall be posted on all floors by the Owner with a suitably designed placard in a form designated by the Building Subcode official, which shall be securely fastened to the structure in a readily visible place, stating the Use Group, and the maximum allowable Live Load & Occupancy Load.

**5:23-3.5(c)** All posting signs shall be furnished by the Owner and shall be of permanent design; they shall not be removed, or defaced and, if lost, removed or defaced, shall be immediately replaced.

**5:23-3.14(a)1** The Building subcode for new construction is the *International Building Code/2018, New Jersey Edition (IBC/NJ)*, as adopted by *NJUCC*.

**5:23-3.15(a)1** The Plumbing subcode for new construction is the *National Standard Plumbing Code/2018* (*NPC*), as adopted by *NJUCC*.

**5:23-3.16(a)1** The Electrical subcode for new construction is the *National Electrical Code/2017* (*NEC*), as adopted by *NJUCC*.

**5:23-3.17(a)1** The Fire Protection Subcode shall be those portions of subcodes as adopted by *NJUCC* 5:23-3.17.

**5:23-3.18(a)1** The Energy subcode for new construction is ASHRAE Standard 90.1 (*ASHRAE*), as adopted by *NJUCC*.

**5:23-3.20(a)1** The Mechanical subcode for new construction is the *International Mechanical Code/2018 (IMC)*, as adopted by *NJUCC*.

**5:23-3.22(a)1** The Fuel Gas subcode for new construction is the *International Fuel Gas Code/2018 (IFGC)*, as adopted by *NJUCC*.

**0300.0 Use & Occupancy Classification**

**0302.1** The following Use Classifications apply to this project:

**0311.2** The original construction documents for the Public Works Garage stated the building shall be classified per the *IBC/NJ* as Use Group S-1, Moderate-Hazard Storage.

**0307.1** The building Owner and Tenant affirm they shall not manufacture, process, generate, or store materials that constitute a physical or health hazard in quantities in excess of those allowed in *IBC/NJ* Tables 307.1(1) and 307.1(2).

**0400.0 Special Detailed Requirements Based on Use & Occupancy**

**0406.2.1** Automatic garage door openers shall be listed and labeled in accordance with UL 325.

**0406.2.4** Motor-Vehicle Occupancies floor surfaces shall be of concrete or similar approved noncombustible and nonabsorbent materials. The area of floor used for the parking of automobiles or other vehicles shall be sloped to facilitate the movement of liquids to a drain or toward the main vehicle entry doorway.

**0406.2.9.** Equipment and appliances having an ignition source and located in motor-vehicle occupancies shall be elevated such that the source of ignition is not less than 18" above the floor surface on which the equipment or appliance rests. Rooms or spaces that communicate directly with the motor-vehicle occupancy through openings shall be considered part of the motor-vehicle occupancy.

**0500.0 General Building Heights & Areas**

**Table 504.3** Allowable Building Height in Feet above Grade Plane -
• Use Group S-1, Construction Type V-B, Unsprinklered = 60'

! Proposed Building Height
21'-6"

**Table 504.4** Allowable Number of Stories above Grade Plane -
• Use Group S-1, Construction Type V-B, Unsprinklered = 1

! Proposed Stories above Grade Plane
1

**Table 504.6.2** Allowable Area Factor -
• Use Group S-1, Construction Type V-B, Unsprinklered = 9,000

! Proposed Areas

| | |
|---|---|
| Existing Public Works Garage | 4,648 SF |
| Existing Canopy | 1,194 SF |
| Interim Bays Addition | 3,154 SF |
| Subtotal | 8,996 SF |
| ! Proposed Volume of Addition | 67,811 CF |

**0600.0 Types of Construction**

**0602.3** Proposed construction system for the Addition is classified as Type V-B, in which the structural elements, exterior walls, and interior walls are of any materials permitted by the *IBC/NJ*.

**Table 0601**, Fire-Resistance Rating Requirements for Building Elements (hours)

| | |
|---|---|
| • Primary Structural frame | 0 |
| • Exterior Bearing walls | 0 |
| • Interior Bearing walls | 0 |
| • Nonbearing walls | 0 |
| • Floor construction | 0 |
| • Roof construction | 0 |

**0800.0 Interior Finishes**

**0803.1.2** Interior Wall and Ceiling Finishes shall be classified in accordance with ASTM E 84 or UL 723. Such interior finish materials shall be grouped in the following classes in accordance with their flame spread and smoke-developed index.

• Class A: flame spread 0-25; smoke developed 0-450
• Class B: flame spread 26-75; smoke developed 0-450
• Class C: flame spread 76-200; smoke developed 0-450

***IBC/NJ* Table 0803.11** - Interior Wall & Ceiling Finish Requirements by Occupancy [in unsprinklered building]:
• Use Group S, Rooms & Enclosed Spaces C

**0804.1** Interior floor finish and floor covering materials shall comply with *IBC/NJ* Sections 804.2 thru 804.4.2, except for floor finishes and coverings of a traditional type, such as wood, vinyl, linoleum, or terrazzo, and resilient floor covering materials that are not comprised of fibers.

**0900.0 Fire Protection Systems**

**0906.1** Portable fire extinguishers shall be provided in occupancies and locations as required by *IBC/NJ* Section 906.

**0915.1** Carbon monoxide detection shall be installed in new buildings in accordance with *IBC/NJ* Sections 915.1.1 through 915.6.

**1000.0 Means of Egress**

**Table 1004.1.2** - Maximum Floor Area Allowances per Occupant:
• Storage, Parking Garages 200 SF (gross)/Occupant

! Proposed Egress Occupancy
• S-2, Storage, Addition 3,146 SF ÷ 200 SF/Occupant = 16 Occupants

**1005.3.2** The capacity, in inches, of Means of Egress components other than Stairways shall be calculated by multiplying the Occupant Load served by each such component by a Means of Egress capacity factor of 0.2" per Occupant.
• 16 Occupants x 0.2 3.2"

**Table 1006.2.1** Spaces with One Exit, S Use Group
Maximum Occupant Load 29
Maximum Common Path of Egress Travel Distance w/o Sprinkler System 100'

**1008.2** The Means of Egress serving a room or space shall be illuminated at all times that the room or space is occupied.

**1008.2.1** The Means of Egress illumination level shall not be less than 1 foot-candle at the walking surface.

**1008.3.2** In the event of power supply failure in buildings that require two or more Means of Egress, an emergency electrical system shall automatically illuminate interior exit access stairways & ramps, interior & exterior exit stairways & ramps, exit passageways, vestibules on the level of discharge, and exterior landings for exit doorways that lead directly to the exit discharge.

**1008.3.4** The emergency power system shall provide power for a duration of not less than 90 minutes and shall consist of storage batteries, unit equipment, or an on-site generator. The installation of the emergency power system shall be in accordance with *IBC/NJ* Section 2702.

**1008.3.5** Emergency lighting facilities shall be arranged to provide initial illumination that is not less than an average of 1 foot-candle and a minimum at any point of 0.1 foot-candle measured along the path of egress at floor level. Illumination levels shall be permitted to decline to 0.6 footcandle average and a minimum at any point of 0.06 foot-candle at the end of the emergency lighting time duration. A maximum-to-minimum illumination uniformity ration of 40-to-1 shall not be exceeded.

**1009.1** Accessible spaces shall be provided with not less than one accessible Means of Egress.

**1009.2** Each required accessible Means of Egress shall be continuous to a public way and shall consist of one or more of the components listed in *IBC/NJ* Section 1009.2

**1010.1.1** The required capacity of each door opening shall be sufficient for the Occupant Load thereof and shall provide a minimum clear width of not less than 32". Clear openings of doorways with swinging doors shall be measured between the face of the door and the stop, with the door open 90 degrees. Where *IBC/NJ* Section 1010 requires a minimum clear width of 32" and a door opening includes two door leaves without a mullion, one leaf shall provide a clear opening width of 32". The maximum width of a swinging door leaf shall be 48" nominal. The height of doors shall not be less than 80".

**1010.1.1.1** There shall not be projections into the required clear width lower than 34" above the floor or ground. Projections into the clear opening width between 34" and 80" above the floor or ground shall not exceed 4". Exception: Door closers & door stops shall be permitted to be 78" minimum above the floor.

**1010.1.2** Egress doors shall be of the pivoted or side-hinged swinging type.

**1010.1.2.1** Pivot or side-hinged swinging doors shall swing in the direction of egress travel where serving a room or area containing an occupant load of 50 or more persons.

**1010.1.3** The force for pushing or pulling open interior swinging egress doors, other than Fire Doors, shall not exceed 5 pounds. These forces do not apply to the force required to retract latch bolts or disengage other devices that hold the door in a closed position. For other swinging doors, as well as sliding & folding doors, the door latch shall release when subjected to a 15-pound force. The door shall be set in motion when subjected to a 30-pound force. The door shall swing to a full-open position when subjected to a 15-pound force. Forces shall be applied to the latch side of the door.

**1010.1.5** There shall be a floor or landing on each side of a door. Such floor or landing shall be at the same elevation on each side of the door. Landings shall be level except for exterior landings, which are permitted to have a slope not to exceed .25" unit vertical in 12 units horizontal (2% slope).

**1010.1.6** Landings shall have a width not less than the width of the stairway or the door, whichever is greater. Doors in the fully open position shall not reduce a required dimension by more than 7". Where a landing serves an Occupant Load of 50 or more, doors in any position shall not reduce the landing to less than on-half its required width. Landings shall have a length measured in the direction of travel of not less than 44".

**1010.1.7** Thresholds at doorways shall not exceed 0.5 inch. Raised thresholds and floor level changes greater than 0.25 at doorways shall be beveled with a slope not greater than one unit vertical in two units horizontal (50% slope).

**1010.1.9** Except as specifically permitted in *IBC/NJ* Section 1010.1.9, egress doors shall be readily openable from the egress side without the use of a key or special knowledge or effort.

**1010.1.9.1** Door handles, pulls, latches, and other operating devices on doors required to be accessible by *IBC/NJ* Chapter 11 shall not require tight grasping, tight pinching, or twisting of the wrist to operate.

**1010.1.9.2** Door handles, pulls, latches, locks, and other operating devices shall be installed 34" minimum and 48" maximum above the finished floor. Locks used only for security purposes and not used for normal operation are permitted at any height.

**1010.1.9.5** Manually operated flush bolts or surface bolts are not permitted. Exceptions: Where a pair of doors serves a Group B, F or S occupancy, manually operated edge- or surface-mounted bolts are permitted on the inactive leaf provided such inactive leaf is not needed to meet egress capacity requirements and the building is equipped throughout with an automatic sprinkler system in accordance with *IBC/NJ* Section 903.3.1.1. The inactive leaf shall not contain doorknobs, panic bars or similar operating hardware.

**1010.1.9.6** The unlatching of any door or leaf shall not require more than one operation.

**1010.1.10.1**. Where panic or fire exit hardware is installed, it shall comply with the following: 1) Panic hardware shall be listed in accordance with UL 305; 2) Fire exit hardware shall be listed in accordance with UL 10C and UL 305; 3) The actuating portion of the releasing device shall extend not less than one-half of the door leaf width; and 4) The maximum unlatching force shall not exceed 15 pounds.

**1013.1** Exits and exit access doors shall be marked by an approved exit sign readily visible from any direction of egress travel. The path of egress travel to exits and within exits shall be marked by readily visible exit signs to clearly indicate the direction of egress travel in cases where the exit or the path of egress travel is not immediately visible to the occupants. Intervening means of egress doors within exits shall be marked by exit signs. Exit sign placement shall be such that no point in an exit access corridor or exit passageway is more than 100 feet or the listed viewing distance for the sign, whichever is less, from the nearest visible exit sign. Exceptions: 1) Exit signs are not required in rooms or areas that require only one exit or exit access; 2) Main exterior exit doors or gates that are obviously and clearly identifiable as exits need not have exit signs where approved by the building official.

**1013.3** Exit signs shall be internally or externally illuminated.

**1013.5** Electrically powered, self-luminous and photoluminescent exit signs shall be listed and labeled in accordance with UL 924 and shall be installed in accordance with the manufacturer's instructions and the *Electrical Subcode* (*NJUCC* 5:23-3.16). Exit signs shall be illuminated at all times.

**1013.6.1** Every exit sign and directional exit sign shall have plainly legible letters not less than 6" high with the principal strokes of the letters not less than ¾" wide. The word "EXIT" shall have letters having a width not less than 2" wide, except the letter "I," and the minimum spacing between letters shall be not less than 3/8". Signs larger than the minimum established in this section shall have letter widths, strokes and spacing in proportion to their height. The word "EXIT" shall be in high contrast with the background and shall be clearly discernible when the Means of Exit sign illumination is or is not energized. If a chevron directional indicator is provided as part of the exit sign, the construction shall be such that the direction of the chevron directional indicator cannot be readily changed.

**1013.6.2** The face of an exit sign illuminated from an external source shall have an intensity of not less than 5 footcandles.

**1013.6.3** Exit signs shall be illuminated at all times. To ensure continued illumination for a duration of not less than 90 minutes in case of primary power loss, the sign illumination means shall be connected to an emergency power system provided from storage batteries, unit equipment or an on-site generator. The installation of the emergency power system shall be in accordance with the *IBC/NJ* Chapter 27.

**1016.2.2** Egress from a room or space shall not pass through adjoining or intervening rooms or areas, except where such adjoining rooms or areas and the area served are accessory to one or the other, are not a Group H occupancy and provide a discernible path of egress travel to an exit.

**1016.2.3** An exit access shall not pass through a room that can be locked to prevent egress.

**1016.2.5** Egress shall not pass through kitchens, storage rooms, closets, or spaces used for similar purpose.

**1017.2** Exit access travel distance shall not exceed the values given in *IBC/NJ* Table 1017.2.

**Table 1017.2** – Exit Access Travel Distance:
• S-1, w/o Sprinkler 200'

**1017.3** Exit access travel distance shall be measured from the most remote point within a story along the natural and unobstructed path of horizontal and vertical egress travel to the entrance to an exit.

**1100.0 Accessibility**

**1104.1** At least one accessible route within the site shall be provided from public transportation stops, accessible parking, accessible passenger loading zones, and public streets or sidewalks to the accessible building entrance served.

**1104.4.2** Small buildings, defined as those with a total gross enclosed floor area of less than 10,000 SF, shall be required to have at least one accessible entrance on the ground (or first) floor and accessible interior building features on all floors. Except as provided in *IBC/NJ* Sections 1104.4.1.1 – 1104.4.1.5, small buildings that are not more than two stories shall not be required to have elevator(s) to provide a vertical accessible route between floors. Small buildings that are three or more stories shall be required to have elevator(s) to provide a vertical accessible route between floors; however in such buildings, floors that are less than 3,000 square feet or floors with only mechanical equipment shall not be required to be served by an elevator.

**1106.1** Accessible parking spaces shall be provided per *IBC/NJ* Section 1106.

**1109.9** Where fixed or built-in storage elements such as cabinets, coat hooks, shelves, medicine cabinets, lockers, closets and drawers are provided in required accessible spaces, at least 5 percent, but not less than one of each type shall be accessible.

**1109.13** Controls, operating mechanisms and hardware intended for operation by the occupant, including switches that control lighting and ventilation and electrical convenience outlets, in accessible spaces, along accessible routes or as parts of accessible elements shall be accessible. Exceptions: 1) Operable parts that are intended for use only by service or maintenance personnel shall not be required to be accessible. 2) Electrical or communication receptacles serving a dedicated use shall not be required to be accessible. 3) Where two or more outlets are provided in a kitchen above a length of countertop that is uninterrupted by a sink or appliance, one outlet shall not be required to be accessible. 4) Floor electrical receptacles shall not be required to be accessible. 5) HVAC diffusers shall not be required to be accessible. 6) Except for light switches, where redundant controls are provided for a single element, one control in each space shall not be required to be accessible.

**1111.1** Assessible signage shall be provided per *IBC/NJ* Sections 1111.1, 1111.2 and 111.3

**1300.0 Energy Efficiency**

**5:23-3.18(a)1** The Energy subcode for new construction is ASHRAE.IESNA Standard 90.1 (*ASHRAE*), as adopted by *NJUCC*.

**1400.0 Exterior Walls**

**1402.2** Exterior walls shall provide the building with a weather-resistant exterior wall envelope. The exterior wall envelope shall include flashing, as described in *IBC/NJ* Section 1404.4. The exterior wall envelope shall be designed & constructed in such a manner as to prevent the accumulation of water within the wall assembly by providing a water-resistive barrier behind the exterior veneer, per *IBC/NJ* Section 1403.2 and a means for draining water that enters the assembly to the exterior of the veneer. Protection against condensation in the exterior wall assembly shall be provided in accordance with the *IBC/NJ* Section 1404.3.

**1500.0 Roof Assemblies**

**1507.1** Roof coverings shall be designed, installed, and maintained in accordance with *IBC/NJ* Chapter 15 and the approved manufacturer's installation instructions such that the roof covering shall serve to protect the building.

**1600.0 Structural Design**

**1604.2** Building, structures, and parts thereof shall be designed & constructed to support safely the factored loads in load combinations defined in the *IBC/NJ* without exceeding the appropriate strength limit states for the materials of construction.

**Table 1604.5** – Occupancy Category of Buildings & Other Structures:

! Occupancy Category II

**Table 1607.1** - Minimum Uniform/Concentrated Floor Live Loads:

• Roofs 20 PSF

**1607.7** Floors and other surfaces that are intended to support vehicle loads greater than a 10,000-pound gross vehicle weight rating shall comply with *IBC/NJ* Sections 1607.7.1 thru 1607.7.5

**1603.1.3** The minimum Roof Snow Load is based upon 25 PSF Ground Snow Load [per DCA Bulletin 19-1].

**1603.1.4** The design Basic Wind Speed is 115 mph [per DCA Bulletin 19-1].

**1800.0 Soils & Foundations**

**1808.1** Foundations shall be constructed in accordance with *IBC/NJ* Chapter 18

**1900.0 Concrete**

**1901.2** Structural concrete shall be constructed in accordance with *IBC/NJ* Chapter 19 and ACI 318 as amended in *IBC/NJ* Section 1905.

**2100.0 Masonry**

**2104.2** Masonry construction shall comply with the requirements of *IBC/NJ* Sections 2104.1.1 and 2104.1.2 and with TMS 602/ACI 530.1/ASCE 6.

**Plumbing Systems**

**5:23-3.15(a)1** Plumbing supply, drainage, venting, fixtures, devises, trim, & appliances shall be designed, installed, & tested in accordance with the requirements of the *National Standard Plumbing Code/2018 (NPC)*, as adopted by NJUCC.

**Electrical Systems**

**5:23-3.16(a)1** Electrical Power & Lighting panels, circuiting, grounding, receptacles, fixtures, devises, & appliances shall be designed, installed, & tested in accordance with the requirements of the *National Electrical Code 2017 (NEC)*, as adopted by *NJUCC*.

**Mechanical Systems**

**M07.3** Heating, Ventilation, & Air Conditioning equipment, supply, exhaust, combustion air, & controls shall be designed, installed, & tested in accordance with the requirements of the *IMC* and the manufacturer's instructions and recommendations.

This code analysis is based upon NJAC 5:23, the New Jersey Uniform Construction Code. The most recent Update (Errata 16 December 2019) was received at RYEBREAD Architects on 03 June 2020. This Code adopts and amends the International Building Code 2018 (New Jersey edition).

**COMcheck Software Version COMcheckWeb**
## Envelope Compliance Certificate

**Project Information**

| | |
|---|---|
| Energy Code: | 90.1 (2016) Standard |
| Project Title: | MTHFIR Interim Bays |
| Location: | Mount Holly, New Jersey |
| Climate Zone: | 4a |
| Project Type: | Addition |
| Performance Sim. Specs: | EnergyPlus 8.1.0.009 (EPW: USA_PA_Philadelphia.Intl.AP.724080_TMY3.epw) |

Construction Site:
300 Rancocas Road
Mount Holly, New Jersey 08060

Owner/Agent:
Mount Holly Fire District No. 1
17 Pine Street
Mount Holly, New Jersey 08060
609-261-7233

Designer/Contractor:
RYEBREAD Architects
456 High Street
Mount Holly, New Jersey 08060
609-265-2652

| Building Area | Floor Area |
|---|---|
| 1-Equipment storage building (Warehouse) : Nonresidential | 2953 |

**Envelope Assemblies**

| Assembly | Gross Area or Perimeter | Cavity R-Value | Cont. R-Value | Proposed U-Factor | Budget U-Factor$_{(a)}$ |
|---|---|---|---|---|---|
| Roof: Attic Roof, Wood Joists, [Bldg. Use 1 - Equipment storage building] | 2953 | 38.0 | 0.0 | 0.027 | 0.021 |
| Floor: Unheated Slab-On-Grade, Horizontal with vertical 2 ft., [Bldg. Use 1 - Equipment storage building] (c) | 235 | --- | 10.0 | 0.700 | 0.520 |
| NORTH | | | | | |
| Ext. Wall: Wood-Framed, 16in. o.c., [Bldg. Use 1 - Equipment storage building] | 815 | 0.0 | 10.0 | 0.073 | 0.064 |
| Door: Insulated Metal, Swinging, [Bldg. Use 1 - Equipment storage building] | 21 | --- | --- | 0.450 | 0.370 |
| Door: Other (U-Factor option), Non-Swinging, [Bldg. Use 1 - Equipment storage building] | 196 | --- | --- | 0.098 | 0.310 |
| Door: Other (U-Factor option), Non-Swinging, [Bldg. Use 1 - Equipment storage building] | 196 | --- | --- | 0.098 | 0.310 |
| EAST | | | | | |
| Ext. Wall: Wood-Framed, 16in. o.c., [Bldg. Use 1 - Equipment storage building] | 948 | 0.0 | 10.0 | 0.073 | 0.064 |
| Door: Insulated Metal, Swinging, [Bldg. Use 1 - Equipment storage building] | 21 | --- | --- | 0.450 | 0.370 |
| SOUTH | | | | | |
| Ext. Wall: Wood-Framed, 16in. o.c., [Bldg. Use 1 - Equipment storage building] | 815 | 0.0 | 10.0 | 0.073 | 0.064 |
| Door: Other (U-Factor option), Non-Swinging, [Bldg. Use 1 - Equipment storage building] | 196 | --- | --- | 0.098 | 0.310 |
| Door: Insulated Metal, Swinging, [Bldg. Use 1 - Equipment storage building] | 21 | --- | --- | 0.450 | 0.370 |
| Door: Other (U-Factor option), Non-Swinging, [Bldg. Use 1 - Equipment storage building] | 196 | --- | --- | 0.098 | 0.310 |
| WEST | | | | | |
| Ext. Wall: Wood-Framed, 16in. o.c., [Bldg. Use 1 - Equipment storage building] | 1283 | 0.0 | 10.0 | 0.073 | 0.064 |
| Door: Insulated Metal, Swinging, [Bldg. Use 1 - Equipment storage building] | 21 | --- | --- | 0.450 | 0.370 |

(a) Budget U-factors are used for software baseline calculations ONLY, and are not code requirements.
(b) 'Other' components require supporting documentation for proposed U-factors.
(c) Slab-On-Grade proposed and budget U-factors shown in table are F-factors.

**Envelope PASSES: Design 2% better than code**

Project Title: MTHFIR Interim Bays — Report date: 07/24/20

## DOWNSPOUT & GUTTER SIZING

Rainfall Intensity (in/hr): 9.3
*Based on rainfall averages in Trenton, NEW JERSEY (100 years)*

Roof Rainfall Design Area (ft²): 3,699.33
* Area of Largest Roof Serving a Single Gutter System
*Design Area manually entered by user*

Gutter in Lineal Ft: 82
* Length at Largest Roof Serving a Single Gutter System

Gutter Length Serving Single DS (ft.): 21
*Assumption: downspouts are equally spaced
**Maximum gutter length to be served by a downspout is 50ft per SMACNA ASMM

M (depth to width ratio): 0.75

Min. Gutter Width (in.): 6 [Rectangular]

Min. Gutter Depth (in.): 4.5

# of Downspouts: 4

Additional Downspouts: 2
*to reduce size of gutter and downspouts additional downspouts can be added

Min. Area per DS (in²): 7.11

Min. DS Size (in): 3.00 x 4.00 [Plain Rectangular]
*Per Table 1-3 on page 1-4 of SMACNA ASMM

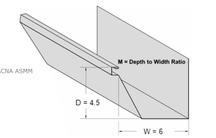


Calculations are derived using the 7th Edition of SMACNA's Architectural Sheet Metal Manual

## LIST OF DRAWINGS:
All Contractors shall examine all drawings indicated herein for required coordination between different trades and/or for work included in other sections of the Project Manual that may pertain to their respective contract.



PRINT DATE: 9/1/20

REGAN YOUNG, AIA
21A00912100


REGAN YOUNG ENGLAND BUTERA
REFERENDUMS · ENGINEERING · ARCHITECTURE · DESIGN
456 HIGH STREET • MT. HOLLY, NEW JERSEY 08060 USA
+1(609)265-2652/-0333FAX • 21A00912100 • RYEBREAD.COM


MT HOLLY FIRE INTERIM BAYS
250 RANCOCAS MT HOLLY ROAD
MOUNT HOLLY, NEW JERSEY

TITLE: COVER SHEET

DRAWING DATE: 01 JULY 2020
REVISION DATE:

DRAWN BY: PF
COMMISSION NO.: 5475C

IBCS

1 OF 1

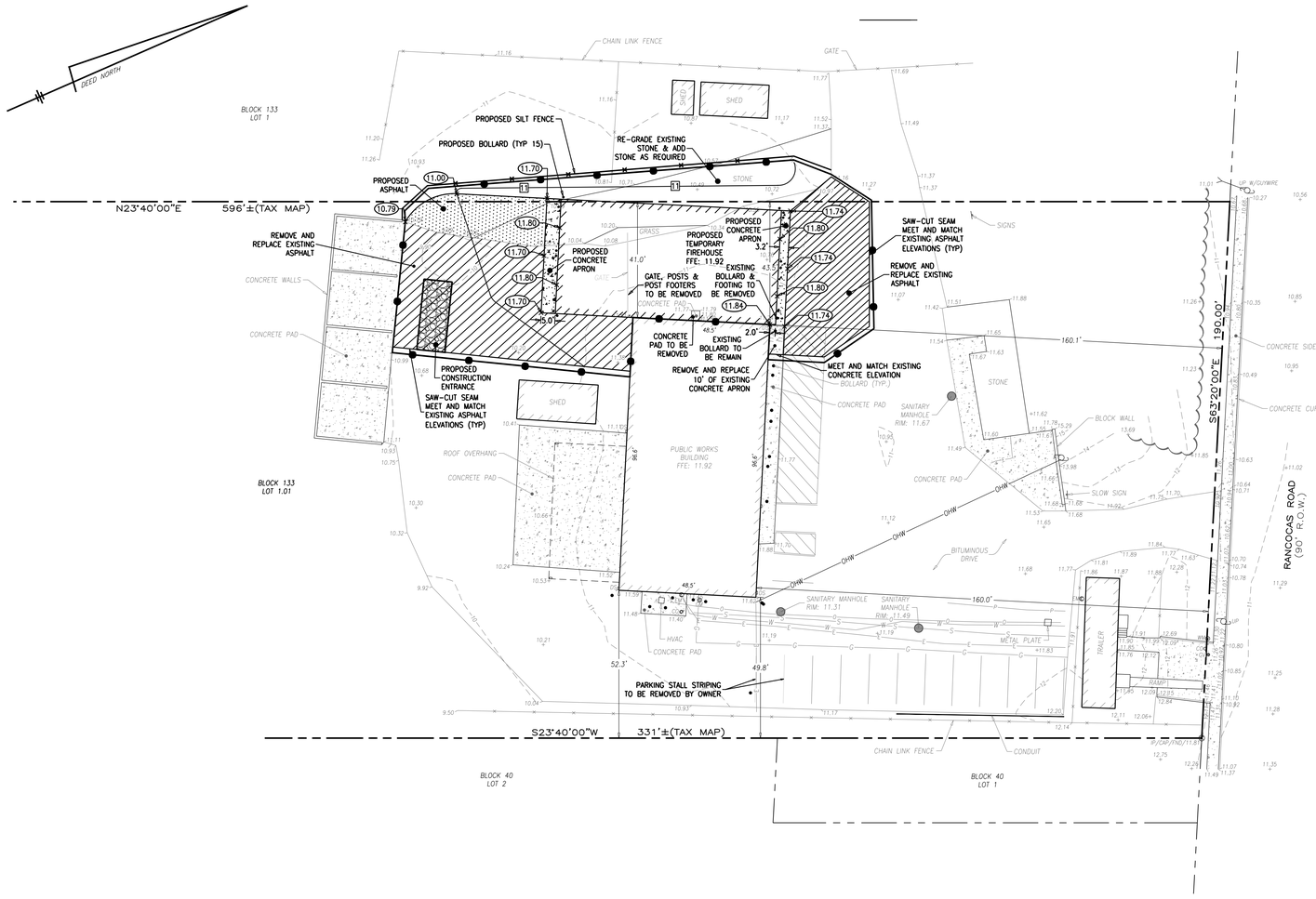


## SITE PLAN

SCALE : 1"=20'

## LIMIT OF DISTURBANCE = 0.2357 ACRES

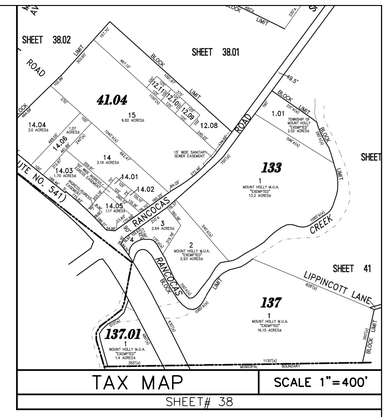


## SITE PLAN – CONSTRUCTION NOTES

1) SITE CONSTRUCTION TO BE IN ACCORDANCE WITH NEW JERSEY STATE DEPARTMENT OF TRANSPORTATION STANDARDS FOR ROAD AND BRIDGE CONSTRUCTION, 2007 (LATEST ADDENDUM). CONTRACTOR SHALL VERIFY THE LOCATION OF ANY UNDERGROUND ELECTRICAL CONDUIT AND IDENTIFY SAME PRIOR TO STARTING ANY EXCAVATION. THE CONTRACTOR SHALL OBTAIN ALL NECESSARY PERMITS FROM THE TOWNSHIP, COUNTY, AND STATE AND SHALL PAY ALL FEES WHICH SHALL BE REIMBURSED BY OWNER WITHOUT MARKUP, INCLUDING THE INSPECTION FEES, AND IN GENERAL SHALL PROCURE ALL REQUIRED PERMITS, LICENSES, INSPECTIONS, PAY ALL CHARGES AND FEES, AND GIVE NOTICES NECESSARY FOR AND INCIDENTAL TO THE DUE AND LAWFUL PROSECUTION OF THE PROJECT. THE CONTRACTOR SHALL BE RESPONSIBLE FOR RESTORING THE PAVING, TOPSOIL, FERTILIZING AND SEEDING ALL AREAS DISTURBED BY HIS ACTIVITIES. INSPECTION OF, OR FAILURE TO INSPECT ANY MATERIALS OR WORKMANSHIP, SHALL IN NO WAY RELIEVE THE CONTRACTOR OF HIS RESPONSIBILITY TO PERFORM THE WORK IN ACCORDANCE WITH APPLICABLE PLANS, SPECIFICATIONS, AND LAW.
2) THE CONTRACTOR WILL PRESERVE AND PROTECT ALL EXISTING VEGETATION, SUCH AS TREES, SHRUBS, AND GRASS ON OR ADJACENT TO THE SITE, WHICH DO NOT REASONABLY INTERFERE WITH THE CONSTRUCTION AS MAY BE DETERMINED BY THE DESIGN ENGINEER. THE CONTRACTOR SHALL BE RESPONSIBLE FOR UNAUTHORIZED CUTTING OR DAMAGING OF TREES AND SHRUBS, MATERIALS, OR TRACKING OF GRASS AREAS BY EQUIPMENT. CARE SHALL BE TAKEN BY THE CONTRACTOR IN FELLING TREES AUTHORIZED FOR REMOVAL TO AVOID ANY UNNECESSARY DAMAGE TO VEGETATION THAT IS TO REMAIN IN PLACE. THE CONTRACTOR SHALL BE LIABLE FOR OR MAY BE REQUIRED TO REPLACE OR RESTORE, AT HIS EXPENSE, ALL VEGETATION NOT PROTECTED AND PRESERVED AS REQUIRED HEREIN THAT MAY BE DESTROYED OR DAMAGED.
3) THE CONTRACTOR SHALL ACKNOWLEDGE PRIOR TO CONSTRUCTION THAT HE HAS SATISFIED HIMSELF AS TO THE NATURE AND LOCATION OF THE WORK, THE GENERAL AND LOCAL CONDITIONS, PARTICULARLY THOSE BEARING ON TRANSPORTATION, HANDLING AND STORAGE OF MATERIALS, THE CHARACTER OF THE EQUIPMENT AND FACILITIES NEEDED DURING THE PROSECUTION OF THE WORK AND ALL OTHER MATTERS WHICH CAN IN ANY WAY AFFECT THE WORK OR THE COST THEREOF UNDER THIS CONTRACT. ANY FAILURE OF THE CONTRACTOR TO ACQUAINT HIMSELF WITH THE AVAILABLE INFORMATION CONCERNING THOSE CONDITIONS WILL NOT RELIEVE HIM FROM RESPONSIBILITY FOR ESTIMATING PROPERLY THE DIFFICULTIES OR COST OF SUCCESSFULLY PERFORMING THE WORK.
4) ALL MATERIALS, METHODS, AND DETAILS OF IMPROVEMENT CONSTRUCTION SHALL CONFORM TO THE REGULATIONS OF MOUNT HOLLY TOWNSHIP, BURLINGTON COUNTY, AND/OR THE APPROPRIATE UTILITY COMPANY, WHICHEVER REGULATION TAKES PRECEDENCE.
5) ALL CONCRETE FOR SIDEWALKS AND CURB SHALL BE OF A MIX TO ENSURE A 28 DAY STRENGTH OF 4,000 PSI AND HAVE A MINIMUM AIR CONTENT OF 5%.
6) THE CONTRACTOR SHALL BE COMPLETELY RESPONSIBLE FOR ENSURING THAT ALL WORK PERFORMED CONFORMS TO ALL THE APPLICABLE STATUTES, REGULATIONS, ORDINANCES, AND STANDARDS OF GOVERNMENTAL BODIES HAVING JURISDICTION OVER SUCH WORK. THE RESPONSIBILITY SHALL INCLUDE, BUT NOT BE LIMITED TO, THE FOLLOWING:
   A. CONFORMITY WITH THE APPROVED PLANS AS WELL AS STANDARDS AND SPECIFICATIONS OF THE TOWNSHIP.
   B. CORRECTION OF ALL DEFECTS OF THE WORK, NO MATTER WHAT THE CAUSE, UNTIL THE DATE OF THE ACCEPTANCE, AND THEREAFTER, FOR THE PERIOD OF ANY GUARANTEE WHICH RUNS BEYOND THE DATE OF ACCEPTANCE.
   C. SOLUTION OF ANY PROBLEM, UNFORESEEN AT THE TIME OF THE APPROVAL OF THE PLAN, WHICH MAY OR DO IMPAIR THE INTEGRITY OF ANY IMPROVEMENTS, INCLUDING PROBLEMS SUCH AS HIGH GROUND WATER, UNSTABLE SOIL, ETC.
7) CONTRACTOR SHALL BE RESPONSIBLE FOR MAINTAINING PUBLIC SAFETY AND SECURING THE SITE AT ALL TIMES.
8) CONTRACTOR SHALL BE RESPONSIBLE FOR KEEPING ALL PUBLIC RIGHTS OF WAY AND ADJACENT PROPERTIES CLEAN AND SAFE FROM EXCESSIVE DUST AND DEBRIS RESULTING FROM DEMOLITION AND/OR CONSTRUCTION.
9) THE LOCATION OF ANY UTILITIES SHOWN ON THE PLANS ARE ONLY APPROXIMATE. THE CONTRACTOR SHALL EXERCISE EXTREME CAUTION PRIOR TO BEGINNING EXCAVATION OR COMMENCING CONSTRUCTION AND SHALL BE FULLY RESPONSIBLE FOR LOCATING ALL UNDERGROUND UTILITIES IN THE VICINITY OF THE PROJECT. GARDEN STATE UNDERGROUND PLANT LOCATION SERVICE WILL PROVIDE FOR ON-SITE DELINEATION OF EXISTING UTILITIES UPON REQUEST (1-800-272-1000).
10) EXISTING MATERIALS DESIGNATED FOR REMOVAL SHALL BE REMOVED BY THE CONTRACTOR UNLESS OTHERWISE DIRECTED BY THE OWNER.
11) EXISTING PAVEMENT DESIGNATED FOR REMOVAL SHALL BE MILLED OUT 5" BELOW THE SURFACE.
12) EXISTING DEPRESSED CURBS AT DRIVEWAY APRONS SHALL HAVE NO MORE THAN 1-1/2 INCH REVEAL AFTER PAVING.
13) EXISTING CURBS SHALL BE LEFT WITH A 4 INCH TO 8 INCH (+/- 1/2 INCH) REVEAL UNLESS OTHERWISE DIRECTED BY THE OWNER.
14) MINIMUM GUTTER SLOPE – 0.50 % UNLESS OTHERWISE NOTED.
15) DISTURBED AREAS SHALL BE RESTORED AS SOON AS PRACTICAL.
16) THE CONTRACTOR SHALL NOTIFY THE ENGINEER IMMEDIATELY IF THERE ARE ANY DISCREPANCIES FOUND BETWEEN THE DRAWINGS AND SPECIFICATIONS AND THE SITE CONDITIONS. THE CONTRACTOR SHALL PROCEED AT HIS OWN RISK PRIOR TO THE RESOLUTION IF ANY DISCREPANCIES.

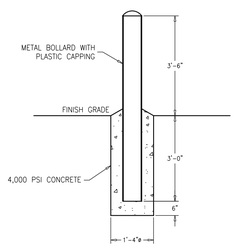


DETAIL 1 BOLLARD
N.T.S.

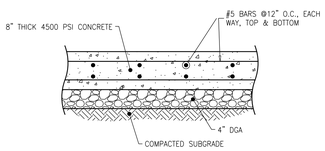


DETAIL 2 CONCRETE BAY APRON
N.T.S.

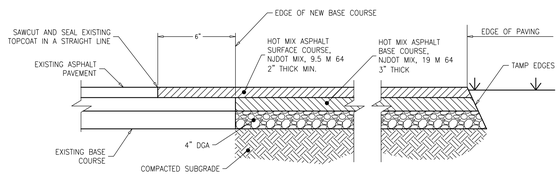


DETAIL 3 TYPICAL ASPHALT PAVEMENT CROSS SECTION AND SEAM
N.T.S.

## LEGEND

| | |
|---|---|
| | EXISTING SIGN |
| | EXISTING UTILITY POLE |
| 43.02 | EXISTING SPOT ELEVATION |
| GM | EXISTING GAS METER |
| WM | EXISTING WATER METER |
| EM | EXISTING ELECTRIC METER |
| GV | EXISTING GAS VALVE |
| CO | EXISTING CLEANOUT |
| DS | EXISTING DWONSPOUT |
| | EXISTING MANHOLE |
| | EXISTING CURBING |
| | PROPOSED CURBING |
| -W-W-W- | WATER MARKOUT |
| -S-S-S- | SANITARY MARKOUT |
| -G-G-G- | GAS MARKOUT |
| -E-E-E- | ELECTRIC MARKOUT |
| -O-O-O- | ORANGE MARKOUT |
| -P-P-P- | PINK MARKOUT |
| -OHW- | EXISTING OVERHEAD WIRES |
| 45.35 | PROPOSED PAVEMENT ELEVATIONS |
| T45.75 / 45.25 | PROPOSED TOP OF CURB ELEVATION (T) AND GUTTER ELEVATION |
| | EXISTING CONCRETE |
| | PROPOSED CONCRETE |
| -50- | EXISTING CONTOUR |
| 50 | PROPOSED CONTOUR |

NOTES:
1. OUTBOUND INFORMATION BASED ON DEED BOOK 6219 PAGE 467.
2. ELEVATIONS SHOWN ARE BASED ON NAVD 88 DATUM.
3. LOT AND BLOCK NUMBERS REFER TO MOUNT HOLLY TOWNSHIP TAX MAPS, SHEET #38.
4. PROPERTY LIES IN ZONE "X" AS SHOWN ON F.I.R.M. #34005C0256F, DATED 12/21/2017.

UTILITY MARKOUT REQUIRED: CONTRACTOR IS RESPONSIBLE TO CALL NEW JERSEY ONE CALL (800-272-1000) FOR UTILITY MARK-OUT 3 FULL BUSINESS DAYS PRIOR TO COMMENCEMENT OF EXCAVATION.

GRAPHIC SCALE
20 0 10 20 40 80
( IN FEET )
1 inch = 20 ft.

| NO. | DATE | APPR. | REVISION |
|---|---|---|---|


Dante Guzzi Engineering Associates
203 South Main Street, Cape May Court House, New Jersey 08210
telephone (609) 465-3333 N.J. Certificate of Authorization No. 24GA27967500
facsimile (609) 465-3357 www.guzziengineering.com
DANTE GUZZI, P.E.
PROFESSIONAL ENGINEER N.J. LICENSE NO. 36455


8/25/2020
DATE

SITE PLAN
250 RANCOCAS ROAD
BLOCK 133 LOT 1.01
TOWNSHIP OF MOUNT HOLLY
BURLINGTON COUNTY, NEW JERSEY

| FILE | DATE | DRAWN BY | DRAWING NO. |
|---|---|---|---|
| 250RANCOCAS-SITE | 08/25/2020 | JG | C1 |
| SCALE: AS SHOWN | PROJECT NO.: P-20-125 | CHECKED BY: DG / DATE: 08/25/2020 | SHEET 1 OF 2 |

REV. NO.

# SOIL EROSION AND SEDIMENT CONTROL REQUIREMENTS

## GENERAL REQUIREMENTS:

1. THE SOIL CONSERVATION DISTRICT SHALL BE NOTIFIED SEVENTY-TWO (72) HOURS PRIOR TO ANY LAND DISTURBANCE.
2. A CERTIFIED COPY OF THIS SOIL EROSION AND SEDIMENT CONTROL PLAN MUST BE MAINTAINED ON THE PROJECT SITE DURING CONSTRUCTION.
3. SOIL EROSION AND SEDIMENT CONTROL PRACTICES IN THIS PLAN SHALL BE CONSTRUCTED IN ACCORDANCE WITH THE CURRENT STANDARDS FOR SOIL EROSION AND SEDIMENT CONTROL IN NEW JERSEY.
4. ANY CHANGES TO THE SITE PLAN WILL REQUIRE THE SUBMISSION AND RECERTIFICATION OF A REVISED SOIL EROSION AND SEDIMENT CONTROL PLAN TO THE SOIL CONSERVATION DISTRICT. THE REVISED PLAN MUST BE IN ACCORDANCE WITH THE CURRENT NEW JERSEY STANDARDS FOR SOIL EROSION AND SEDIMENT CONTROL.
5. NJSA 4: 24-39, et seq., REQUIRES THAT UPON PERMANENT STABILIZATION AND COMPLETION OF CONSTRUCTION, THE CONTRACTOR SHALL APPLY TO THE SOIL CONSERVATION DISTRICT FOR A FINAL COMPLIANCE INSPECTION TO CHECK THAT ALL THE PROVISIONS OF THE CERTIFIED SOIL EROSION AND SEDIMENT CONTROL PLAN HAVE BEEN COMPLIED WITH FOR PERMANENT MEASURES.
6. NJSA 4: 24-39, et seq., REQUIRES THAT NO CERTIFICATE OF OCCUPANCY BE ISSUED BEFORE ALL THE PROVISIONS OF THE CERTIFIED SOIL EROSION AND SEDIMENT CONTROL PLAN HAVE BEEN COMPLIED WITH FOR PERMANENT MEASURES. ALL SITE WORK FOR THE PROJECT MUST BE COMPLETED PRIOR TO THE DISTRICT ISSUING THE REPORT OF COMPLIANCE AS A PREREQUISITE TO THE ISSUANCE OF A CERTIFICATE OF OCCUPANCY BY THE MUNICIPALITY.
7. COMPLIANCE WITH THE CERTIFIED PLAN SHALL BE THE RESPONSIBILITY OF THE CONTRACTOR DURING AND IMMEDIATELY FOLLOWING THE CONSTRUCTION PHASE. UNLESS OTHERWISE SET FORTH BY CONTRACTUAL PROVISIONS, UPON ACCEPTANCE OF THE PROJECT BY THE OWNER THE RESPONSIBILITY SHALL TRANSFER TO THE OWNER.
8. ANY CONVEYANCE OF THIS PROJECT PRIOR TO ITS COMPLETION WILL TRANSFER FULL RESPONSIBILITY FOR COMPLIANCE WITH THE CERTIFIED PLAN TO ANY SUBSEQUENT OWNERS.

## GENERAL PROCEDURES:

1. THE CONTRACTOR SHALL COORDINATE ALL SOIL SEDIMENT RELATED MATTERS WITH THE SOIL CONSERVATION DISTRICT.
2. ALL APPLICABLE SOIL EROSION AND SEDIMENT CONTROL PRACTICES SHALL BE IN PLACE PRIOR TO ANY GRADING OPERATIONS AND/OR INSTALLATION OF PROPOSED STRUCTURES OR UTILITIES.
3. ALL APPLICABLE SOIL EROSION AND SEDIMENT CONTROL PRACTICES SHALL BE LEFT IN PLACE UNTIL CONSTRUCTION IS COMPLETE AND/OR THE AREA IS STABILIZED.
4. ADDITIONAL SOIL EROSION AND SEDIMENT CONTROL MEASURES SHALL BE PROVIDED WHEN AND WHERE DIRECTED BY THE SOIL CONSERVATION DISTRICT. THIS MAY INCLUDE AREAS OF OFFSITE SOIL DISTURBANCE.
5. THE SITE SHALL BE GRADED AND MAINTAINED AT ALL TIMES SUCH THAT ALL STORMWATER RUNOFF IS DIVERTED TO SOIL EROSION AND SEDIMENT CONTROL FACILITIES.
6. ALL SEDIMENTATION FACILITIES SHALL BE INSPECTED AND MAINTAINED ON A REGULAR BASIS AND AFTER EVERY STORM EVENT.
7. EXISTING STORMWATER INLETS SHALL BE PROTECTED WITH SILT SACK FILTERS. ALL NEW INLETS, OUTLETS, DITCHES, ETC., SHALL BE PROTECTED BY APPROVED MEASURES BEFORE THEY BECOME OPERATIONAL.
8. CONSTRUCTION TRAFFIC SHALL USE THE DESIGNATED INGRESS/EGRESS POINT(S). A STABILIZED CONSTRUCTION ACCESS (CRUSHED STONE TRACKING PAD) SHALL BE INSTALLED AND MAINTAINED WHENEVER CONSTRUCTION TRAFFIC ACCESS PAVED AREAS FROM UNPAVED AREAS. THE ACCESS SHALL BE THE FULL WIDTH OF THE INGRESS/EGRESS AND BE A MINIMUM LENGTH AS SPECIFIED ON THE PLANS. THE STONE MUST BE ANGULAR, 1.5" – 4" IN SIZE, PLACED NOT LESS THAN 12" THICK AND UNDERLAIN WITH A SUITABLE SYNTHETIC FILTER FABRIC.
9. ALL DRIVEWAYS AND ROADWAYS MUST BE KEPT CLEAN AT ALL TIMES.
10. THE DOWNSLOPE PERIMETER OF ALL DISTURBED AREAS AND STOCKPILES SHALL BE PROTECTED BY A HAY BALE BARRIER OR SEDIMENT FENCE.
11. STOCKPILES SHALL NOT BE LOCATED WITHIN FIFTY (50) FEET OF A FLOOD PLAIN, WETLAND, SLOPE, ROADWAY OR DRAINAGE FACILITY.
12. IMMEDIATELY UPON COMPLETION OF STRIPPING AND STOCKPILING OF SOIL, STOCKPILES SHALL BE SEEDED WITH TEMPORARY VEGETATION. REFER TO STABILIZATION WITH TEMPORARY VEGETATIVE COVER.
13. ALL DISTURBED AREA THAT WILL BE LEFT EXPOSED FOR MORE THAN SIXTY (60) DAYS AND NOT SUBJECT TO CONSTRUCTION TRAFFIC SHALL IMMEDIATELY BE SEEDED WITH TEMPORARY VEGETATION. REFER TO STABILIZATION WITH TEMPORARY VEGETATIVE COVER.
14. ALL CRITICAL AREAS SUBJECT TO EROSION SUCH AS SLOPES SHALL BE SEEDED WITH TEMPORARY VEGETATION AND THEN MULCHED AT A RATE OF 2 TONS PER ACRE IMMEDIATELY FOLLOWING ROUGH GRADING. REFER TO STABILIZATION WITH TEMPORARY VEGETATIVE COVER.
15. ALL DISTURBED AREAS SHALL BE SEEDED WITH PERMANENT VEGETATION IMMEDIATELY FOLLOWING FINAL GRADING. REFER TO STABILIZATION WITH PERMANENT VEGETATIVE COVER.
16. IF THE SEASON DOES NOT PERMIT THE ESTABLISHMENT OF SEED THE STOCKPILE AND/OR DISTURBED AREA SHALL BE PROTECTED WITH MULCH, OR AN APPROVED EQUIVALENT. MULCH SHALL BE SECURED BY AN APPROVED METHOD (LIQUID BINDER, CRIMPING, PEG AND TWINE). REFER TO STABILIZATION WITH MULCH ONLY.
17. ALL DEWATERING OPERATIONS MUST DISCHARGE INTO AN APPROVED SEDIMENT FILTRATION DEVICE SO PLACED AS NOT TO CAUSE EROSION OF THE DOWNSLOPE AREA. FIELD PLACEMENT AND USE OF STRUCTURES MUST BE APPROVED BY THE SOIL CONSERVATION DISTRICT PRIOR TO COMMENCEMENT OF THE DEWATERING OPERATION.
18. ALL DEBRIS CREATED AS A RESULT OF CONSTRUCTION IS TO BE STOCKPILED, PROPERLY CONTAINED, AND THEN REMOVED BY THE CONTRACTOR.
19. IT IS THE RESPONSIBILITY OF THE CONTRACTOR TO PROVIDE CONFIRMATION OF LIME, FERTILIZER AND SEED APPLICATION RATES AT THE REQUEST OF THE SOIL CONSERVATION DISTRICT.
20. MAXIMUM SIDE SLOPES OF ALL PROPOSED SURFACES SHALL NOT NOT BE CONSTRUCTED STEEPER THAN 4:1.
21. OFF SITE SEDIMENT DISTURBANCE MAY REQUIRE ADDITIONAL CONTROL MEASURES TO BE DETERMINED BY THE DISTRICT EROSION CONTROL INSPECTOR.
22. THE DISTRICT EROSION CONROL INSPECTOR MAY REQUIRE ADDITIONAL MEASURES TO BE INSTALLED.
23. NJSA 4:24-39 ET SEQ REQUIRES THAT NO CERTIFICATE OF OCCUPANCY BE ISSUED BEFORE THE COMPLETION OF A SOIL COMPACTION MITIGATION VERIFICATION FORM AND CONFIRMATION BY THE DISTRICT INSPECTOR THAT THE COMPACTION MITIGATION REQUIREMENTS IN THE STANDARD FOR LAND GRADING HAVE BEEN SUFFICIENTLY ADDRESSED.

## INTERMEDIATE CONTROL STANDARDS

### DUST CONTROL

A. APPLICABILITY

1. THIS PRACTICE IS APPLICABLE IF DUST BECOMES A PROBLEM DURING EXCAVATION AND GRADING OPERATIONS BECAUSE OF LOW MOISTURE CONTENT IN THE SOIL.

B. MATERIAL AND METHODS

1. ALL AREAS SUBJECT TO DUST MOVEMENT SHALL BE SPRINKLED WITH WATER UNTIL THE SURFACE IS MOIST. THIS PROCEDURE SHALL BE REPEATED AS REQUIRED TO MAINTAIN A MOISTURE CONTENT IN THE SOIL THAT IS SUFFICIENT TO PREVENT DUST MOVEMENT.
2. IF THE APPLICATION OF WATER BECOMES IMPRACTICAL OR INEFFECTIVE, THE USE OF CALCIUM CHLORIDE IS ACCEPTABLE, PROVIDED THAT THERE ARE NO LOCAL OR STATE REGULATIONS RESTRICTING ITS USE. CALCIUM CHLORIDE IN THE FORM OF LOOSE, DRY GRANULES OR FLAKES FINE ENOUGH TO FEED THROUGH A COMMON SPREADER SHALL SPREAD OVER THE SUSCEPTIBLE AREAS AT A RATE THAT WILL KEEP THE SURFACE MOIST BUT NOT CAUSE POLLUTION OR DAMAGE TO VEGETATION. IF USED ON STEEP SLOPES, OTHER PRACTICES SHALL BE IMPLEMENTED TO PREVENT WASHING IN TO STREAMS OR ACCUMULATION AROUND VEGETATION.

### MANAGEMENT OF HIGH ACID PRODUCING SOILS

A. APPLICABILITY

1. THIS PRACTICE IS APPLICABLE TO ANY HIGH ACID PRODUCING SOIL MATERIAL HAVING A pH OF 4.0 OR LESS OR CONTAINING IRON SULFIDE. THESE SOILS MAY BE PRESENT IN UNDISTURBED SOILS AT VARYING DEPTHS INCLUDING NEAR THE SURFACE TO EXCAVATIONS OR DEEP DISTURBANCES. ITS PRESENCE MAY BE SIGNIFICANT OR LIMITED IN THE SOIL PROFILE. HIGH ACID PRODUCING SOILS ARE COMMONLY BLACK, DARK BROWN, GRAY OR GREENISH WITH SILVERY PYRITE OR MARCASITE NUGGETS OR FLAKED.

B. MATERIAL AND METHODS

1. LIMIT THE AREA OF DISTURBANCE AREA AND EXPOSURE TIME WHEN THESE SOILS ARE ENCOUNTERED.
2. TO PREVENT CROSS CONTAMINATION, TOPSOIL STRIPPED FROM THE SITE SHALL BE STOCKPILED SEPARATELY FROM HIGH ACID PRODUCING SOILS. STOCKPILES SHOULD BE LOCATED ON LEVEL LAND AND THEIR ENTIRE PERIMETER ENCLOSED BY A SILT FENCE TO MINIMIZE MOVEMENT. STOCKPILES STORED FOR MORE THAN 30 DAYS SHALL BE COVERED WITH A PROPERLY ANCHORED, HEAVY GRADE SHEET OF POLYETHYLENE.
3. IMMEDIATELY UPON COMPLETION OF ROUGH GRADING, THESE SOILS SHALL BE COVERED WITH A MINIMUM OF 12 INCHES OF SETTLED SOIL HAVING A pH OF 5.0 OR MORE.
   a. AREAS WHERE TREES AND SHRUBS ARE TO BE PLANTED SHALL BE COVERED WITH A MINIMUM OF 24 INCHES OF SETTLED SOIL HAVING A pH OF 5.0 OR MORE.
   b. DISPOSAL AREAS SHALL NOT BE LOCATED WITHIN 24 INCHES OF ANY SURFACE OF A SLOPE OR BANK SUCH AS BERMS, DITCHES STREAM BANKS AND OTHER WATERCOURSES TO PREVENT POTENTIAL LATERAL LEACHING DAMAGES.
4. ADDITIONAL SOIL EROSION AND SEDIMENT CONTROL MEASURES SHALL BE PLACED WHEN SUCH SOIL IS ENCOUNTERED TO LIMIT ITS MOVEMENT FROM, AROUND OR OFF THE SITE.

### STABILIZATION WITH TEMPORARY VEGETATIVE COVER

A. APPLICABILITY

1. THIS PRACTICE IS APPLICABLE TO AREAS SUBJECT TO EROSION, WHERE TEMPORARY STABILIZATION OF EXPOSED SOILS IS NEEDED TO REDUCE DAMAGE FROM WIND AND RAIN, SLOW THE OVERLAND MOVEMENT OF RUNOFF AND INCREASE INFILTRATION AND RETAIN SOIL AND NUTRIENT ON SITE.

B. MATERIAL AND METHODS

1. REFER TO PERMANENT VEGETATIVE COVER, ITEM B, #1, #2, #3 AND #6.
2. UNIFORMLY APPLY SWITCHGRASS AT A RATE OF 0.5 POUND PER 1,000 SQUARE FEET.
3. REFER TO PERMANENT VEGETATIVE COVER, ITEM C, #2 AND #3.
4. REFER TO PERMANENT VEGETATIVE COVER, ITEM D, #1, #2, #3 AND #4.

### STABILIZATION WITH MULCH ONLY

A. APPLICABILITY

1. THIS PRACTICE IS APPLICABLE TO AREAS SUBJECT TO EROSION, WHERE THE SEASON AND OTHER CONDITIONS MAY NOT BE SUITABLE FOR GROWING AN EROSION-RESISTANT COVER OR WHERE STABILIZATION IS NEEDED FOR A SHORT PERIOD UNTIL MORE SUITABLE PROTECTION CAN BE APPLIED.

B. METHODS AND MATERIALS

1. MULCH MATERIALS SHALL BE UNROTTED SMALL GRAIN STRAW, HAY FREE OF SEEDS OR SALT HAY UNIFORMLY APPLIED AT A RATE OF 90 TO 115 POUNDS PER 1,000 SQUARE FEET. THE MULCH CHOPPER-BLOWERS MUST NOT GRIND THE MATERIAL.
2. SPREAD MULCH UNIFORMLY BY HAND OR MECHANICALLY SO THAT APPROXIMATELY 85% OF THE SOIL SURFACE WILL BE COVERED.
3. MULCH SHALL BE SECURED IMMEDIATELY AFTER PLACEMENT TO MINIMIZE LOSS BY WIND OR WATER BY AN APPROVED METHOD (LIQUID-MULCH BINDER, CRIMPER, PEG AND TWINE, OR NETTING).
4. OTHER SUITABLE METHODS MAY BE USED IF PREAPPROVED BY THE SOIL CONSERVATION DISTRICT SUCH AS:
   a. ASPHALT EMULSION OR CUTBACK ASPHALT IS RECOMMENDED AT A RATE OF 14 TO 28 GALLONS PER 1,000 SQUARE FEET. THIS IS SUITABLE A LIMITED PERIOD OF TIME WHERE CONSTRUCTION TRAFFIC IS NOT A PROBLEM.
   b. SYNTHETIC OR ORGANIC SOIL STABILIZERS MAY BE USED UNDER SUITABLE CONDITIONS AND IN QUANTITIES AS RECOMMENDED BY THE MANUFACTURER.
   c. WOOD-FIBER OR PAPER-FIBER MULCH AT THE RATE OF 1,500 POUNDS PER ACRE MAY BE APPLIED BY A HYDROSEEDER OR HYDROMULCHING.
   d. WOOD CHIPS APPLIED UNIFORMLY TO MINIMUM DEPTH OF 2 INCHES MAY BE USED, BUT SHALL NOT BE USED ON AREAS WHERE FLOWING WATER COULD WASH THEM INTO AN INLET AND PLUG IT.

## SOIL DE-COMPACTION AND TESTING REQUIREMENTS

### SOIL COMPACTION TESTING REQUIREMENTS

1. SUBGRADE SOILS PRIOR TO THE APPLICATION OF TOPSOIL (SEE PERMANENT CONTROL STANDARDS NOTES FOR TOPSOIL REQUIREMENTS) SHALL BE FREE OF EXCESSIVE COMPACTION TO A DEPTH OF 6.0 INCHES TO ENHANCE THE ESTABLISHMENT OF PERMANENT VEGETATIVE COVER.
2. AREAS OF THE SITE WHICH ARE SUBJECT TO COMPACTION TESTING AND/OR MITIGATION ARE GRAPHICALLY DENOTED ON THE CERTIFIED SOIL EROSION CONTROL PLAN.
3. COMPACTION TESTING LOCATIONS ARE DENOTED ON THE PLAN. A COPY OF THE PLAN OR PORTION OF THE PLAN SHALL BE USED TO MARK LOCATIONS OF TESTS, AND ATTACHED TO THE COMPACTION REMEDIATION FORM, AVAILABLE FROM THE LOCAL SOIL CONSERVATION DISTRICT. THIS FORM MUST BE FILLED OUT AND SUBMITTED PRIOR TO RECEIVING A CERTIFICATE OF COMPLIANCE FROM THE DISTRICT.
4. IN THE EVENT THAT TESTING INDICATES COMPACTION IN EXCESS OF THE MAXIMUM THRESHOLDS INDICATED FOR THE SIMPLIFIED TESTING METHODS (SEE DETAILS), THE CONTRACTOR/OWNER SHALL HAVE THE OPTION TO PERFORM EITHER (1) COMPACTION MITIGATION OVER THE ENTIRE MITIGATION AREA DENOTED ON THE PLAN (EXCLUDING EXEMPT ARES), OR (2) PERFORM ADDITIONAL, MORE DETAILED TESTING TO ESTABLISH THE LIMITS OF EXCESSIVE COMPACTION WHEREUPON ONLY THE EXCESSIVELY COMPACTED AREAS WOULD REQUIRE COMPACTION MITIGATION. ADDITIONAL DETAILED TESTING SHALL BE PERFORMED BY A TRAINED, LICENSED PROFESSIONAL.

### COMPACTION TESTING METHODS

A. PROBING WIRE TEST (SEE DETAIL)
B. HAND-HELD PENETROMETER TEST (SEE DETAIL)
C. TUBE BULK DENSITY TEST (LICENSED PROFESSIONAL ENGINEER REQUIRED)
D. NUCLEAR DENSITY TEST (LICENSED PROFESSIONAL ENGINEER REQUIRED)

NOTE: ADDITIONAL TESTING METHODS WHICH CONFORM TO ASTM STANDARDS AND SPECIFICATIONS, AND WHICH PRODUCE A DRY WEIGHT, SOIL BULKY DENSITY MEASUREMENT MAY BE ALLOWED SUBJECT TO DISTRICT APPROVAL.

SOIL COMPACTION TESTING IS NOT REQUIRED IF/WHEN SUBSOIL COMPACTION REMEDIATION (SCARIFICATION/TILLAGE (6" MINIMUM DEPTH) OR SIMILAR) IS PROPOSED AS PART OF THE SEQUENCE OF CONSTRUCTION.

### PROCEDURES FOR SOIL COMPACTION MITIGATION

PROCEDURES SHALL BE USED TO MITIGATE EXCESSIVE SOIL COMPACTION PRIOR TO PLACEMENT OF TOPSOIL AND ESTABLISHMENT OF PERMANENT VEGETATIVE COVER.

RESTORATION OF COMPACTED SOILS SHALL BE THROUGH DEEP SCARIFICATION/TILLAGE (6" MINIMUM DEPTH) WHERE THERE IS NO DANGER TO UNDERGROUND UTILITIES (CABLES, IRRIGATION SYSTEMS, ETC.). IN THE ALTERNATIVE, ANOTHER METHOD AS SPECIFIED BY A NEW JERSEY LICENSED PROFESSIONAL ENGINEER MAYBE SUBSTITUTED SUBJECT TO DISTRICT APPROVAL.

## PERMANENT CONTROL STANDARDS

### STABILIZATION WITH PERMANENT VEGETATIVE COVER

A. TOPSOIL

1. IMMEDIATELY BEFORE TOPSOIL APPLICATION, THE SUBGRADE SHALL BE SCARIFIED A MINIMUM DEPTH OF 6" TO PROVIDE A GOOD BOND WITH THE TOPSOIL. THIS PRACTICE IS PERMISSIBLE ONLY WHERE THERE IS NO DANGER TO UNDERGROUND UTILITIES. WITHIN DRAINAGE BASINS AND SWALES, THE SUBGRADE SHALL BE SCARIFIED A MINIMUM DEPTH OF 12" TO PROMOTE INFILTRATION.
2. TOPSOIL OBTAINED FROM STRIPPING WITHIN THE LIMITS OF THE SITE OR FURNISHED FROM OUTSIDE THE SITE SHALL CONTAIN NO STONES, LUMPS, ROOTS OR SIMILAR OBJECTS LARGER THAN TWO INCHES IN ANY DIMENSION, AND SHALL HAVE A pH OF NOT LESS THAN 5.0 NOR GREATER THAN 7.5.
3. WHEN THE pH VALUE OF THE TOPSOIL IS LESS THAN 5.0, IT SHALL BE INCREASED BY APPLYING GROUND LIMESTONE AT A RATE NECESSARY TO ATTAIN AN ACCEPTABLE pH LEVEL.
4. TOPSOIL FURNISHED FROM SOURCES OUTSIDE THE LIMITS OF THE SITE SHALL HAVE A MINIMUM ORGANIC CONTENT OF NOT LESS THAN 2.75%. ORGANIC MATTER CONTENT MAY NOT BE RAISED BY ADDITIVES.
5. THE TOPSOIL SHALL BE APPLIED TO A UNIFORM DEPTH OF 5 INCHES (FIRMED IN PLACE).

B. SEEDBED PREPARATION

1. APPLY LIMESTONE GROUNDED LIMESTONE AND FERTILIZER ACCORDING TO SOIL TEST RECOMMENDATIONS SUCH AS OFFERED BY RUTGERS COOPERATIVE EXTENSION. SOIL SAMPLE MAILERS ARE AVAILABLE FROM THE LOCAL RUTGERS COOPERATIVE EXTENSION OFFICE.
2. APPLY LIMESTONE (EQUIVALENT TO 50% CALCIUM PLUS MAGNESIUM OXIDES) AT THE FOLLOWING RATE UNLESS SOIL TESTING INDICATES OTHERWISE:

| SOIL TEXTURE | APPLICATION RATE |
|---|---|
| CLAY, CLAY LOAM & HIGH ORGANIC SOIL | 135 POUNDS PER 1,000 SQUARE FEET |
| SANDY LOAM, LOAN & SILT LOAM | 90 POUNDS PER 1,000 SQUARE FEET |
| LOAMY SAND & SAND | 45 POUNDS PER 1,000 SQUARE FEET |

3. APPLY FERTILIZER AT A RATE OF 11 LB. PER 1,000 SQ. FT USING 10-10-10 OR EQUIVALENT WITH 50% WATER INSOLUBLE NITROGEN UNLESS SOIL TESTING INDICATES OTHERWISE.
4. WORK LIME AND FERTILIZER INTO THE SOIL AS NEARLY AS PRACTICAL TO A DEPTH OF 4 INCHES WITH A DISC, SPRINGTOOTH HARROW OR OTHER SUITABLE EQUIPMENT. THE FINAL HARROWING OR DISCING OPERATION SHALL BE ON THE GENERAL CONTOUR. CONTINUE TILLAGE UNTIL A REASONABLY UNIFORM, FINE SEEDBED IS PREPARED. ALL BUT CLAY OR SILTY SOILS AND COARSE SANDS SHOULD BE ROLLED TO FIRM THE SEEDBED WHEREVER FEASIBLE.
5. REMOVE FROM THE SURFACE ALL STONES TWO INCHES OR LARGER IN ANY DIMENSION, REMOVE ALL OTHER DEBRIS SUCH AS WIRE, CABLE, TREE ROOTS, PIECES OF CONCRETE, CLODS, LUMPS OR OTHER UNSUITABLE MATERIAL.
6. INSPECT SEEDBED JUST BEFORE SEEDING. IF TRAFFIC HAS LEFT SOIL COMPACTED, THE AREA MUST BE RETILLED AND FIRMED AS ABOVE.

C. SEEDING

1. SEED MIXTURE:

| MIX FOR LAWN AREAS | APPLICATION RATE |
|---|---|
| STRONG CREEPING RED FESCUE | 1.4 POUNDS PER 1,000 SQUARE FEET |
| HARD FESCUE | 2.7 POUNDS PER 1,000 SQUARE FEET |

2. ALL SEED MUST BE RAKED OR DRILLED INTO SOIL. NORMAL SEEDING DEPTH IS FROM 1/4 TO 1/2 INCH.
3. WHERE FEASIBLE, EXCEPT WHERE EITHER A CULTIPACKER TYPE SEEDER OR HYDROSEEDER IS USED, THE SEEDBED SHOULD BE FIRMED FOLLOWING SEEDING OPERATIONS WITH A ROLLER OR LIGHT DRAG. SEEDING OPERATIONS SHOULD BE ON THE CONTOUR.

D. MULCHING

1. MULCH IS REQUIRED ON ALL SEEDED AREAS TO INSURE AGAINST EROSION BEFORE GRASS IS ESTABLISHED AND TO PROMOTE FASTER AND EARLIER ESTABLISHMENT.
2. MULCH MATERIALS SHALL BE UNROTTED SMALL GRAIN STRAW, HAY FREE OF SEEDS OR SALT HAY UNIFORMLY APPLIED AT A RATE OF 70 TO 90 POUNDS PER 1,000 SQUARE FEET. OTHER SUITABLE METHODS MAY BE USED IF PREAPPROVED BY THE SOIL CONSERVATION DISTRICT. MULCH CHOPPER-BLOWERS MUST NOT GRIND THE MATERIAL.
3. SPREAD MULCH UNIFORMLY BY HAND OR MECHANICALLY SO THAT APPROXIMATELY 85% OF THE SOIL SURFACE WILL BE COVERED.
4. MULCH SHALL BE SECURED IMMEDIATELY AFTER PLACEMENT TO MINIMIZE LOSS BY WIND OR WATER BY AN APPROVED METHOD (LIQUID-MULCH BINDER, CRIMPER, PEG AND TWINE, OR NETTING).

E. IRRIGATION (WHERE FEASIBLE)

IF SOIL MOISTURE IS DEFICIENT, AND MULCH IS NOT USED, SUPPLY NEW SESCHI WITH ADEQUATE WATER (A MINIMUM OF 1/4 INCH TWICE DAILY UNTIL VEGETATION IS WELL ESTABLISHED). THIS IS ESPECIALLY TRUE WHEN SEEDING IN ABNORMALLY DRY OR HOT DROUGHTY SITES.

F. TOP DRESSING

SINCE SLOW RELEASE NITROGEN FERTILIZER IS PRESCRIBED UNDER

IF GROSS NITROGEN DEFICIENCY EXISTS TO THE EXTENT THE TURF

AT 10 POUNDS PER 1,000 SQUARE FEET.

## SOIL CLASSIFICATION:

SOILS MAP PROVIDED BY WEB SOIL SURVEY 2.0, NATIONAL COOPERATIVE SOIL SURVEY, USDA NATIONAL RESOURCES CONSERVATION SERVICE

PROJECT IS IN: GokB – GALLOWAY FINE SAND, 0 TO 5 PERCENT SLOPE

## POTENTIAL ENVIRONMENTAL RESTRICTIONS:

FLOOD PLAINS DO NOT OCCUR ON THE PROJECT LIMITS

## SEQUENCE OF CONSTRUCTION

DURATION OF CONSTRUCTION

ANTICIPATED COMMENCEMENT: OCTOBER 2020

ANTICIPATED COMPLETION: APRIL 2021

| DESCRIPTION OF CONSTRUCTION ACTIVITY | WEEK |
|---|---|
| 1. PLACE APPLICABLE SOIL EROSION AND SEDIMENT CONTROL MEASURES | 1ST |
| 2. DEMOLISH EXISTING IMPROVEMENTS. | 2ND-3RD |
| 3. CONSTRUCT NEW BUILDING. | 4TH-20TH |
| 4. CONSTRUCT CONCRETE APRONS. | 20TH |
| 5. ROUGH GRADE. | 21ST-22ND |
| 6. INSTALL ASPHALT PAVING. | 23RD-24TH |
| 7. FINE GRADE, SEED AND STABILIZE ALL DISTURBED AREAS. | 25TH-26TH |
| 8. REMOVE ALL REMAINING SOIL EROSION MEASURES WHEN VEGETATIVE COVER IS ESTABLISHED. | WHEN STABLE |

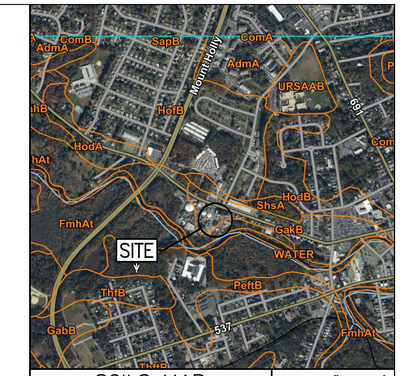


SOILS MAP — SCALE 1"=1,000'
MOUNT HOLLY TOWNSHIP

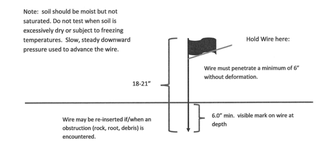


DETAIL 2 — PROBING WIRE TEST
N.T.S. — 15.5 GA STEEL WIRE (SURVEY FLAG)

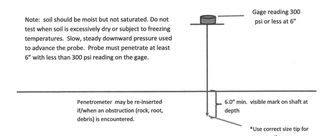


DETAIL 3 — HANDHELD SOIL PENETROMETER TEST
N.T.S.

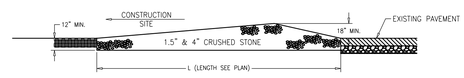


DETAIL 1 — STABILIZED CONSTRUCTION ENTRANCE
N.T.S.

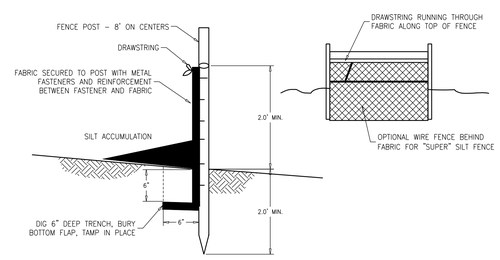


DETAIL 4 — SILT FENCE
N.T.S.

| NO. | DATE | APPR. | REVISION |
|---|---|---|---|


Dante Guzzi Engineering Associates
203 South Main Street, Cape May Court House, New Jersey 08210
telephone (609) 465-3333 N.J. Certificate of Authorization No. 24GA27967500
facsimile (609) 465-3357 www.guzziengineering.com

DANTE GUZZI, P.E.
PROFESSIONAL ENGINEER N.J. LICENSE NO. 36455


8/25/2020
DATE

**SOIL EROSION AND SEDIMENT CONTROL DETAILS**
**250 RANCOCAS ROAD**
**BLOCK 133 LOT 1.01**
**TOWNSHIP OF MOUNT HOLLY**
**BURLINGTON COUNTY, NEW JERSEY**

| FILE | DATE | DRAWN BY | DRAWING NO. |
|---|---|---|---|
| 250RANCOCAS-SITE | 08/25/2020 | JG | C2 |
| SCALE: AS SHOWN | PROJECT NO.: P-20-125 | CHECKED BY: DG — DATE: 08/25/2020 | SHEET 2 OF 2 — REV. NO. |

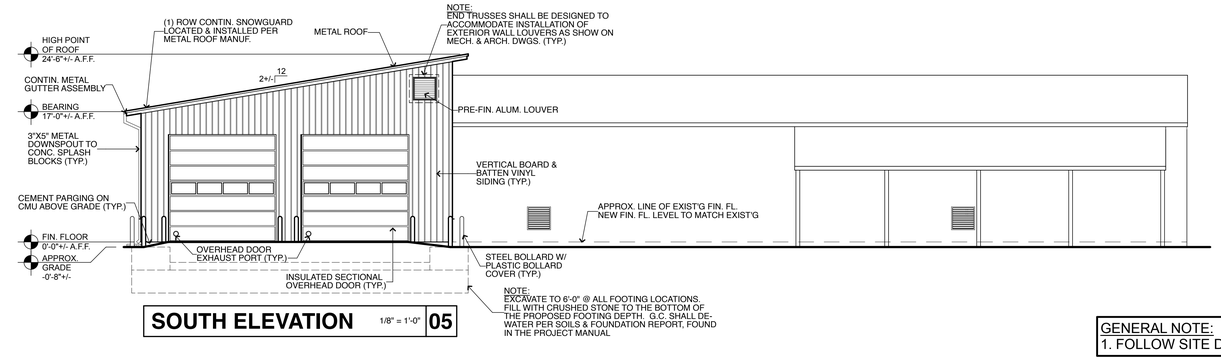


## SOUTH ELEVATION 1/8" = 1'-0" 05

GENERAL NOTE:
1. FOLLOW SITE DWGS. FOR SITE INFO & GRADING

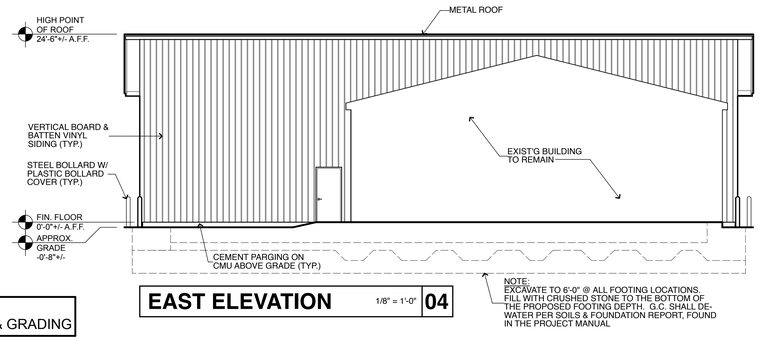


## EAST ELEVATION 1/8" = 1'-0" 04

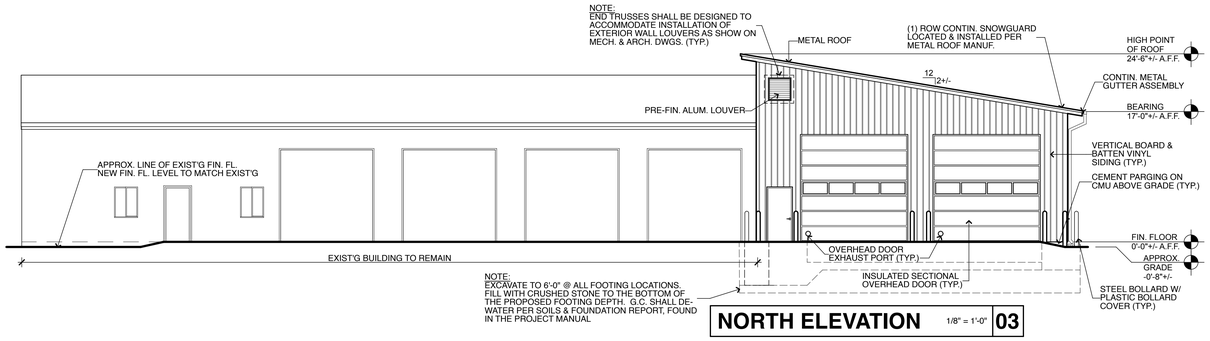


## NORTH ELEVATION 1/8" = 1'-0" 03

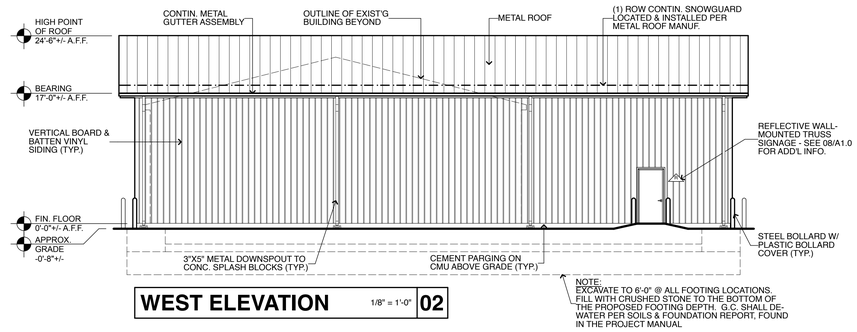


## WEST ELEVATION 1/8" = 1'-0" 02

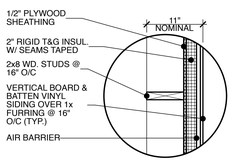


NOTE:
1x FURRING TO BE INSTALLED AS REQ'D BY SIDING MANUF. TO MEET FASTENING REQUIREMENTS.

## WALL TYPE W1 SCALE: 1" = 1'-0" 07

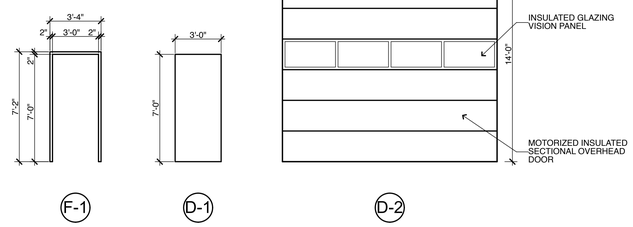


## DOOR/FRAME TYPES SCALE: 1/4" = 1'-0"

**CONTRACTOR'S OPTION: 800S162-54 MTL. STUDS @ 16" O/C IN LIEU OF WOOD STUDS SHOWN - SEE SPECIFICATION SECTIONS 054000 & 054400 FOR ADD'L INFO.**

### DOOR SCHEDULE

| DOOR | | | | | | | FRAME | | | | | | | | | | REMARKS |
|---|---|---|---|---|---|---|---|---|---|---|---|---|---|---|---|---|---|
| NUMBER | TYPE | WIDE | HEIGHT | THICKNESS | MATERIAL | GLAZ'G TYPE | TYPE | WIDE | HEIGHT | MATERIAL | GLAZ'G TYPE | JAMB/HEAD (B) | RAT'G (MIN) | THRESHOLD | HDW SET | | |
| 100.1 | D-1 | 3'-0" | 7'-0" | 1 3/4" | IM | N/A | F-1 | 3'-4" | 7'-2" | PHM | N/A | 03/04 | N/A | AL | 01 | | HINGED DOOR |
| 100.2 | D-2 | 14'-0" | 14'-0" | 2" | IM | MANUF | N/A | 14'-4" | 14'-2" | MANUF | N/A | 05/06 | N/A | N/A | (A) | | SECTIONAL DOOR |
| 100.3 | D-2 | 14'-0" | 14'-0" | 2" | IM | MANUF | N/A | 14'-4" | 14'-2" | MANUF | N/A | 05/06 | N/A | N/A | (A) | | SECTIONAL DOOR |
| 100.4 | D-1 | 3'-0" | 7'-0" | 1 3/4" | IM | N/A | F-1 | 3'-4" | 7'-2" | PHM | N/A | 03/04 | N/A | AL | 01 | | HINGED DOOR |
| 100.5 | D-2 | 14'-0" | 14'-0" | 2" | IM | MANUF | N/A | 14'-4" | 14'-2" | MANUF | N/A | 05/06 | N/A | N/A | (A) | | SECTIONAL DOOR |
| 100.6 | D-2 | 14'-0" | 14'-0" | 2" | IM | MANUF | N/A | 14'-4" | 14'-2" | MANUF | N/A | 05/06 | N/A | N/A | (A) | | SECTIONAL DOOR |
| 100.7 | D-1 | 3'-0" | 7'-0" | 1 3/4" | IM | N/A | F-1 | 3'-4" | 7'-2" | PHM | N/A | 03/04 | N/A | AL | 01 | | HINGED DOOR |

**DOOR SCHEDULE KEY**

IM: Insulated Metal
N/A: Not Applicable
PHM: Painted Hollow Metal
MANUF: Sectional Door Manufacturer Frame & Trims

**NOTES:**
(A) Refer to Spec Section 083613
(B) Jamb/Head details located on sheet IB1.2

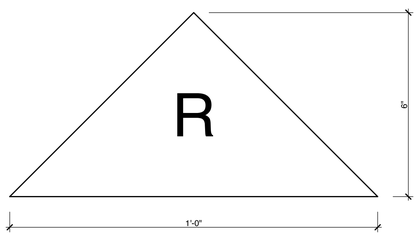


## TRUSS SIGNAGE SCALE: NTS 08

**NOTE:**
**TRUSS SIGNAGE NOT REQUIRED IF METAL TRUSS OPTION IS TAKEN.**

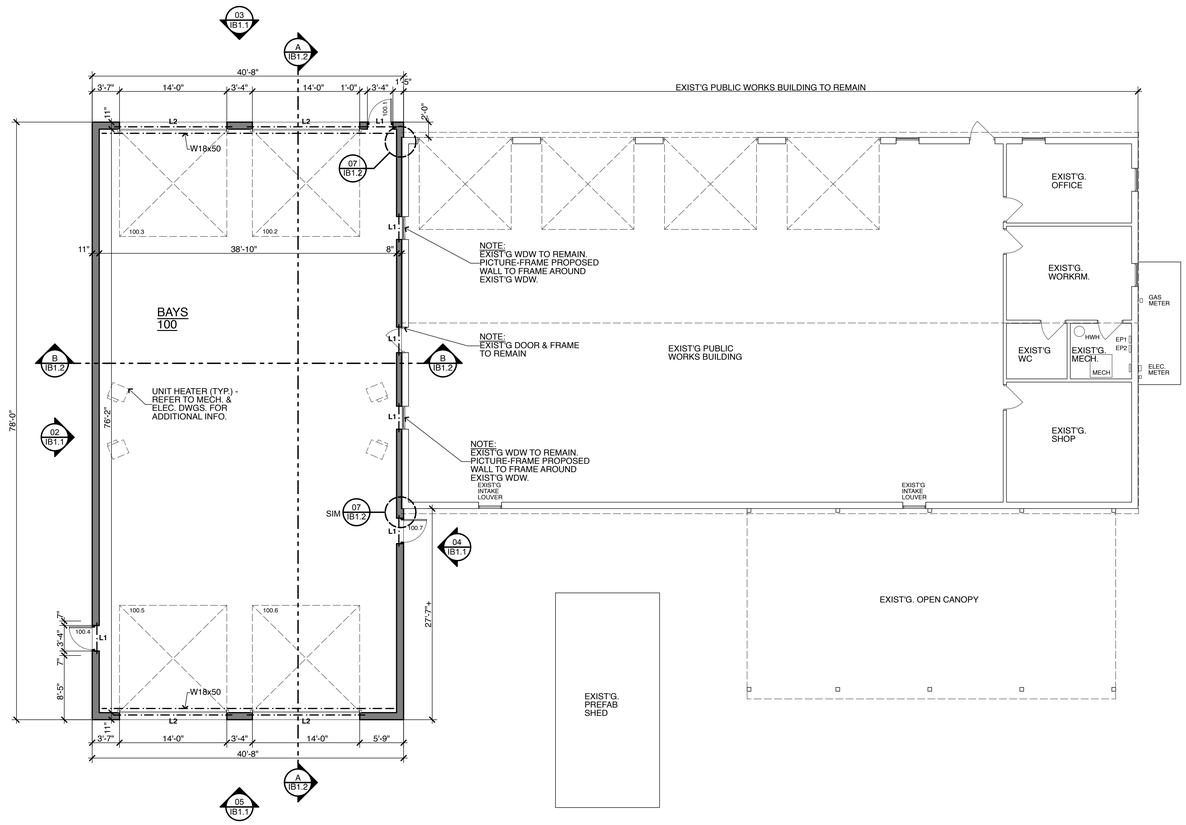


## PROPOSED PLAN SCALE: 1/8" = 1'-0" 01 A1.0

PRINT DATE: 8/31/20

REGAN YOUNG, AIA
21A00912100


REGAN YOUNG ENGLAND BUTERA
REFERENDUMS · ENGINEERING · ARCHITECTURE · DESIGN
456 HIGH STREET • MT. HOLLY, NEW JERSEY 08060 USA
+1(609)265-2652/-0333FAX • 21A00912100 • RYEBREAD.COM


MT HOLLY FIRE INTERIM BAYS
250 RANCOCAS MT HOLLY ROAD
MOUNT HOLLY, NEW JERSEY

TITLE: PROPOSED PLAN, DETAILS & ELEVATIONS

DRAWING DATE: 01 JULY 2020
REVISION DATE:

DRAWN BY: PF
COMMISSION NO.: 5475C

IB1.1

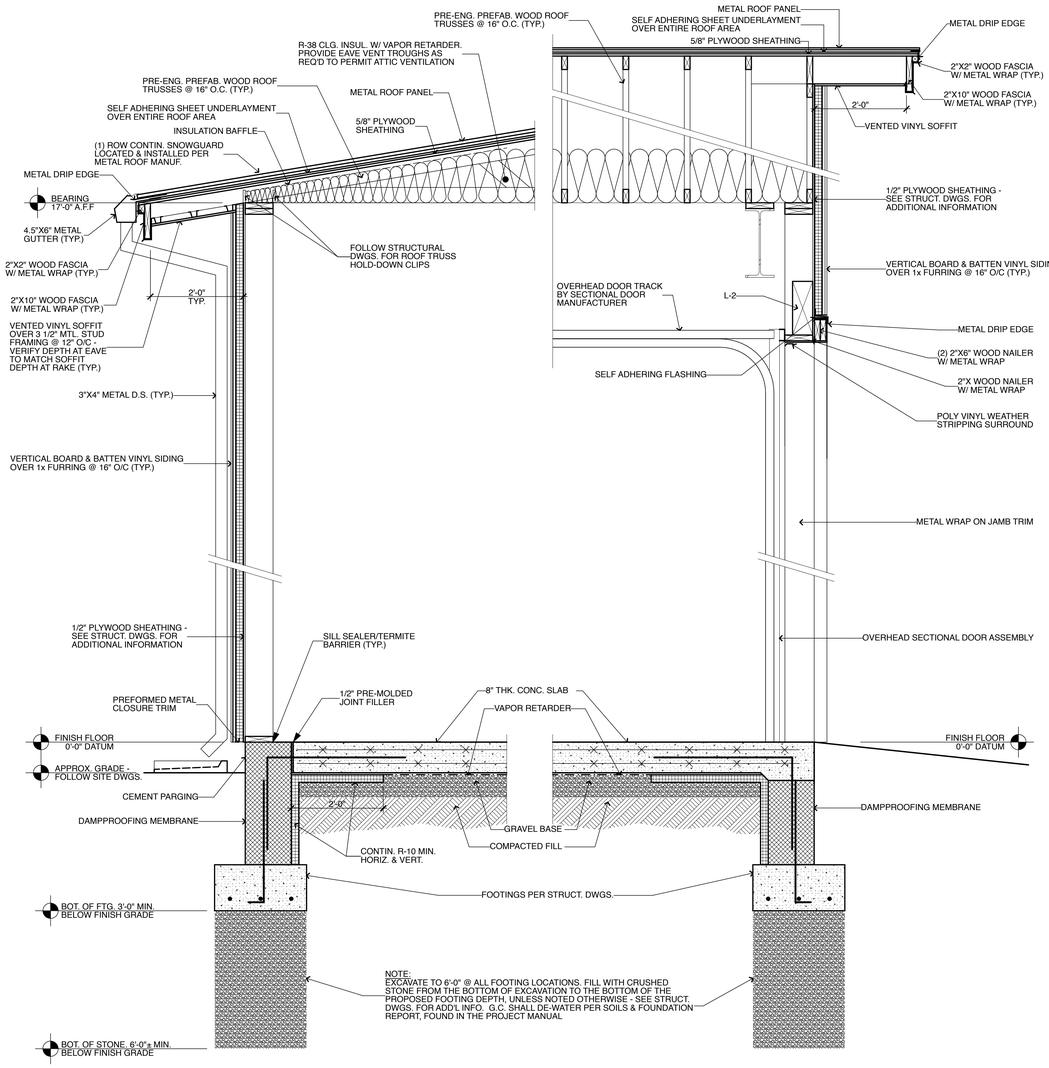


**WALL SECTION** SCALE: 3/4" = 1'-0" | 08 | IB1.2

**WALL SECTION** SCALE: 3/4" = 1'-0" | 09 | IB1.2

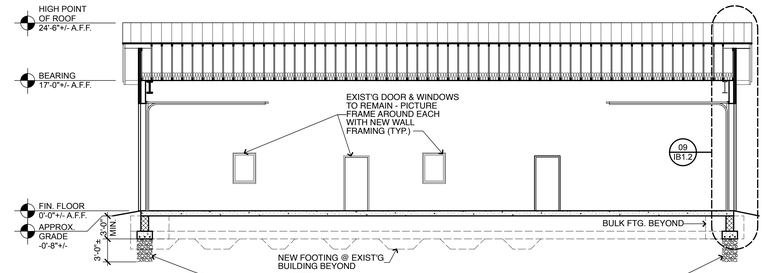


**BUILDING SECTION** SCALE: 1/8" = 1'-0" | 01 | IB1.2

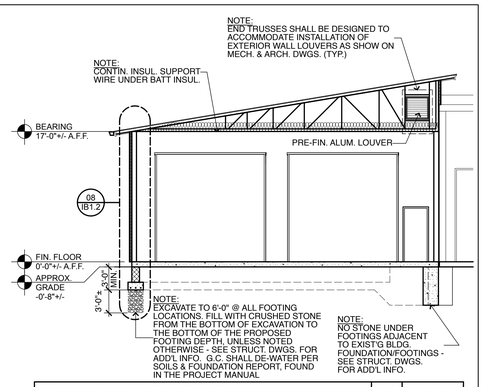


**BUILDING SECTION** SCALE: 1/8" = 1'-0" | 02 | IB1.2

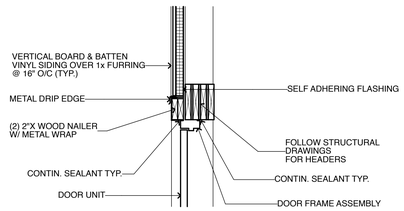


**EXT. DOOR HEAD DETAIL** SCALE: 3/4" = 1'-0" | 03

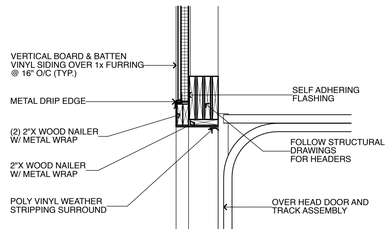


**O.H. DOOR HEAD DETAIL** SCALE: 3/4" = 1'-0" | 05

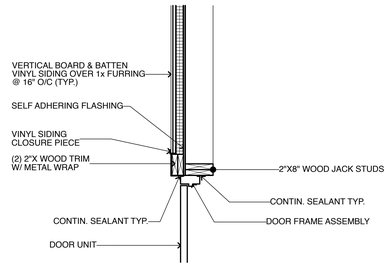


**EXT. DOOR JAMB DETAIL** SCALE: 3/4" = 1'-0" | 04

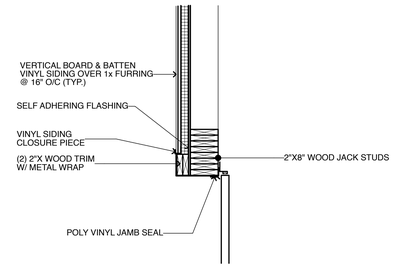


**O.H. DOOR JAMB DETAIL** SCALE: 3/4" = 1'-0" | 06

**CONTRACTOR'S OPTION: MTL. TRUSSES @ 16" O/C IN LIEU OF WOOD TRUSSES SHOWN - SEE SPECIFICATION SECTIONS 054000 & 054400 FOR ADD'L INFO.**

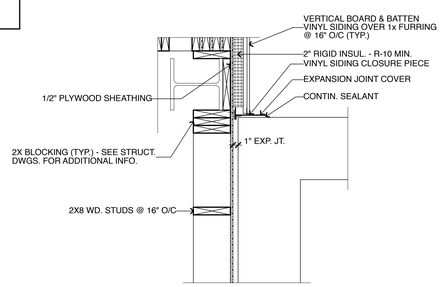


**PLAN DETAIL** SCALE: 1" = 1'-0" | 07

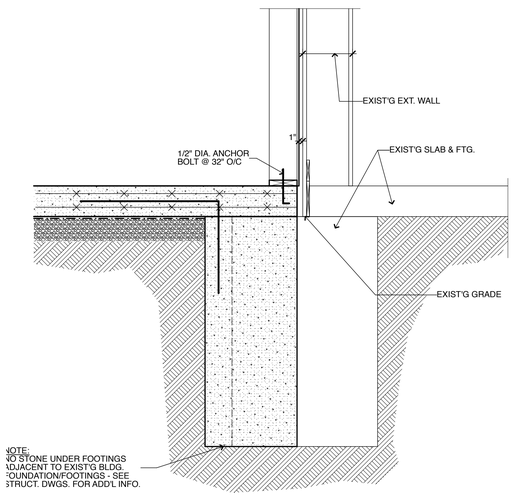


**FTG DTL @ EXIST'G BLDG.** SCALE: 3/4" = 1'-0" | 10 | IB1.2

@ EXIST'G FROST WALL

PRINT DATE: 8/31/20

REGAN YOUNG, AIA
21A00912100


**REGAN YOUNG ENGLAND BUTERA**
REFERENDUMS · ENGINEERING · ARCHITECTURE · DESIGN
456 HIGH STREET • MT. HOLLY, NEW JERSEY 08060 USA
+1(609)265-2652/-0333FAX • 21A00912100 • RYEBREAD.COM


**MT HOLLY FIRE INTERIM BAYS**
250 RANCOCAS MT HOLLY ROAD
MOUNT HOLLY, NEW JERSEY

TITLE: **SECTIONS & DETAILS**

DRAWING DATE: 01 JULY 2020
REVISION DATE:
DRAWN BY: PF
COMMISSION NO.: 5475C

**IB1.2**

2 OF 4

## GENERAL NOTES:

1. FOLLOW NEW ROOF PLAN FOR LOCATIONS OF NEW SELF ADHERING ROOF UNDERLAYMENT AREAS.
2. ALL DETAILS AND UNDERLAYMENT TYPES SHALL MEET METAL ROOF SPECIFIED WARRANTY REQUIREMENTS. FOLLOW SPECIFICATIONS FOR TOTAL SYSTEMS WARRANTY REQUIREMENTS.
3. ROOFING MANUFACTURER'S DETAILS REQUIRED TO MEET SPECIFIED WARRANTIES, AND SHALL GOVERN OVER THE DETAILS SHOWN.
4. ALL EXPOSED SEALANTS TO BE CUSTOM COLOR TO MATCH METAL ROOF, FLASHINGS, ETC.
5. ALL METAL FLASHINGS TO BE PROVIDED BY METAL ROOF MANUFACTURER.

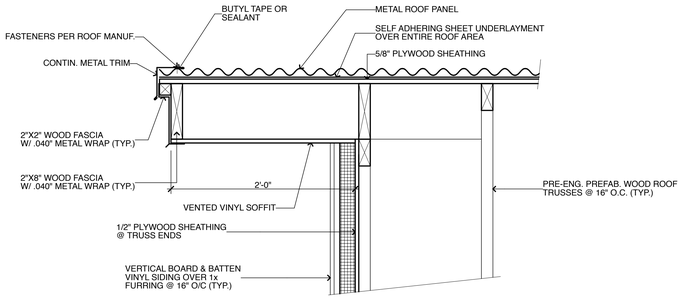


**RAKE** SCALE: 1 1/2" = 1'-0" **02**

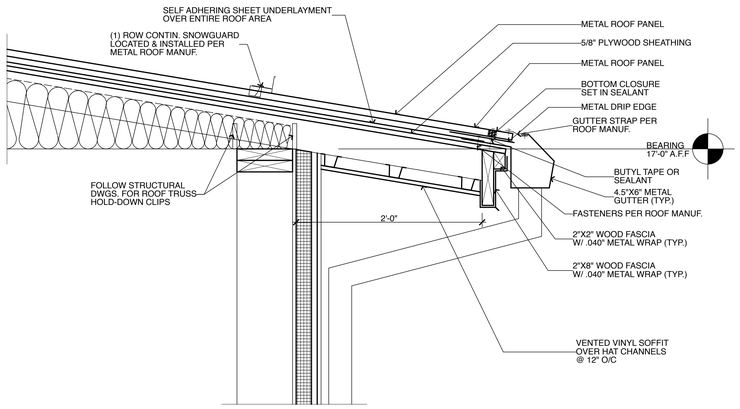


**EAVE** SCALE: 1 1/2" = 1'-0" **03**

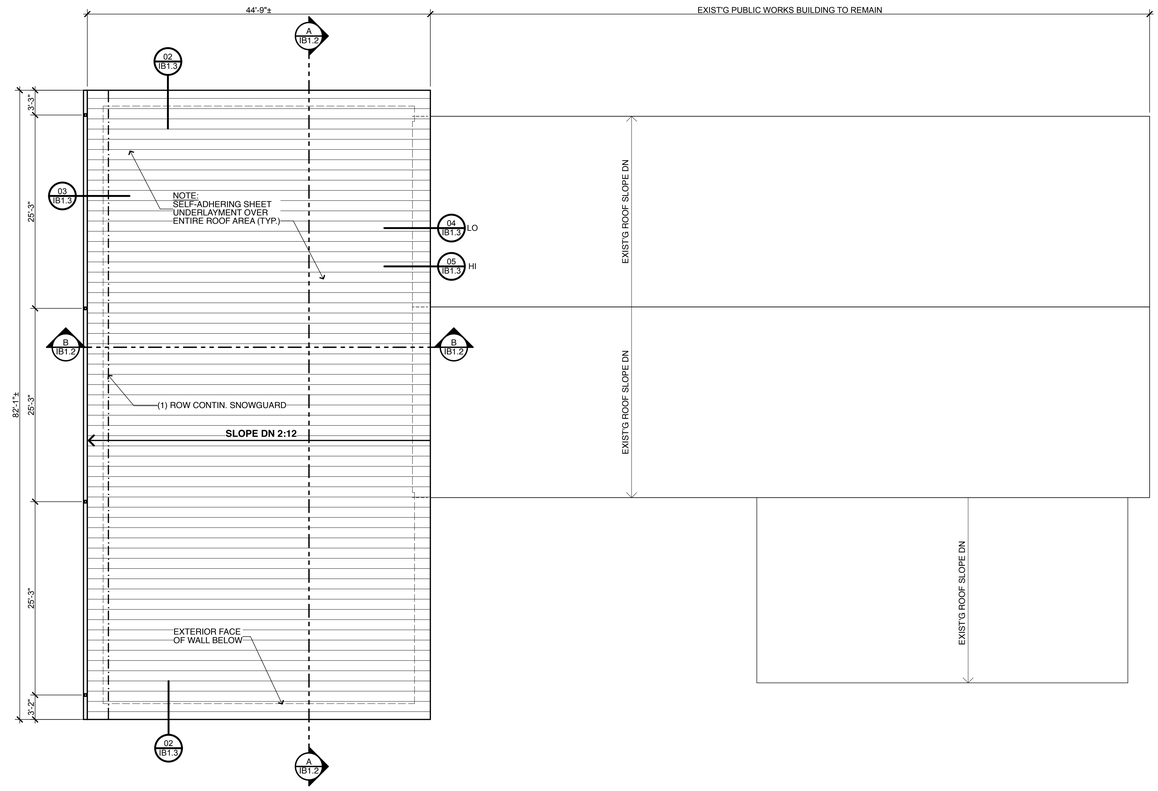


**ROOF PLAN** SCALE: 1/8" = 1'-0" **01 IB1.3**

**CONTRACTOR'S OPTION: MTL. TRUSSES @ 16" O/C IN LIEU OF WOOD TRUSSES SHOWN - SEE SPECIFICATION SECTIONS 054000 & 054400 FOR ADD'L INFO.**

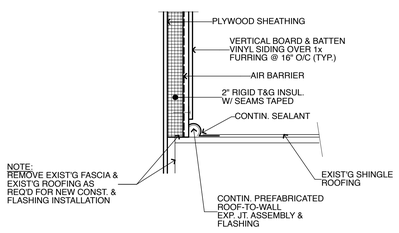


**EXP JT @ SIDEWALL** SCALE: 1 1/2" = 1'-0" **04**

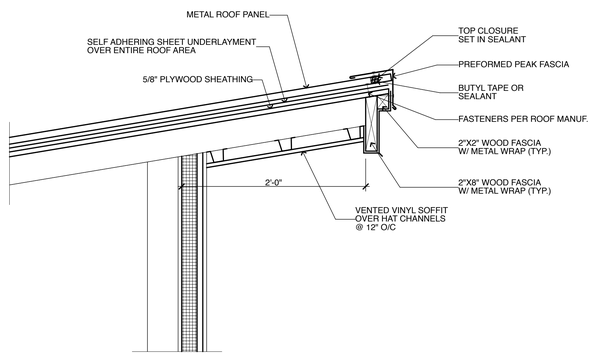


**PEAK** SCALE: 1 1/2" = 1'-0" **05**

PRINT DATE: 8/28/20

REGAN YOUNG, AIA
21AI00912100


**REGAN YOUNG ENGLAND BUTERA**
REFERENDUMS · ENGINEERING · ARCHITECTURE · DESIGN
456 HIGH STREET • MT. HOLLY, NEW JERSEY 08060 USA
+1(609)265-2652/-0333FAX • 21AI00912100 • RYEBREAD.COM


**MT HOLLY FIRE INTERIM BAYS**
250 RANCOCAS MT HOLLY ROAD
MOUNT HOLLY, NEW JERSEY

TITLE: **ROOF PLAN & DETAILS**

| | |
|---|---|
| DRAWING DATE: | 01 JULY 2020 |
| REVISION DATE: | |
| DRAWN BY: | PF |
| COMMISSION NO.: | 5475C |

**IB1.3**

3 OF 4










PRINT DATE: 6/29/20

REGAN YOUNG, AIA
21AI00912100


**REGAN YOUNG ENGLAND BUTERA**
REFERENDUMS · ENGINEERING · ARCHITECTURE · DESIGN

456 HIGH STREET • MT. HOLLY, NEW JERSEY 08060 USA
+1(609)265-2652/-0333FAX • 21AI00912100 • RYEBREAD.COM


**MT HOLLY FIRE INTERIM BAYS**
250 RANCOCAS MT HOLLY ROAD
MOUNT HOLLY, NEW JERSEY

TITLE: **EXISTING CONDITIONS PHOTOS**

| | |
|---|---|
| DRAWING DATE: | 01 JULY 2020 |
| REVISION DATE: | |
| DRAWN BY: | PF |
| COMMISSION NO.: | 5475C |

**IB1.4**

4 OF 4

# GENERAL NOTES

## GENERAL NOTES

1. BUILDING CODE – 2018 INTERNATIONAL BUILDING CODE (NJ EDITION)
2. FLOOR LOAD – 125/75 PSF ROOF LIVE LOAD – 30/20 PSF
3. WIND – 115 MPH EXPOSURE B, I=1.0
4. SEISMIC – SDS=0.18 SD1=0.08 USE GROUP I DESIGN CAT B SITE CLASS D
5. USE PROPERLY DESIGNED SHORING, BRACING, UNDERPINNING, ETC. AS NECESSITATED BY CONDITIONS OR AS REQUIRED. IT IS THE CONTRACTOR'S SOLE RESPONSIBILITY TO DETERMINE ERECTION PROCEDURE AND SEQUENCE TO ENSURE THE SAFETY OF THE BUILDING AND ITS COMPONENT PARTS DURING ERECTION.
6. NO FIELD REVISIONS TO ANY STRUCTURAL COMPONENTS SHALL BE MADE WITHOUT PRIOR APPROVAL BY THE ENGINEER. THIS INCLUDES (BUT IS NOT LIMITED TO) REVISIONS DUE TO MISLOCATION, MISFIT OR ANY OTHER CONSTRUCTION ERROR.
7. BRACE ALL WALLS DURING CONSTRUCTION TO PREVENT DAMAGE FROM WIND, WATER, EARTH PRESSURE AND CONSTRUCTION LOADS UNTIL ALL SUPPORTING ELEMENTS ARE IN PLACE AND ARE OF SUFFICIENT STRENGTH.
8. NO OPENINGS SHALL BE PLACED IN ANY STRUCTURAL MEMBER (OTHER THAN AS INDICATED ON APPROVED SHOP DRAWINGS) UNTIL THE LOCATION HAS BEEN APPROVED BY THE STRUCTURAL ENGINEER.
9. PROVIDE SLEEVE LAYOUTS FOR ALL PIPES AND ELECTRICAL PENETRATIONS THROUGH STRUCTURAL MEMBERS (ALL TRADES ARE INCLUDED). LAYOUTS ARE TO BE SUBMITTED TO THE ENGINEER FOR APPROVAL PRIOR TO CONSTRUCTION.
10. STRUCTURAL DRAWINGS ARE TO BE COORDINATED AND USED IN CONJUNCTION WITH THE ARCHITECTURAL, MECHANICAL, PLUMBING AND ELECTRICAL DRAWINGS. SEE MECHANICAL DRAWINGS FOR EQUIPMENT PADS, BASES, SUPPORTS AND DUCT PENETRATIONS.
11. SUPPORT AIR CONDITIONING UNITS, COMPRESSORS AND OTHER ROOF MOUNTED OR SUSPENDED EQUIPMENT ONLY ON JOISTS, TRUSSES OR BEAMS DESIGNATED FOR THAT PURPOSE. IF NO SUPPORT HAS BEEN DESIGNED (OR IF QUESTION ARISES) NOTIFY THE ARCHITECT PRIOR TO THE ERECTION OF EQUIPMENT AND BEFORE STRUCTURAL ERECTION IS COMPLETE.
12. ALL MATERIALS AND WORKMANSHIP SHALL BE IN ACCORDANCE WITH THE GOVERNING CODE AND ALL OTHER APPLICABLE FEDERAL, STATE AND LOCAL REGULATIONS.
13. WORK NOT INDICATED ON A PART OF THE DRAWINGS BUT REASONABLY IMPLIED TO BE SIMILAR TO THAT SHOWN AT CORRESPONDING PLACES, SHALL BE REPEATED.
14. CONTRACTOR SHALL VERIFY AND/OR ESTABLISH ALL EXISTING CONDITIONS AND DIMENSIONS AT THE SITE.
15. IF THE EXISTING FIELD CONDITIONS DO NOT PERMIT THE INSTALLATION OF THE WORK IN ACCORDANCE WITH THE DETAILS SHOWN, THE CONTRACTOR SHALL NOTIFY THE ARCHITECT/ENGINEER IMMEDIATELY AND PROVIDE A SKETCH OF THE CONDITION WITH HIS PROPOSED MODIFICATION OF THE DETAILS GIVEN ON THE CONTRACT DOCUMENTS.
16. CONTRACTOR SHALL PROVIDE FOR DEWATERING AS REQUIRED DURING EXCAVATION AND CONSTRUCTION.
17. WHERE ALTERATIONS INVOLVE THE EXISTING SUPPORTING STRUCTURE, THE CONTRACTOR SHALL PROVIDE SHORING AND PROTECTION REQUIRED TO INSURE THE STRUCTURAL INTEGRITY OF THE EXISTING STRUCTURE.
18. BRACING, SHEETING, SHORING, ETC. REQUIRED TO SUPPORT UTILITIES, STRUCTURE, ETC. SHALL BE DESIGNED BY A PROFESSIONAL ENGINEER ENGAGED BY THE CONTRACTOR; DETAILED SHOP DRAWINGS SHALL BE PREPARED INDICATING ALL WORK TO BE PERFORMED.
19. NO BLASTING SHALL BE PERMITTED WITHOUT WRITTEN APPROVAL.
20. THE NOTES ON THESE DRAWINGS DO NOT REPLACE THE SPECIFICATIONS. SEE SPECIFICATIONS FOR ADDITIONAL REQUIREMENTS. SHOULD A CONFLICT ARISE BETWEEN THESE NOTES AND SPECIFICATIONS, WRITTEN CLARIFICATIONS SHOULD BE REQUESTED BY THE CONTRACTOR TO THE ARCHITECT/ENGINEER. INCONSISTENCIES SHALL BE BROUGHT TO THE ATTENTION OF THE ARCHITECT/ENGINEER PRIOR TO PROCEEDING WITH THE WORK.
21. IF DURING THE PROGRESS OF THE WORK, THE CONTRACTOR MAY DISCOVER ANY INCONSISTENCY IN THE CONTRACT DOCUMENTS, THE CONTRACTOR SHALL REPORT THIS INCONSISTENCY TO THE ARCHITECT/ENGINEER. EXTRAS WILL NOT BE PERMITTED FOR CORRECTION OF DISCREPANCIES THAT COULD HAVE BEEN AVOIDED BY CAREFUL REVIEW AND THE MINOR ADJUSTMENT OF SIZE AND/OR LOCATION OF VARIOUS ITEMS.
22. SHOULD THE CONTRACTOR SEEK APPROVAL OF A PRODUCT OTHER THAN SHOWN OR WITHIN THE SPECIFICATIONS, THE CONTRACTOR SHALL FURNISH WRITTEN EVIDENCE THAT THE PROPOSED PRODUCT CONFORMS IN ALL RESPECTS TO THE SPECIFIED PRODUCT.
23. THE ENGINEER OF RECORD IS NOT AND SHALL NOT BE HELD LIABLE FOR SITE SAFETY ISSUES. THESE ARE THE RESPONSIBILITY OF THE CONTRACTOR/CONSTRUCTION MANAGER AND THEIR SUBCONTRACTORS.

## FOUNDATION

1. FOUNDATION STRUCTURE IS BASED ON THE USE OF SPREAD FOOTINGS AT A MAXIMUM SOIL PRESSURE OF 2000 POUNDS PER SQUARE FOOT.
   IF FIELD CONDITIONS DO NOT PROVIDE THIS MINIMUM VALUE, THE ARCHITECT SHOULD BE NOTIFIED IMMEDIATELY.
2. SHOULD ORGANIC SILT, CLAY POCKETS OR OTHER UNSUITABLE BEARING CONDITIONS BE ENCOUNTERED DURING EXCAVATION, NOTIFY THE ARCHITECT BEFORE CONTINUING WITH CONSTRUCTION.
3. UNLESS NOTED OTHERWISE OR REQUIRED BY CONDITIONS SHOWN ON THE DRAWINGS, EXCAVATION FOR THE FOOTINGS SHALL BE SUCH THAT THE TOP OF FOOTING MEASURES 2 FEET MINIMUM BELOW FINISHED ADJACENT GRADE.
4. THE CONTRACTOR MUST PROVIDE SURFACE DRAINAGE AND PUMPS TO PROTECT ALL EXCAVATION FROM FLOODING. FLOODING OF ANY EXCAVATION AFTER APPROVAL OF THE SUBGRADE WILL BE CAUSE FOR COMPLETE RE-PREPARTION AND RE-APPROVAL OF THE SUBGRADE.
5. THE CONTRACTOR SHALL PROVIDE ALL NECESSARY MEASURES TO PREVENT ANY WATER FROM PENETRATING ANY FOOTING OR SLAB SUBGRADE BEFORE AND AFTER THE PLACING OF CONCRETE AND UNTIL SUCH SUBGRADES ARE FULLY PROTECTED BY THE PERMANENT BUILDING STRUCTURE.
6. SLABS ON GROUND SHALL BEAR ON MECHANICALLY COMPACTED SOIL CAPABLE OF SUPPORTING 1000 POUNDS PER SQUARE FOOT. DRAINAGE FILL UNDER SLABS SHALL BE COMPACTED SAND AND GRAVEL OR CRUSHED STONE.
7. ALL ORGANIC MATERIALS, EXCESSIVELY SOFT OR LOOSE SOILS, TREES, ASPHALT, CONCRETE, DEBRIS AND OTHER DELETERIOUS MATERIALS SHOULD BE REMOVED WITHIN AND AT LEAST 5 FEET BEYOND THE BUILDING LIMIT.
8. COMPACTED STRUCTURAL FILL BENEATH ALL FOUNDATIONS, SLABS ON GRADE AND ADJACENT TO FOUNDATION WALLS SHALL BE PLACED IN LIFTS NOT EXCEEDING 8 INCHES IN LOOSE THICKNESS AND BE COMPACTED TO 95 PERCENT OF MAXIMUM DRY DENSITY PER ASTM D-1557, MODIFIED PROCTOR TEST.
9. THE EXCAVATION FOR PLACEMENT OF COMPACTED STRUCTURAL FILL SHOULD EXTEND BEYOND THE EDGE OF FOOTINGS A MINIMUM DISTANCE EQUAL TO THE DEPTH OF THE FILL.
10. EXCAVATION SHALL BE PERFORMED SO AS NOT TO DISTURB EXISTING ADJACENT BUILDINGS, STREETS AND UTILITY LINES. VERIFY LOCATION OF ALL UTILITIES PRIOR TO COMMENCEMENT OF WORK. HAND EXCAVATE AROUND UTILITIES AS REQUIRED.
11. BACKFILL SHALL BE BROUGHT UP EQUALLY ON EACH SIDE OF GRADE BEAMS, FOUNDATION WALLS, ETC.
12. DO NOT BACKFILL UNTIL CONCRETE HAS ATTAINED 75% OF SPECIFIED 28 DAY STRENGTH.
13. ALL SHEETING, SHORING AND EXCAVATION SHALL BE PERFORMED IN ACCORDANCE WITH OSHA GUIDELINES.
14. SOILS EXPOSED AT THE BASES OF ALL APPROVED FOUNDATION EXCAVATIONS SHOULD BE PROTECTED AGAINST ANY DETRIMENTAL CHANGE IN CONDITIONS SUCH AS FROST, RAIN, ETC. EXCAVATIONS SHOULD BE PROTECTED FROM RAINFALL OR FREEZING.

## CONCRETE:

1. CONCRETE SHALL HAVE A 28-DAY COMPRESSIVE STRENGTH AND DENSITY, IN ACCORDANCE WITH THE FOLLOWING:

|  | STRENGTH PSI | DENSITY PCF |
|---|---|---|
| ALL CONCRETE | 4000 | 145 |

2. SLUMP OF CONCRETE SHALL NOT EXCEED 4" UNLESS A HIGH RANGE WATER-REDUCING ADMIXTURE IS USED. THE SLUMP OF CONCRETE PRIOR TO ADDITION OF A HIGH RANGE WATER-REDUCING ADMIXTURE SHALL NOT EXCEED 4".
3. CONCRETE EXPOSED TO WEATHER SHALL BE AIR-ENTRAINED. AIR CONTENT SHALL BE BETWEEN 4 AND 8 PERCENT.
4. THE NOMINAL MAXIMUM AGGREGATE SIZE SHALL BE A MINIMUM OF 3/4".
5. THE MINIMUM PORTLAND CEMENT CONTENT PER CUBIC YARD (ASTM C150) OF ALL CONCRETE SHALL CONFORM TO THE FOLLOWING TABLE. (FLYASH NOT PERMITTED).

| SPECIFIED COMPRESSIVE STRENGTH (PSI) | MINIMUM CEMENT CONTENT (POUNDS PER CUBIC YARD) |  |
|---|---|---|
|  | NON-AIR ENTRAINED CONCRETE | AIR ENTRAINED CONCRETE |
| 4000 | 564 | 611 |

6. CONTRACTOR SHALL SUBMIT CONCRETE MIX DESIGNS FOR REVIEW WELL IN ADVANCE OF CONCRETE PLACEMENT. CONCRETE MIX DESIGN SHALL INCLUDE ALL STRENGTH DATA NECESSARY TO SHOW COMPLIANCE WITH THE PROJECT SPECIFICATIONS FOR EITHER THE TRIAL BATCH OR FIELD EXPERIENCE METHOD AND SHALL BE CERTIFIED BY AN ENGINEER REGISTERED IN THE STATE WHERE THE STRUCTURE IS LOCATED.
7. REINFORCING SHALL CONFORM TO ASTM A615, GR60, UNLESS NOTED OTHERWISE.
8. WELDED WIRE FABRIC SHALL CONFORM TO ASTM A185.
9. ALL REINFORCING SHALL BE DETAILED, FABRICATED AND PLACED, IN ACCORDANCE WITH ACI DETAILING MANUAL 1988 (SP-66).
10. ALL REINFORCING SHALL BE SUPPORTED IN FORMS, SPACED WITH NECESSARY ACCESSORIES AND SHALL BE SECURELY WIRED TOGETHER, IN ACCORDANCE WITH CRSI "MANUAL OF STANDARD PRACTICE" (1986).
11. MINIMUM CONCRETE COVER, UNLESS NOTED OTHERWISE:

|  |  |
|---|---|
| UNFORMED SURFACE IN CONTACT WITH THE GROUND. | 3 IN. |
| FORMED SURFACES EXPOSED TO EARTH OR WEATHER. |  |
| #6 BARS AND LARGER | 2 IN. |
| #5 BARS AND SMALLER | 1-1/2 IN. |
| FORMED SURFACES NOT EXPOSED TO EARTH OR WEATHER: |  |
| BEAMS, GIRDERS, AND COLUMNS | 1 1/2 IN. |
| SLABS, WALLS, AND JOISTS |  |
| #11 BARS AND SMALLER | 3/4 IN |
| #14 AND #18 BARS | 1 1/2 IN. |

12. LAP SPLICES SHALL BE IN ACCORDANCE WITH THE FOLLOWING TABLE, UNLESS NOTED OTHERWISE. WHERE CLASSES ARE NOT CALLED OUT ON DRAWINGS, USE CLASS "B" SPLICES.

|  | TENSION SPLICES (INCHES) |  |  |  | COMPRESSION SPLICES (INCHES) |
|---|---|---|---|---|---|
|  | TOP BARS |  | OTHER BARS |  |  |
| BAR SIZE | A | B | A | B |  |
| #3 | 16 | 21 | 12 | 16 | 12 |
| #4 | 21 | 28 | 16 | 21 | 15 |
| #5 | 27 | 35 | 21 | 27 | 19 |
| #6 | 35 | 46 | 27 | 35 | 23 |
| #7 | 48 | 62 | 37 | 48 | 26 |
| #8 | 63 | 82 | 48 | 63 | 30 |
| #9 | 80 | 104 | 61 | 80 | 34 |
| #10 | 101 | 131 | 78 | 101 | 38 |
| #11 | 125 | 162 | 96 | 125 | 42 |

COMPRESSION DOWEL EMBEDMENT: 22 BAR DIAMETERS
LAP WELDED WIRE FABRIC ONE SPACING OF CROSS WIRES PLUS 2".

13. BASE PLATES, ANCHOR BOLTS, SUPPORT ANGLES, ETC., BELOW GRADE SHALL BE COVERED WITH A MINIMUM OF 3" OF CONCRETE.
14. CONCRETE WORK SHALL BE SUBJECT TO QUALITY ASSURANCE TESTING AND INSPECTIONS. SEE QUALITY ASSURANCE GENERAL NOTES AND PROJECT SPECIFICATIONS.
15. CONCRETE MATERIALS AND WORKMANSHIP SHALL BE IN ACCORDANCE WITH ACI 318-89 (REVISED 1992) BUILDING CODE REQUIREMENTS FOR REINFORCED CONCRETE AND ACI 301-89 SPECIFICATIONS FOR STRUCTURAL CONCRETE FOR BUILDINGS.
16. BAR SUPPORTS IN CONTACT WITH EXPOSED SURFACES SHALL BE PLASTIC TIPPED. ALL ACCESSORIES SHALL BE GALVANIZED.
17. PROVIDE SPACERS, CHAIRS, BOLSTERS, ETC. AS REQUIRED AND NECESSARY TO ASSEMBLE, PLACE AND SUPPORT ALL REINFORCING STEEL IN PLACE. USE WIRE BAR TYPE SUPPORTS COMPLYING WITH CRSI RECOMMENDATIONS.
18. NO CALCIUM CHLORIDE SHALL BE USED IN ANY CONCRETE. NO WATER SHALL BE ADDED AT THE JOB SITE TO CONCRETE MIX.
19. THE CONTRACTOR IS RESPONSIBLE FOR THE PROPER DESIGN AND CONSTRUCTION OF ALL FORM WORK, SHORING AND RESHORING. PROVIDE COMMERCIAL FORM COATING COMPOUNDS THAT WILL NOT BOND, STAIN OR ADVERSELY AFFECT CONCRETE SURFACES.
20. ALL CONCRETE SHALL BE CONSOLIDATED IN PLACE USING INTERNAL VIBRATOR. DO NOT USE VIBRATORS TO TRANSPORT CONCRETE WITHIN FORMS.
21. PLACEMENT OF CONCRETE SHALL NOT START UNTIL THE PLACEMENT OF REINFORCING STEEL HAS BEEN APPROVED BY OWNER'S INSPECTING AGENCY.
22. BONDING AGENT SHALL BE USED WHERE NEW CONCRETE IS PLACED AGAINST EXISTING CONCRETE.
23. CONCRETE SHALL NOT BE PLACED IN WATER OR ON FROZEN GROUND.
24. COMPLETE SHOP DRAWINGS AND SCHEDULES OF ALL REINFORCING STEEL SHALL BE PREPARED BY THE CONTRACTOR AND SUBMITTED TO THE ENGINEER FOR REVIEW.
25. WELDING OF REINFORCEMENT IS NOT PERMITTED.
26. FOR ALL OPENINGS IN CONCRETE WALLS AND SLABS, PROVIDE SUPPLEMENTAL REINFORCING AROUND OPENINGS.
27. CONTROL JOINTS IN SLABS ON GRADE SHALL NOT EXCEED 20 FEET ON CENTERS NOR 15 FEET FROM ANY CORNER. CONTROL JOINTS SHALL BE SAW CUT (1/4 x SLAB DEPTH +1/4 INCH DEEP) AND FILLED WITH JOINT SEALER. CUT JOINTS AS SOON AS POSSIBLE WITHOUT FRAYING THE CONCRETE SURFACE. CONSTRUCTION JOINTS SHALL INCLUDE A ONE INCH BY TWO INCH SHEAR KEY AT MID HEIGHT OF SLAB.
28. THE FINISH TOLERANCE OF ALL SLABS SHALL BE IN ACCORDANCE WITH ACI 302 AND THAT SPECIFIED ON THE CONTRACT DOCUMENTS.
29. ANCHOR BOLTS SHALL CONFORM TO ASTM A307 UNLESS NOTED OTHERWISE.
30. LAP ALL BARS A MINIMUM OF 40 BAR DIAMETERS. LAP ALL WWF A MINIMUM OF 6 INCHES.
31. SEE ARCHITECTURAL DRAWINGS FOR EXACT LOCATIONS OF DEPRESSED SLAB AREAS, DRAINS, AND DIMENSIONS.
32. PROVIDE GALVANIZED STEEL SLEEVES WHERE PIPES PASS THROUGH EXTERIOR CONCRETE WALLS, BEAMS OR SLABS. PROVIDED PVC SLEEVES WHERE PIPES PASS THROUGH INTERIOR CONCRETE WALLS, BEAMS OR SLABS.
33. DO NOT PLACE UNDERGROUND UTILITIES OR PIPES BELOW FOOTINGS. IF ANY SUCH CONDITIONS OCCUR, NOTIFY THE ENGINEER IMMEDIATELY AND DROP THE BOTTOM OF FOOTING ELEVATION IN ACCORDANCE WITH THE TYPICAL STEP FOOTING DETAIL TO CLEAR PIPE.

## STRUCTURAL STEEL:

1. STEEL SHALL CONFORM TO THE FOLLOWING GRADES:

|  |  |
|---|---|
| WF | A992 (FY=50 KSI) |
| CHANNELS, ANGLES, PLATES, ETC. (UNO) | A36 (FY=36 KSI) |
| STRUCTURAL TUBE | A500 (Fy=46 KSI) |
| STEEL PIPE | A53 (Fy=35 KSI) |
| ANCHOR BOLTS | A307 |
| BOLTS | A325 |
| WELDING ELECTRODES | E70XX |

2. ALL STRUCTURAL STEEL SHALL BE DETAILED, FABRICATED AND ERECTED IN ACCORDANCE WITH THE AISC CODE OF STANDARD PRACTICE (1986), EXCEPT AS MODIFIED IN THESE NOTES AND THE PROJECT SPECIFICATIONS.
3. THE STEEL STRUCTURE IS A NON-SELF-SUPPORTING STEEL FRAME AND IS DEPENDENT UPON DIAPHRAGM ACTION OF THE METAL ROOF DECK AND ATTACHMENT TO THE MASONRY WALLS FOR STABILITY AND FOR RESISTANCE TO WIND AND SEISMIC FORCES. PROVIDE ALL TEMPORARY SUPPORTS REQUIRED FOR STABILITY AND FOR RESISTANCE TO WIND AND SEISMIC FORCES UNTIL THESE ELEMENTS ARE COMPLETE AND ARE CAPABLE OF PROVIDING THIS SUPPORT.
4. THE FABRICATOR IS RESPONSIBLE FOR THE DESIGN OF ALL CONNECTIONS. CONNECTIONS SHOWN ON THE STRUCTURAL DRAWINGS ARE SCHEMATIC AND ARE ONLY INTENDED TO SHOW THE RELATIONSHIP OF MEMBERS CONNECTED. CONNECTION DETAILS INDICATED ON THE DRAWINGS SHALL BE INCORPORATED INTO FABRICATOR'S CONNECTION DESIGN. SEE SPECIFICATIONS. ALL SHOP DRAWINGS SHALL BE SIGNED AND SEALED BY THE FABRICATOR'S ENGINEER WITH THE ENGINEER'S SEAL FOR THE STATE WHERE THE STRUCTURE IS LOCATED. ENGINEER'S SEAL MAY BE QUALIFIED "FOR DESIGN OF CONNECTIONS ONLY."
5. SPLICING OF STEEL MEMBERS, UNLESS SHOWN ON THE DRAWINGS, IS PROHIBITED WITHOUT WRITTEN APPROVAL OF THE ARCHITECT.
6. UNLESS NOTED OTHERWISE, BEAMS SHALL BEAR 8" MINIMUM ON CONCRETE OR MASONRY. UNLESS NOTED OTHERWISE, ANCHOR BEAMS TO MASONRY WITH TWO (2) 3/4" DIAMETER ANCHOR BOLTS WITH 4" HOOK AND 1'-4" EMBEDMENT.
7. STRUCTURAL STEEL WORK SHALL BE SUBJECT TO QUALITY ASSURANCE TESTING AND INSPECTIONS. SEE QUALITY ASSURANCE GENERAL NOTES AND PROJECT SPECIFICATIONS.
8. BOLTED CONNECTIONS SHALL USE A MINIMUM OF (2) 3/4 INCH DIAMETER HSB UNLESS NOTED OTHERWISE.
9. WELDING SHALL BE PERFORMED WITH E70XX ELECTRODES. ALL WELDING SHALL BE PERFORMED BY QUALIFIED WELDERS AND SHALL CONFORM TO THE AWS D1.1 STRUCTURAL WELDING CODE.
10. AFTER FABRICATIONS, ALL STEEL SHALL BE CLEANED OF ALL RUST, LOOSE MILL SCALE AN OTHER FOREIGN MATERIALS PRIOR TO THE APPLICATION OF TWO COATS OF SHOP PRIMER.
11. STEEL ANGLES AND PLATES ALONG WITH BOLTS AND WASHERS, IN DIRECT AND PERMANENT CONTACT WITH EXTERIOR FINISH MASONRY, AND ALL EXPOSED STRUCTURAL STEEL, SHALL BE HOT-DIPPED GALVANIZED.
12. STEEL BEAMS AND COLUMNS ADJACENT TO MASONRY SHALL HAVE ADJUSTABLE MASONRY TIES.
13. STEEL SURFACES WITHIN 4 INCHES OF FIELD WELDS SHALL BE CLEANED AND GROUND SMOOTH. AFTER WELDING COAT SURFACE WITH PRIMER/PAINT.
14. FULL DEPTH DOUBLE ANGLE END CONNECTIONS ARE TO BE USED ON ALL GIRDER AND BEAM CONNECTIONS.
15. PROVIDE A MINIMUM OF 3/8 INCH THICK FULL DEPTH THRU-PLATE FOR ALL PIPE AND TUBE COLUMN CONNECTIONS.
16. ALL CONNECTIONS SHALL BE DESIGNED FOR THE GREATER OF THE REACTIONS GIVEN ON THE FRAMING PLANS OR 1/2 THE AISC UNIFORM LOAD CAPACITY OF THE BEAM UNLESS A MORE STRINGENT CRITERIA IS GIVEN ON THE CONTRACT DOCUMENTS.
17. ALL STEEL TO OTHER METAL CONNECTIONS ARE TO BE TREATED OR PROPERLY SEPARATED TO PREVENT GALVANIC AND CORROSIVE EFFECTS.
18. FABRICATE BEAMS WITH THE NATURAL CAMBER UP.
19. ALL STEEL NOT RECEIVING FIREPROOFING SHALL BE PAINTED WITH THE FABRICATOR'S RUST INHIBITIVE PRIMER. OMIT PAINT AT SLIP CRITICAL CONNECTIONS.
20. NON-SHRINK GROUT FOR COLUMN BASE PLATES SHALL BE PREMIXED, NONMETALLIC GROUT COMPLYING WITH ASTM C-1107.
21. ALL STEEL EXPOSED TO WEATHER SHALL BE HOT DIPPED GALVANIZED.

## WOOD TIMBER

1. ALL STRUCTURAL TIMBER SHALL BE #2 (OR BETTER) STRESS GRADE LUMBER OR APPROVED EQUAL WITH THE FOLLOWING MINIMUM ALLOWABLE PROPERTIES:

   Fb=1200 PSI Fv=75PSI E=1,400,000 PSI

2. ALL 2X NOMINAL LUMBER SHALL BE KILN DRIED (KD) AND STAMPED IN ACCORDANCE WITH THE AMERICAN INSTITUTE OF TIMBER CONSTRUCTION'S "CONSTRUCTION MANUAL" SHOWING GRADE MARK.
3. ALL MICROLAM (LVL) BEAMS SHALL BE AS ENGINEERED AND MANUFACTURED BY TRUSS JOIST MACMILLAN OR APPROVED EQUAL WITH THE FOLLOWING MINIMUM ALLOWABLE PROPERTIES:

   Fb=2600 PSI Fv=285 PSI E=1,900,000 PSI

4. ALL PARALLAM (PSL) BEAMS SHALL BE AS ENGINEERED AND MANUFACTURED BY TRUSS JOIST MACMILLAN OR APPROVED EQUAL WITH THE FOLLOWING MINIMUM ALLOWABLE PROPERTIES:

   Fb=2900 PSI Fv=290 PSI E=2,000,000 PSI

5. ALL TIMBER AND TIMBER CONSTRUCTION SHALL COMPLY WITH SPECIFICATIONS AND CODES AS SPECIFIED BELOW:
   - a. AMERICAN INSTITUTE OF TIMBER CONSTRUCTION
   - b. TIMBER CONSTRUCTION MANUAL
   - c. AMERICAN FOREST AND PAPER ASSOCIATION
   - d. NATIONAL DESIGN SPECIFICATIONS FOR WOOD CONSTRUCTION
   - e. AMERICAN PLYWOOD ASSOCIATION
   - f. PLYWOOD DESIGN SPECIFICATION
   - g. AMERICAN WOOD PRESERVERS ASSOCIATION STANDARDS
6. CARPENTRY HARDWARE
   - a. BOLTS SHALL BE ASTM A-307
   - b. WASHERS SHALL BE MALLEABLE IRON WASHERS (MIW) OR HEAVY PLATE CUT WASHERS.
   - c. NAILS SHALL BE COMMON, AMERICAN MANUFACTURER ONLY.
   - d. LAG SCREWS, SHEAR PLATES; SEE NATIONAL DESIGN SPECIFICATION.
   - e. ANCHORS AND CONNECTIONS SHALL BE SIMPSON, TECO, LUMBERLOK OR ICBO APPROVED EQUAL. ALL FASTENERS SHALL BE INSTALLED PER MANUFACTURERS RECOMMENDATIONS UNLESS NOTED OTHERWISE. SUBSTITUTES SHALL BE SUBMITTED TO ENGINEER FOR APPROVAL.
7. HEADERS AT NONBEARING CONDITIONS IN WOOD FRAME WALLS SHALL BE AS FOLLOWS:

| OPENING SIZE | HEADER |
|---|---|
| UP TO 4 FEET | (2) 2 X 6 |
| UP TO 6 FEET | (2) 2 X 8 |
| UP TO 8 FEET | (2) 2 X 10 |

8. PROVIDE MINIMUM OF ONE LINE OF BLOCKING/CROSS BRIDGING FOR ALL SPANS. IN ADDITION, PROVIDE CONTINUOUS SOLID BLOCKING OR CROSS BRIDGING LINES AT 8 FEET ON CENTERS MAXIMUM, FOR ALL WOOD JOISTS/RAFTERS, ROOF TRUSSES, FLOOR TRUSSES. PROVIDE ADDITIONAL BRIDGING AS REQUIRED BY MANUFACTURER.
9. PROVIDE PRESSURE TREATED LUMBER WHERE LUMBER IS IN CONTACT WITH CONCRETE, OUTSIDE OF BUILDING, OR WITHIN 8 INCHES OF FINISHED GRADE.
10. SHEATHING (PLYWOOD OR ORIENTED STRAND BOARD) EACH SHEET SHALL BEAR THE TRADEMARK OF THE AMERICAN PLYWOOD ASSOCIATION. ALL GRADING SHALL CONFORM TO PS1-95 OR REPORT NO. NER-108. ALL PLYWOOD SHALL BE C-D INTERIOR WITH EXTERIOR GLUE OR AS NOTED ON THE DRAWINGS AND SHALL BE GROUP I OR II SPECIES. THICKNESS SHALL BE AS NOTED ON DRAWINGS. WALL SHEATHING MAY BE ORIENTED HORIZONTALLY OR VERTICALLY WITH BLOCKING. EXCEPT AS OTHERWISE NOTED, PROVIDE THE FOLLOWING MINIMUM NAILING:
    - a. PANEL EDGES – 10d AT 6 INCHES ON CENTERS.
    - b. INTERMEDIATE SUPPORT – 10d AT 12 INCHES ON CENTERS.

    GAP SHEETS 1/8 INCHES FOR 4 FOOT BY 8 FOOT SHEETS AND 1/4 INCHES FOR 8 FOOT BY 8 FOOT AND LARGER SHEETS. THE MOISTURE CONTENT SHALL NOT BE GREATER THAN 15% AT THE TIME OF SHEATHING.

## MISCELLANEOUS:

1. THESE GENERAL NOTES SUPPLEMENT THE PROJECT SPECIFICATIONS. REFER TO PROJECT SPECIFICATIONS FOR ADDITIONAL REQUIREMENTS.
2. STRUCTURAL DRAWINGS ARE INTENDED TO BE USED WITH ARCHITECTURAL AND MECHANICAL DRAWINGS. CONTRACTOR IS RESPONSIBLE FOR COORDINATING SUCH REQUIREMENTS INTO THEIR SHOP DRAWINGS AND WORK.
3. NO OPENINGS SHALL BE MADE IN ANY STRUCTURAL MEMBER WITHOUT THE WRITTEN APPROVAL OF THE PROFESSIONAL OF RECORD.
4. NO CHANGE IN SIZE OR DIMENSION OF STRUCTURAL MEMBERS SHALL BE MADE WITHOUT THE WRITTEN APPROVAL OF THE PROFESSIONAL OF RECORD.
5. OPENINGS 1'-4" AND LESS ON A SIDE ARE GENERALLY NOT SHOWN ON THE STRUCTURAL DRAWINGS. REFER TO ARCHITECTURAL AND MECHANICAL DRAWINGS FOR SUCH OPENINGS.
6. THE CONTRACTOR IS RESPONSIBLE FOR LIMITING THE AMOUNT OF CONSTRUCTION LOAD IMPOSED UPON STRUCTURAL FRAMING. CONSTRUCTION LOADS SHALL NOT EXCEED THE DESIGN CAPACITY OF THE FRAMING AT THE TIME THE LOADS ARE IMPOSED.
7. THE STRUCTURE IS DESIGNED TO FUNCTION AS A UNIT UPON COMPLETION. THE CONTRACTOR IS RESPONSIBLE FOR FURNISHING ALL TEMPORARY BRACING AND/OR SUPPORT THAT MAY BE REQUIRED AS THE RESULT OF THE CONTRACTOR'S CONSTRUCTION METHODS AND/OR SEQUENCES.
8. DO NOT SCALE THESE DRAWINGS, USE DIMENSIONS.
9. CONTRACTOR'S CONSTRUCTION AND/OR ERECTION SEQUENCES SHALL RECOGNIZE AND CONSIDER THE EFFECTS OF THERMAL MOVEMENTS OF STRUCTURAL ELEMENTS DURING THE CONSTRUCTION PERIOD.
10. THE CONTRACTOR SHALL INFORM THE PROFESSIONAL OF RECORD IN WRITING OF ANY DEVIATION FROM THE CONTRACT DOCUMENTS. THE CONTRACTOR SHALL NOT BE RELIEVED OF THE RESPONSIBILITY OF SUCH DEVIATION BY THE PROFESSIONAL OF RECORD REVIEW OF SHOP DRAWINGS, PRODUCT DATA, ETC., UNLESS THE CONTRACTOR HAS SPECIFICALLY INFORMED THE PROFESSIONAL OF RECORD OF SUCH DEVIATION AT THE TIME OF SUBMISSION, AND THE PROFESSIONAL OF RECORD HAS GIVEN WRITTEN APPROVAL TO THE SPECIFIC DEVIATION.

## QUALITY ASSURANCE:

1. THE CONTRACTOR WILL EMPLOY AND PAY FOR THE SERVICES OF AN INDEPENDENT TESTING AGENCY TO PROVIDE QUALITY ASSURANCE TESTING AND INSPECTIONS FOR WORK SPECIFIED IN THESE NOTES. THE CONTRACTOR WILL EMPLOY AND PAY FOR THE SERVICES OF AN INDEPENDENT TESTING AGENCY ACCEPTABLE TO THE OWNER TO PROVIDE QUALITY ASSURANCE TESTING AND INSPECTIONS FOR WORK IF REQUIRED BY OWNER. THE TESTING AGENCY SHALL BE LICENSED WHERE THE STRUCTURE IS LOCATED AND ALL TESTING AND INSPECTIONS SHALL BE PERFORMED UNDER THE SUPERVISION OF AN ENGINEER REGISTERED WHERE THE STRUCTURE IS LOCATED.
2. FAILURE OF QUALITY ASSURANCE TESTING AND INSPECTIONS TO DETECT ANY DEFECTIVE WORK OR MATERIAL SHALL NOT IN ANY WAY PREVENT LATER REJECTION WHEN SUCH DEFECT IS NOTED NOR SHALL IT OBLIGATE THE OWNER'S REPRESENTATIVE FOR FINAL ACCEPTANCE.
3. SEE SPECIFICATIONS FOR SPECIFIC REQUIREMENTS FOR QUALITY ASSURANCE TESTING AND INSPECTIONS.
4. THE TESTING AGENCY AND ITS REPRESENTATIVES ARE NOT AUTHORIZED TO REVOKE, ALTER, RELAX, ENLARGE OR RELEASE ANY PORTION OF THE WORK, PERFORM ANY DUTIES OF THE CONTRACTOR, OR BE A PARTY TO SCHEDULING OF WORK.
5. THE CONTRACTOR SHALL NOTIFY THE TESTING AGENCY AND THE OWNER'S REPRESENTATIVE A MINIMUM OF 24 HOURS IN ADVANCE OF ALL WORK REQUIRING QUALITY ASSURANCE TESTING AND INSPECTIONS AND ALL REASONABLE FACILITIES SHALL BE MADE AVAILABLE FOR TECHNICIANS.
6. RECORDS OF INSPECTIONS SHALL BE KEPT AVAILABLE TO THE BUILDING OFFICIAL DURING PROGRESS OF THE WORK AND FOR TWO YEARS AFTER COMPLETION OF THE PROJECT. RECORDS SHALL BE PRESERVED BY THE INDEPENDENT TESTING AGENCY.

NOTE:

ALL SUB-CONTRACTORS SHALL BE RESPONSIBLE FOR REVIEWING ALL DRAWINGS AND ALL SECTIONS OF THE SPECIFICATIONS FOR THE COORDINATION OF THEIR WORK. ANY DISCREPANCIES SHALL BE REPORTED TO THE ARCHITECT BEFORE FINALIZING THEIR BIDS. CONTRACTOR SHOULD FIELD VERIFY ALL DIMENSIONS.

PRINT DATE: 6/25/20

REGAN YOUNG, AIA
21AI00912100

REGAN YOUNG ENGLAND BUTERA
REFERENDUMS · ENGINEERING · ARCHITECTURE · DESIGN
456 HIGH STREET · MT. HOLLY, NEW JERSEY 08060 USA
+1(609)265-2652/-0333FAX · 21AI00912100 · RYEBREAD.COM

SE2
SE2 ENGINEERING, LLC.
- PROFESSIONAL ENGINEERS -
1705 BUTLER PIKE; CONSHOHOCKEN, PA. 19428
TEL: (610) 828-1550 E-MAIL: OFFICE@SE2ENG.NET

**MT HOLLY FIRE INTERIM BAYS**
300 RANCOCAS MT HOLLY ROAD
MOUNT HOLLY, NEW JERSEY

TITLE: **STRUCTURAL GENERAL NOTES**

DRAWING DATE: 01 JULY 2020
REVISION DATE:
DRAWN BY: PF
COMMISSION NO.: 5475C

S1

1 OF 3
SE2 # 20-210

## FOOTING SCHEDULE

| MARK | FOOTING INFORMATION | |
|---|---|---|
| | SIZE | REINFORCEMENT |
| F5.0 | 5'-0"x5'-0"x2'-2" | (5) #5 EACH WAY BOTT. |

## COLUMN SCHEDULE

| MARK | BASEPLATE | | COLUMN SIZE |
|---|---|---|---|
| | SIZE | HARDWARE | |
| C1 | 1¾"x24x24 | (8) 1¼"ø ANCHOR BOLTS | W10x60 |

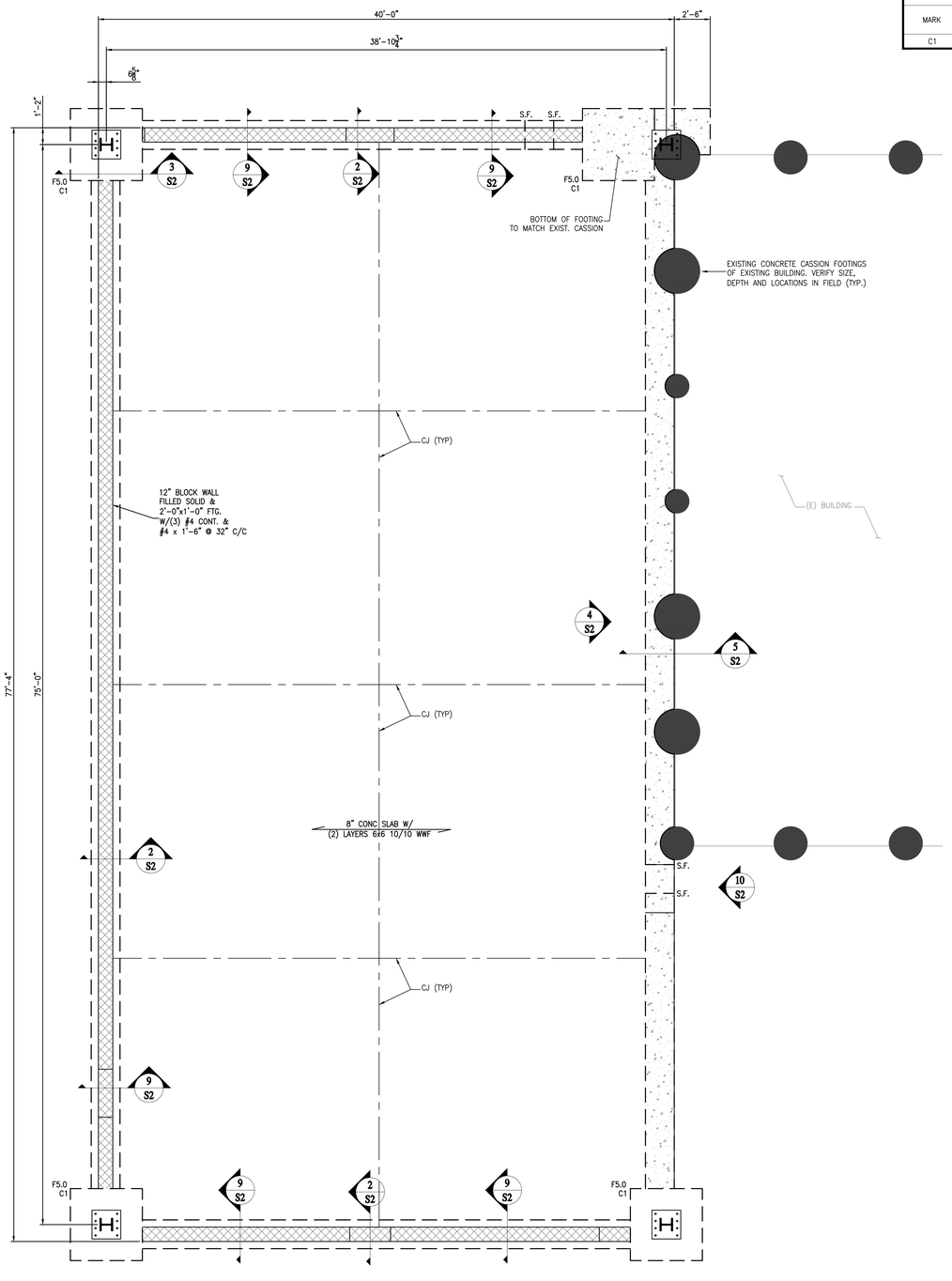


1 S2 **FOUNDATION PLAN**
SCALE: 1/4"=1'-0"
S.F. DENOTES STEP FOOTING AS REQ'D.

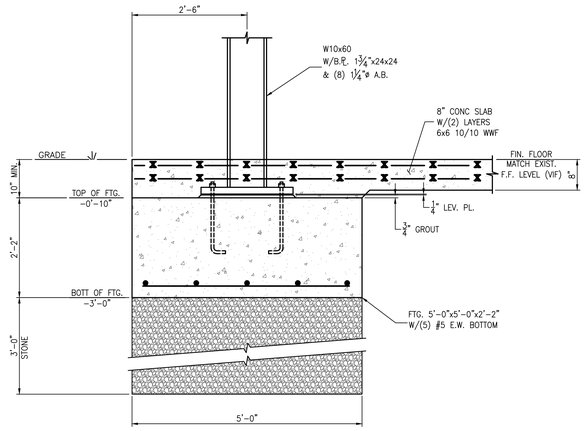


3 S2 **COLUMN/FOOTING SECTION**
SCALE: 3/4" = 1'-0"

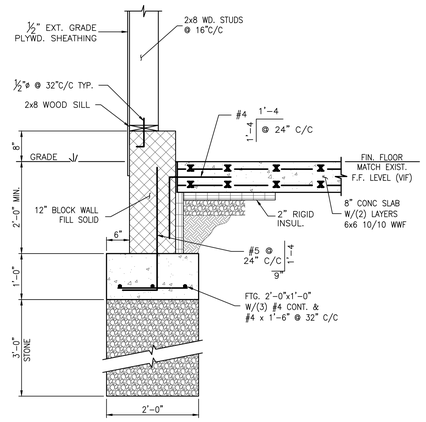


2 S2 **TYP. WALL SECTION**
SCALE: 3/4" = 1'-0"

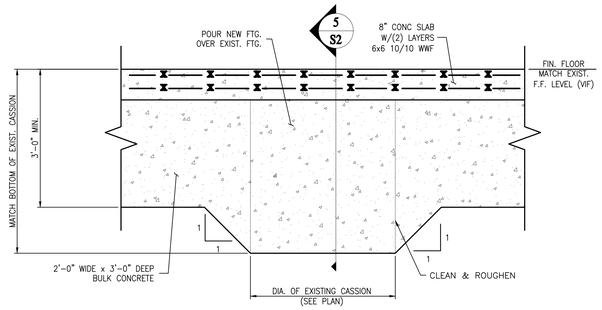


4 S2 **FOUNDATION SECTION**
SCALE: 3/4"=1'-0"
NOTE:
PROVIDE STONE PER GEOTECH ENGINEER, DO NOT EXCAVATE BELOW EXISTING CASSION/FOOTING BOTTOM.

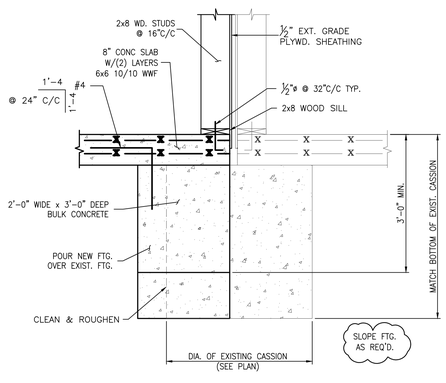


5 S2 **FOUNDATION SECTION**
SCALE: 3/4"=1'-0"
NOTE:
PROVIDE STONE PER GEOTECH ENGINEER, DO NOT EXCAVATE BELOW EXISTING CASSION/FOOTING BOTTOM.

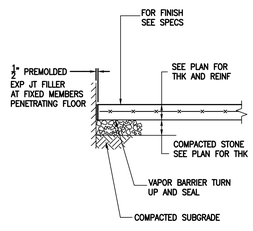


6 S2 **TYP. SLAB CONSTRUCTION**
SCALE: 3/4" = 1'-0"

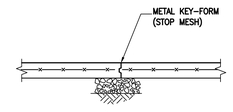


AT CONTRACTOR'S OPTION A CONSTRUCTION JOINT MAY BE SUBSTITUTED FOR A CONTROL JOINT

7 S2 **TYP SLAB CONSTRUCTION JOINT**
SCALE: 3/4" = 1'-0"
UNINDICATED AS (CJ) ON PLAN

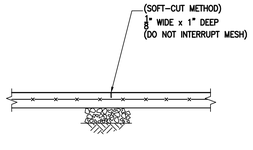


8 S2 **TYP SLAB CONTROL JOINT**
SCALE: 3/4" = 1'-0"
INDICATED AS (CNJ) ON PLAN

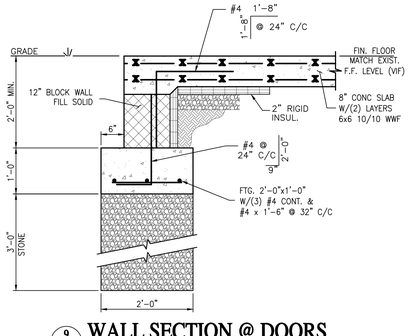


9 S2 **WALL SECTION @ DOORS**
SCALE: 3/4" = 1'-0"

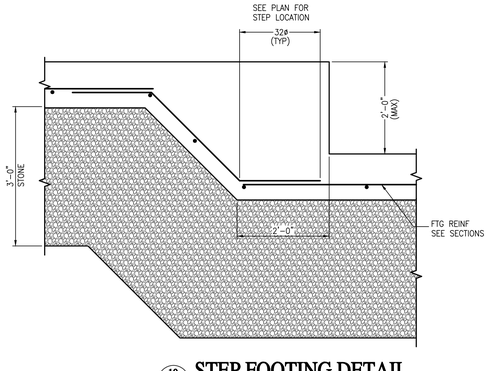


10 S2 **STEP FOOTING DETAIL**
SCALE: 3/4" = 1'-0"

PRINT DATE: 6/26/20

REGAN YOUNG, AIA
21AI00912100


REGAN YOUNG ENGLAND BUTERA
REFERENDUMS · ENGINEERING · ARCHITECTURE · DESIGN
456 HIGH STREET · MT. HOLLY, NEW JERSEY 08060 USA
+1(609)265-2552/-0333FAX · 21AI00912100 · RYEBREAD.COM

SE2 ENGINEERING, LLC.
PROFESSIONAL ENGINEERS
1705 RUTTER MILL ROAD, CONSHOHOCKEN, PA 19428
TEL: (610) 828-1550 E-MAIL: OFFICE@SE2ENG.NET


MT HOLLY FIRE INTERIM BAYS
300 RANCOCAS MT HOLLY ROAD
MOUNT HOLLY, NEW JERSEY

TITLE: FOUNDATION PLAN W/ DETAILS

DRAWING DATE: 01 JULY 2020
REVISION DATE:

DRAWN BY: PF
COMMISSION NO.: 5475C

S2

2 OF 3
SE2 # 20-210

| LINTEL SCHEDULE | | |
|---|---|---|
| MARK | TYPE | |
| L1 | (4) PCS. 2x10 + (3) ½" PLYWD. FILLERS | |
| L2 | (4) PCS. 2x12 + (3) ½" PLYWD. FILLERS | |

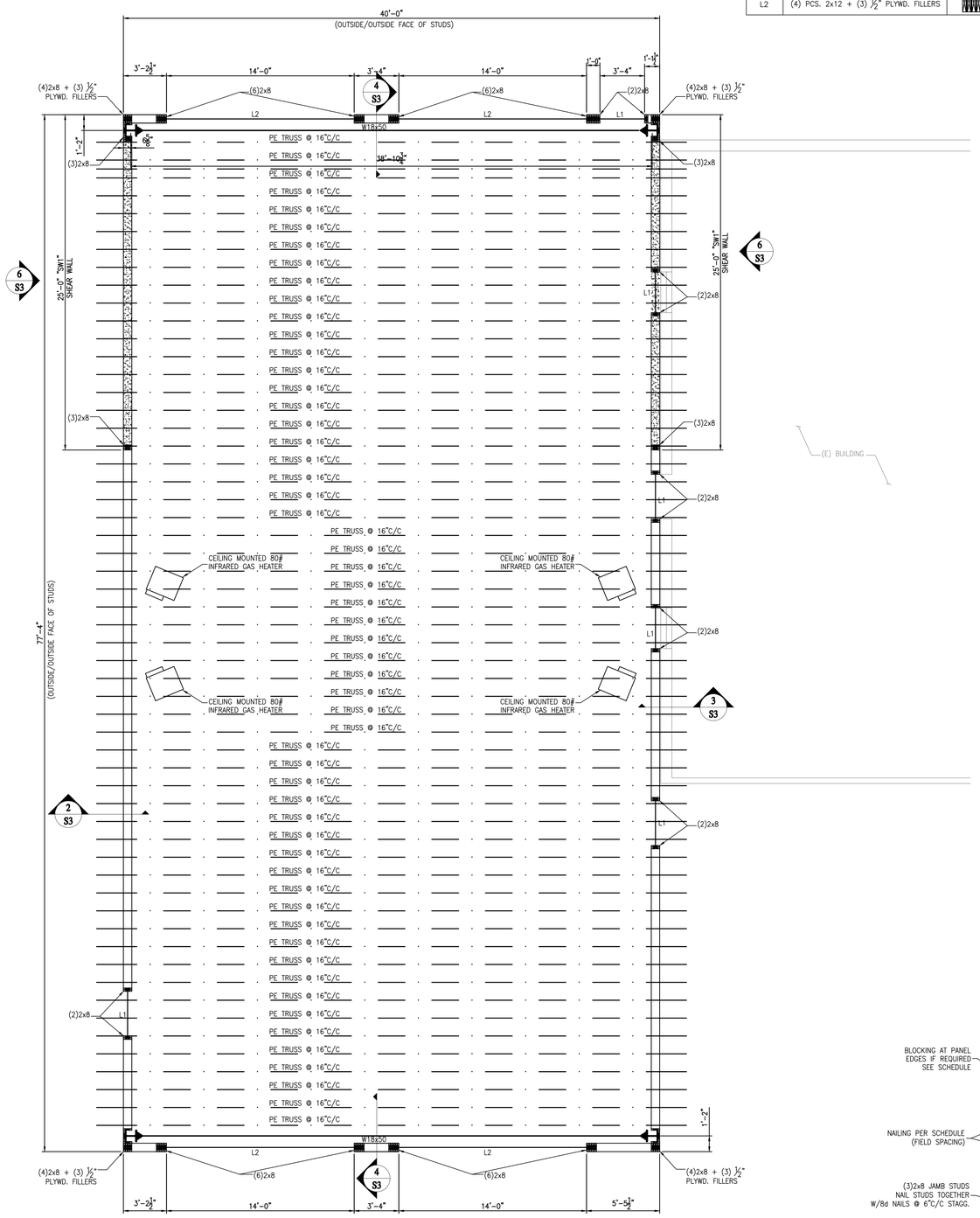


## 1 S3 ROOF FRAMING PLAN
SCALE: 1/4"=1'-0"

DENOTES FULL CAPACITY TYPE 1 MOMENT CONNECTIONS

DENOTES SHEAR WALL "SW1"

TRUSS BRACING BY TRUSS MANUFACTURE

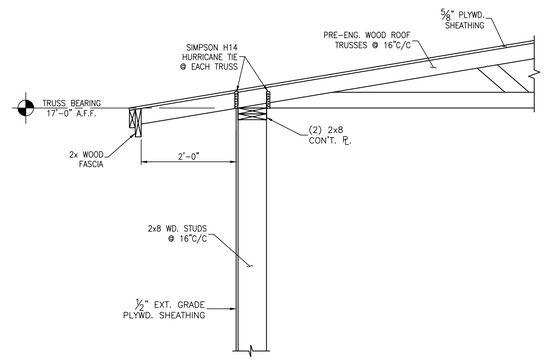


## 2 S3 WALL / TRUSS SECTION
SCALE: 3/4"=1'-0"

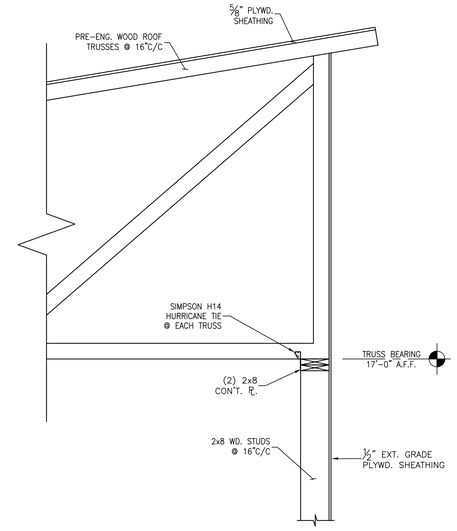


## 3 S3 WALL / TRUSS SECTION
SCALE: 3/4"=1'-0"

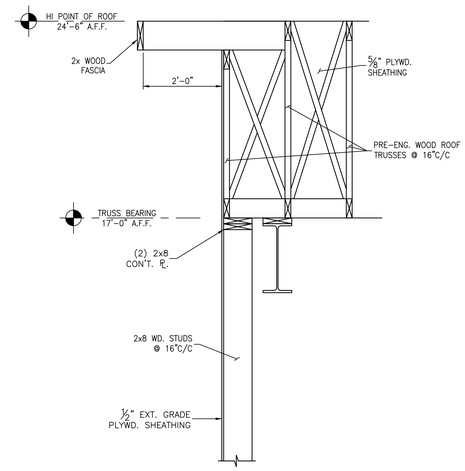


## 4 S3 WALL / TRUSS SECTION
SCALE: 3/4"=1'-0"

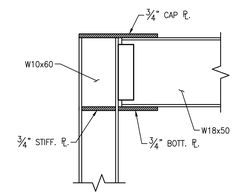


## 5 S3 MOMENT CONNECTION
SCALE: 3/4"=1'-0"

FULL CAPACITY TYPE 1 MOMENT CONNECTIONS

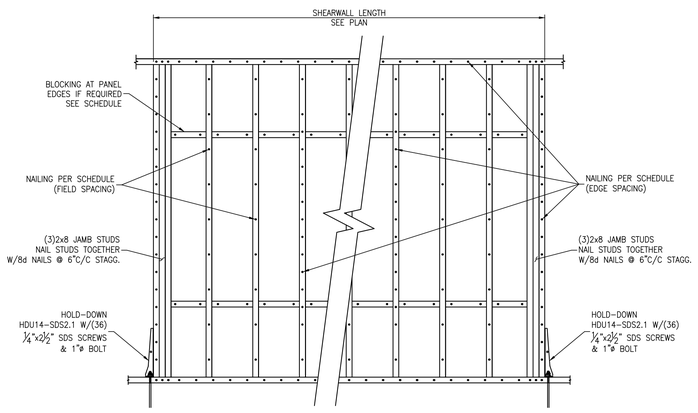


## 6 S3 TYP. SHEAR WALL DETAIL
SCALE: 3/4"=1'-0"

| SHEAR WALL SCHEDULE | | |
|---|---|---|
| LEVEL | MARK | SW1 |
| FOUNDATION – ROOF SHEATHING & ATTACHMENT | | ½" BLOCKED PLYWOOD OR OSB SHEATHING (EXTERIOR SIDE ONLY) – 10d NAILS WITH 1½" PENETRATION INTO STUD. 12"C/C SPACING IN FIELD AND 6"C/C SPACING AT EDGES |
| HOLDDOWN | HOLDDOWN @ FDN. WALL | SIMPSON HDU14-SDS2.1 HOLD DOWN W/(3) JAMB STUDS W/(36) ¼"x2½" SDS SCREWS & 1"ø BOLT INTO FDN. WALL |



PRINT DATE: 6/25/20

REGAN YOUNG, AIA
21A00912100

REGAN YOUNG ENGLAND BUTERA
REFERENDUMS · ENGINEERING · ARCHITECTURE · DESIGN
456 HIGH STREET · MT. HOLLY, NEW JERSEY 08060 USA
+1(609)265-2552/-0333FAX · 21A00912100 · RYEBREAD.COM

SE2 ENGINEERING, LLC.
PROFESSIONAL ENGINEERS
1705 RUTTER MILL ROAD, CONSHOHOCKEN, PA 19428
TEL: (610) 828-1550 EMAIL: OFFICE@SE2ENG.NET

MT HOLLY FIRE INTERIM BAYS
300 RANCOCAS MT HOLLY ROAD
MOUNT HOLLY, NEW JERSEY

TITLE: ROOF FRAMING PLAN W/ DETAILS

DRAWING DATE: 01 JULY 2020
REVISION DATE:

DRAWN BY: PF
COMMISSION NO.: 5475C

S3

3 OF 3
SE2 # 20-210

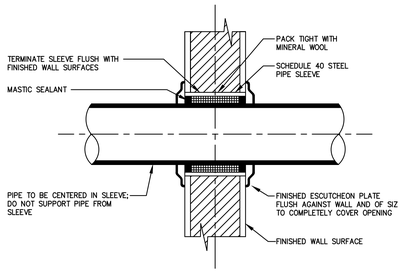


## 2 / M1 PIPE SLEEVE THROUGH INTERIOR WALL

NOT TO SCALE

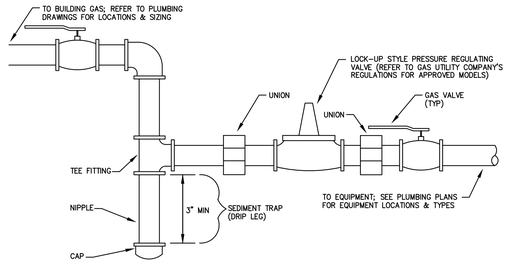


## 3 / M1 TYPICAL GAS EQUIPMENT CONNECTION

NOT TO SCALE

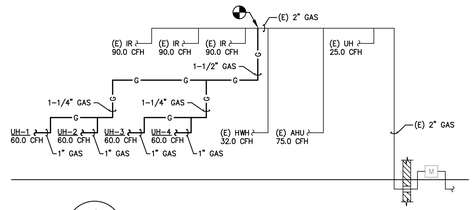


## 4 / M1 NATURAL GAS RISER DIAGRAM

NOT TO SCALE

NOTES:

1. TOTAL DEVELOPED LENGTH = 272'-3"
   ADDITIONAL LOAD UH-1, 2, 3, & 4 = 240 CFH
2. SEE DETAIL 3/M1 FOR NATURAL GAS EQUIPMENT CONNECTION.
3. ALL GAS PRV'S SHALL BE EQUIMETER LOCK-UP TYPE APPROVED BY THE LOCAL GAS UTILITY.
4. ALL EXPOSED GAS PIPE AND FITTINGS SHALL BE PAINTED WITH TWO (2) COATS OF MARINE GRADE SELF-PRIMING SILOXANE EPOXY PAINT; COLOR SHALL BE OSHA SAFETY YELLOW FS 13591 WITH BLACK LETTERING.

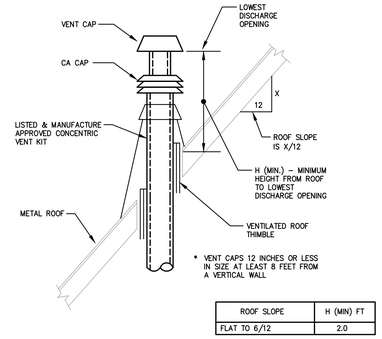


| ROOF SLOPE | H (MIN) FT |
|---|---|
| FLAT TO 6/12 | 2.0 |

## 5 / M1 GAS VENT TERMINATION DETAIL (FOR PITCHED ROOF)

NOT TO SCALE

NOTE:

PROVIDE ALL FLASHING/COUNTER FLASHING AS RECOMMENDED BY ROOFING SYSTEM MANUFACTURER.

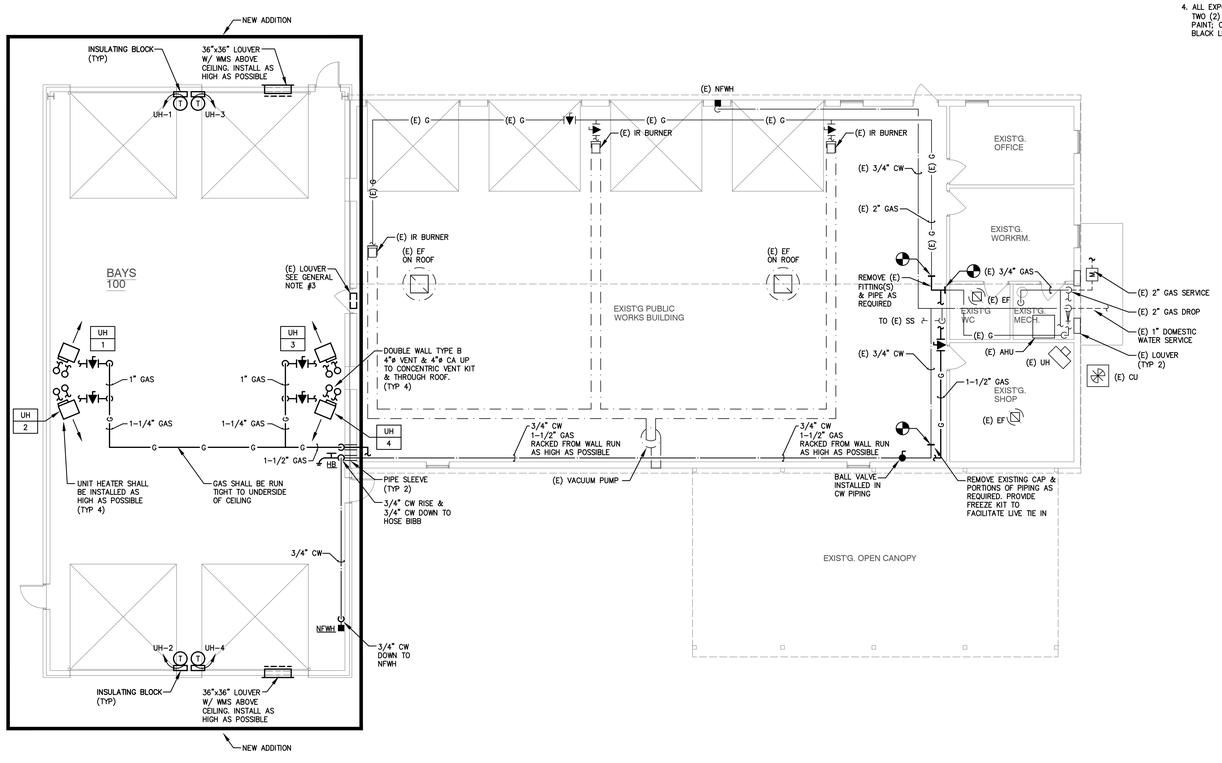


## 1 / H1 FIRST FLOOR PLAN – HVAC

SCALE 1/8" = 1'-0"

GENERAL NOTES:

1. VENTILATION FOR THIS ADDITION SHALL BE NATURAL AND PROVIDED THROUGH THE DOORS.
2. IMC 502.14.3 – THIS SECTION (MECHANICAL VENTILATION) SHALL NOT APPLY TO MOTOR VEHICLE SERVICE AREAS WHERE ENGINES ARE OPERATED INSIDE THE BUILDING ONLY FOR THE DURATION NECESSARY TO MOVE THE MOTOR VEHICLES IN AND OUT OF THE BUILDING.
3. (E) ATTIC LOUVER & APPURTENANCES SHALL BE REMOVED IN ITS ENTIRETY.

## ABBREVIATIONS

| | |
|---|---|
| AFF | ABOVE FINISH FLOOR |
| AMPS | AMPERES |
| & | AND |
| CA | COMBUSTION AIR |
| CU | CONDENSING UNIT |
| CW | COLD WATER (DOMESTIC) |
| DIA, | ø DIAMETER |
| (E) | EXISTING |
| EF | EXHAUST FAN |
| °F | FAHRENHEIT |
| FLA | FULL LOAD AMPS |
| G | NATURAL GAS |
| HWH | HOT WATER HEATER |
| IR | INFRARED |
| IWC | INCHES OF WATER COLUMN |
| LBS | POUNDS |
| MAX | MAXIMUM |
| MOCP | MAXIMUM OVER CURRENT PROTECTION |
| MBH | THOUSAND BTU PER HOUR |
| MIN | MINIMUM |
| NFWH | NON-FREEZE WALL HYDRANT |
| PRV | PRESSURE REDUCING VALVE |
| RPM | REVOLUTIONS PER MINUTE |
| SS | SERVICE SINK |
| T | THERMOSTAT (PROGRAMMABLE) |
| TYP | TYPICAL |
| UH | UNIT HEATER |
| V/PH/Hz | VOLTS/PHASE/HERTZ |
| W/ | WITH |

## SYMBOLS LIST

- X / X — EQUIPMENT DESIGNATION / ITEM NUMBER
- T — PROGRAMMABLE THERMOSTAT
- POINT OF NEW CONNECTION
- SUPPLY AIR FLOW
- HOSE BIBB W/ VACUUM BREAKER
- M — GAS METER & PRV ASSEMBLY
- BALL VALVE
- PLUG VALVE
- NON-FREEZE WALL HYDRANT
- VALVE ON VERTICAL
- PIPE TEE BRANCH TURNED DOWN
- PIPE TURNED DOWN
- PIPE TURNED DOWN
- EXISTING WORK TO REMAIN
- NEW WORK (DOUBLE-LINE & EQPT.)
- NEW WORK (SINGLE-LINE)
- EXISTING TO BE DEMOLISHED
- EXISTING DOMESTIC COLD WATER
- NEW DOMESTIC COLD WATER
- (E) G — EXISTING NATURAL GAS
- G — NEW NATURAL GAS

## UNIT HEATER SCHEDULE

UH #

| | | |
|---|---|---|
| MARK No. | | UH-1, 2, 3, & 4 |
| LOCATION | | GARAGE |
| MANUFACTURER | | REZNOR |
| MODEL & SIZE | | UDAS 60 |
| TYPE | | HORIZONTAL |
| INPUT | BTU | 60,000 |
| OUTPUT | BTU | 49,800 |
| GAS PRESSURE MIN/MAX | IWC | 5"/14" |
| EFFICIENCY | % | 83 |
| FLUE CONNECTION ø | IN | 4 |
| CA CONNECTION ø | IN | 4 |
| TEMPERATURE RISE | °F | 60 |
| AIRFLOW | CFM | 769 |
| MOTOR DATA: | | |
| FLA | AMPS | 2.4 |
| MOCP | AMPS | 15.0 |
| RPM | | 1550 |
| POWER | V/PH/HZ | 115/1/60 |
| DIMENSIONS | L x W x H | 27" x 26" x 13" |
| WEIGHT | LBS | 80 |

NOTES:

1. PROVIDE WALL MOUNTED 24/7 PROGRAMMABLE THERMOSTAT.
2. PROVIDE SINGLE DEFLECTION DISCHARGE LOUVER.
3. PROVIDE CONTROL TRANSFORMER.
4. PROVIDE TWO (2) STAGE HEATING VALVE.
5. PROVIDE CONCENTRIC VENT KIT.
6. PROVIDE SPRING TYPE VIBRATION ISOLATORS FOR INSERTION INTO HANGER ROD ASSEMBLY.
7. REZNOR IS BASIS OF DESIGN, SEE SPECIFICATIONS FOR APPROVED EQUALS.

## PLUMBING SPECIALTIES SCHEDULE

| MARK | DESCRIPTION | MANUFACTURER MODEL | REMARKS |
|---|---|---|---|
| HB | HOSE BIBB | ZURN Z-195 | BRONZE BODY, ENCASED, ANTI-SIPHON, AUTOMATIC DRAINING, INTEGRAL BACKFLOW PREVENTOR & 3/4" HOSE CONNECTION |
| NFWH | NON-FREEZE WALL HYDRANT | ZURN Z-1300-4 | BRONZE BODY, ENCASED, ANTI-SIPHON, AUTOMATIC DRAINING, INTEGRAL BACKFLOW PREVENTOR & 3/4" HOSE CONNECTION |

NOTE:

1. ZURN IS BASIS OF DESIGN , SEE SPECIFICATION FOR APPROVED EQUALS.

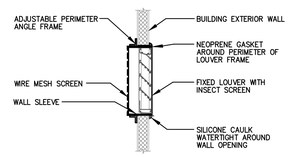


## 6 / M1 LOUVER DETAIL

NOT TO SCALE

NOTE:

1. RUSKIN IS BASIS OF DESIGN, SEE SPECIFICATION FOR APPROVED EQUALS.

PRINT DATE: 6/25/20


REGAN YOUNG ENGLAND BUTERA
REFERENDUMS · ENGINEERING · ARCHITECTURE · DESIGN
456 HIGH STREET · MT. HOLLY, NEW JERSEY 08060 USA
+1(609)265-2652/-0333FAX · 21A00912100 · RYEBREAD.COM

KELTER & GILLIGO consulting engineers
P.O. BOX 777 14 WASHINGTON RD.
PRINCETON JUNCTION NEW JERSEY 08550
Frank Tinelli P.E.
Professional Engineer
NJ 38636


MT HOLLY FIRE INTERIM BAYS
300 RANCOCAS MT HOLLY ROAD
MOUNT HOLLY, NEW JERSEY

TITLE: FIRST FLOOR PLAN - MECHANICAL

DRAWING DATE: 01 JULY 2020
REVISION DATE:

DRAWN BY: MML
COMMISSION NO.: 5475C

M1

1 OF 1

## EXISTING PANELBOARD 'LP1'

240/120V, 1ø, 3W, S/N, SURFACE, 150A MAIN CIRCUIT BREAKER

| CKT# | DESCRIPTION | LOAD KVA | CIR. BREAKER POLES | CIR. BREAKER AMP | WIRE & CONDUIT | #A #B | WIRE & CONDUIT | CIR. BREAKER AMP | CIR. BREAKER POLES | LOAD KVA | DESCRIPTION | CKT# |
|---|---|---|---|---|---|---|---|---|---|---|---|---|
| 1 | EXISTING | – | 1 | 20 | EXISTING | | EXISTING | 30 | 2 | – | EXISTING | 2 |
| 3 | EXISTING | – | 1 | 20 | EXISTING | | | | | | | 4 |
| 5 | EXISTING | – | 1 | 20 | EXISTING | | EXISTING | 20 | 1 | – | EXISTING | 6 |
| 7 | EXISTING | – | 1 | 20 | EXISTING | | – | 20 | 1 | – | EXISTING | 8 |
| 9 | EXISTING | – | 1 | 20 | EXISTING | | EXISTING | 20 | 1 | – | EXISTING | 10 |
| 11 | EXISTING | – | 1 | 20 | EXISTING | | EXISTING | 20 | 1 | – | EXISTING | 12 |
| 13 | EXISTING | – | 1 | 20 | EXISTING | | EXISTING | 20 | 1 | – | EXISTING | 14 |
| 15 | EXISTING | – | 2 | 20 | EXISTING | | EXISTING | 20 | 1 | – | EXISTING | 16 |
| 17 | | | | | | | – | 20 | 1 | – | EXISTING | 18 |
| 19 | EXISTING | – | 2 | 20 | EXISTING | | – | 20 | 1 | – | SPARE | 20 |
| 21 | | | | | | | | | | | | 22 |
| 23 | EXISTING | – | 2 | 20 | EXISTING | | – | 20 | 2 | – | SPARE | 24 |
| 25 | | | | | | | | | | | | 26 |
| * 27 | LIGHTING | 0.4 | 1 | 20 | 2 #12 & 1 #12 GRD–3/4"C | | 2 #12 & 1 #12 GRD–3/4"C | 20 | 1 | 0.5 | RECEPTACLES | 28 * |
| * 29 | EXTERIOR LTG. ADD. | 0.2 | 1 | 20 | 2 #12 & 1 #12 GRD–3/4"C | | 2 #12 & 1 #12 GRD–3/4"C | 20 | 1 | 0.2 | RECEPTACLES | 30 * |
| 31 | SPACE | | 1 | – | – | | – | – | 1 | – | SPACE | 32 |
| | SUB TOTAL KVA | | | | | | | | | – | SUB TOTAL KVA | |
| | | – | TOTAL CONNECTED LOAD | | | | | | | | | |

* PROVIDE NEW CIRCUIT BREAKER IN EXISTING SPACE, TYPE AND AIC RATING TO MATCH EXISTING IN PANELBOARD

## EXISTING PANELBOARD 'LP2'

240/120V, 1ø, 3W, S/N, SURFACE, 150A MAIN CIRCUIT BREAKER

| CKT# | DESCRIPTION | LOAD KVA | CIR. BREAKER POLES | CIR. BREAKER AMP | WIRE & CONDUIT | #A #B | WIRE & CONDUIT | CIR. BREAKER AMP | CIR. BREAKER POLES | LOAD KVA | DESCRIPTION | CKT# |
|---|---|---|---|---|---|---|---|---|---|---|---|---|
| 1 | EXISTING | – | 1 | 20 | EXISTING | | EXISTING | 20 | 1 | – | EXISTING | 2 |
| 3 | EXISTING | – | 2 | 15 | EXISTING | | EXISTING | 20 | 2 | – | EXISTING | 4 |
| 5 | | | | | | | | | | | | 6 |
| 7 | EXISTING | – | 1 | 20 | EXISTING | | – | 20 | 1 | – | EXISTING | 8 |
| 9 | EXISTING | – | 1 | 20 | EXISTING | | EXISTING | 25 | 2 | – | EXISTING | 10 |
| 11 | EXISTING | – | 1 | 20 | EXISTING | | | | | | | 12 |
| 13 | EXISTING | – | 1 | 20 | EXISTING | | EXISTING | 50 | 2 | – | EXISTING | 14 |
| 15 | EXISTING | – | 1 | 20 | EXISTING | | | | | | | 16 |
| * 17 | GARAGE DOOR | 1.20 | 1 | 20 | 2 #12 & 1 #12 GRD–3/4"C | | 2 #12 & 1 #12 GRD–3/4"C | 20 | 1 | 0.5 | RECEPTACLES | 18 * |
| * 19 | GARAGE DOOR | 1.20 | 1 | 20 | 2 #12 & 1 #12 GRD–3/4"C | | 2 #12 & 1 #12 GRD–3/4"C | 20 | 1 | 0.5 | RECEPTACLES | 20 * |
| * 21 | GARAGE DOOR | 1.20 | 1 | 20 | 2 #12 & 1 #12 GRD–3/4"C | | 2 #10 & 1 #10 GRD–3/4"C | 30 | 2 | 5.0 | DISC. SWITCH | 22 * |
| * 23 | GARAGE DOOR | 1.20 | 1 | 20 | 2 #12 & 1 #12 GRD–3/4"C | | | | | | | 24 |
| * 25 | UH–1, 2, 3, & 4 | 0.01 | 1 | 15 | 2 #12 & 1 #12 GRD–3/4"C | | 2 #10 & 1 #10 GRD–3/4"C | 30 | 2 | 5.0 | DISC. SWITCH | 26 * |
| 27 | SPACE | – | 1 | – | – | | | | | | | 28 |
| 29 | SPACE | – | 1 | – | – | | – | – | 1 | – | SPACE | 30 |
| 31 | SPACE | – | 1 | – | – | | – | – | 1 | – | SPACE | 32 |
| | SUB TOTAL KVA | | | | | | | | | – | SUB TOTAL KVA | |
| | | – | TOTAL CONNECTED LOAD | | | | | | | | | |

* PROVIDE NEW CIRCUIT BREAKER IN EXISTING SPACE, TYPE AND AIC RATING TO MATCH EXISTING IN PANELBOARD

## LIGHTING FIXTURE SCHEDULE

| ID | LAMPS | MANUF. | CAT. NO. | MOUNTING | DESCRIPTION |
|---|---|---|---|---|---|
| C | LED SPX 35 | METALUX | 8SNLED–LD5–LC–UNV–L835–CD–1–U–AYC–CHAIN/SET (ALT: LITHONIA, LIGHTOLIER OR APPROVED EQUAL) | PENDANT | 8'L LENSED INDUSTRIAL FIXTURE, MOUNT SO FIXTURE IS 15' AFF, 120V INPUT |
| C1 | LED SPX 35 | METALUX | 8SNLED–LD5–LC–UNV–EL14W–L835–CD–1–U–AYC–CHAIN/SET (ALT: LITHONIA, LIGHTOLIER OR APPROVED EQUAL) | PENDANT | 8'L LENSED INDUSTRIAL FIXTURE, MOUNT SO FIXTURE IS 15' AFF, 90 MINUTE INTEGRAL BATTERY BACKUP, 120V INPUT |
| D | 27W LED SPX 35 | MCGRAW EDISON | GWC–AF–02–LED–E1–T2 (ALT: GARDCO, HUBBELL OR APPROVED EQUAL) | WALL | 16–5/8"W X 12"D X 6.5"H HIGH WALL PACK FIXTURE, INTEGRAL COLOR AS SELECTED BY ARCHITECT, 120V INPUT |
| D1 | 27W LED SPX 35 | MCGRAW EDISON | GWC–AF–02–LED–E1–T2–XX–CBP–CEC– (ALT: GARDCO, HUBBELL OR APPROVED EQUAL) | WALL | 16–5/8"W X 12"D X 6.5"H HIGH WALL PACK FIXTURE, INTEGRAL 90 MINUTE BATTERY BACK UP, COLOR AS SELECTED BY ARCHITECT, 120V INPUT |
| X | LED | EMERGI–LITE | WW–12–DXN–R–N (ALT: SURELITE, ISOLITE OR APPROVED EQUAL) | WALL OR CEILING | DIE–CAST ALUMINUM EXIT SIGN, STENCIL FACE, 6" RED LETTERS, 90 MIN EMERG BATTERY PACK, WHITE BODY & FACE, 120V |

## SYMBOL LIST & ABBREVIATIONS

| | |
|---|---|
| | LIGHT FIXTURE – REFER TO LIGHTING FIXTURE SCHEDULE |
| | LIGHT FIXTURE WITH INTEGRAL 90 MINUTE BATTERY BACKUP – REFER TO LIGHTING FIXTURE SCHEDULE |
| | EXIT SIGN – REFER TO LIGHTING FIXTURE SCHEDULE |
| GFI | DUPLEX RECEPTACLE, 20A, 125V, 2 POLE, 3 WIRE, GROUNDED GFI INDICATES GROUND FAULT INTERRUPTION |
| | CAMERA |
| S | SINGLE POLE SWITCH |
| $S_3$ | THREE WAY SWITCH |
| $S_4$ | FOUR WAY SWITCH |
| | FIRE TRUCK BAY DOOR OPERATOR |
| | 240/120V PANELBOARD |
| | MOTOR |
| | COMBINATION STARTER CIRCUIT BREAKER |
| | WIRE & CONDUIT, CONCEALED IN CEILING OR WALL |
| | WIRE & CONDUIT, HOMERUN TO PANEL |
| | CONNECTION TO EQUIPMENT |
| AFF | ABOVE FINISHED FLOOR |
| E | EXISTING TO REMAIN |
| ER | EXISTING TO BE RELOCATED |
| EF | EXHAUST FAN |
| IR | INFRARED |
| WP | WEATHERPROOF |
| R | EXISTING TO BE REMOVED |
| UH | UNIT HEATER |

150A, 240/120V, 1–PHASE, 3–WIRE SERVICE

EXISTING PEAK DEMAND: 10.8 KVA
ADDED LOAD: 17.1 KVA

TOTAL CONNECTED LOAD: 27.9 KVA

= 116 AMPS

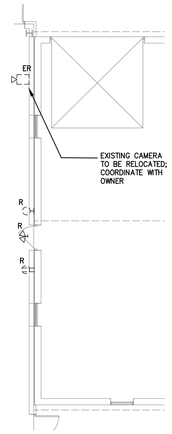


1 / E1 DEMOLITION PLAN – ELECTRICAL
SCALE 1/8" = 1'–0"

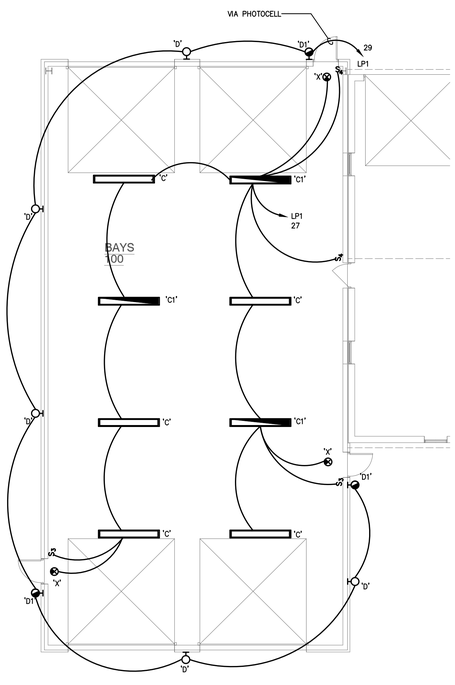


2 / E1 FLOOR PLAN – LIGHTING
SCALE 1/8" = 1'–0"

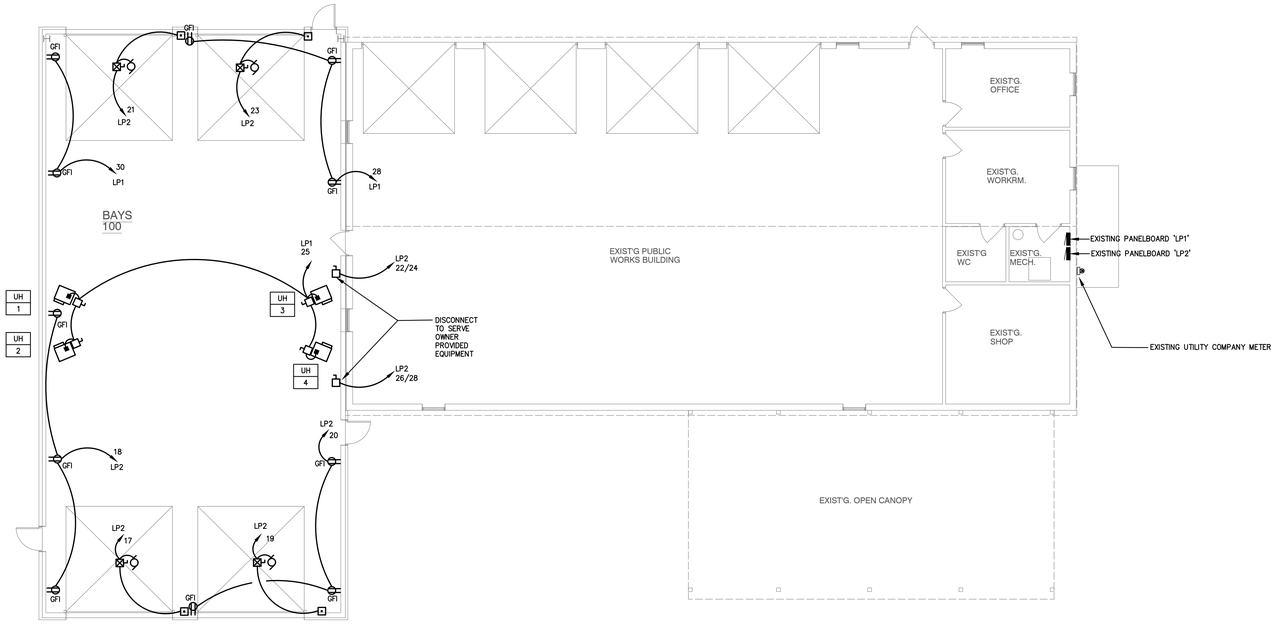


3 / E1 FLOOR PLAN – POWER
SCALE 1/8" = 1'–0"

PRINT DATE: 6/29/20


REGAN YOUNG ENGLAND BUTERA
REFERENDUMS · ENGINEERING · ARCHITECTURE · DESIGN
456 HIGH STREET · MT. HOLLY, NEW JERSEY 08060 USA
+1(609)265-2652/-0333FAX · 21A00912100 · RYEBREAD.COM

KELTER & GILLIGO
consulting engineers
P.O. BOX 777 14 WASHINGTON RD.
PRINCETON JUNCTION NEW JERSEY 08550
Frank Tindall, P.E.
Professional Engineer
NJ 38656


**MT HOLLY FIRE INTERIM BAYS**
300 RANCOCAS MT HOLLY ROAD
MOUNT HOLLY, NEW JERSEY

TITLE: FLOOR PLANS, SYMBOL LIST & SCHEDULES - ELECTRICAL

DRAWING DATE: **01 JULY 2020**
REVISION DATE:

DRAWN BY:

COMMISSION NO.: **5475C**

# E1

1 OF 1