HVAC BASIC PIPING SYMBOLS
(NOT ALL SYMBOLS ARE NECESSARILY USED ON THIS PROJECT)

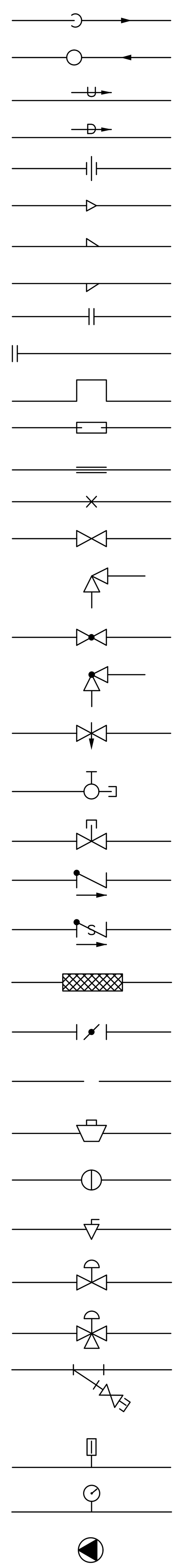

- PIPE DROP
- PIPE RISE
- PITCH UP IN DIRECTION OF FLOW
- PITCH DOWN IN DIRECTION OF FLOW
- UNION
- CONCENTRIC REDUCER
- ECCENTRIC REDUCER – FLAT BOTTOM
- ECCENTRIC REDUCER – FLAT TOP
- FLANGED CONNECTION
- FLANGED END
- EXPANSION LOOP
- PIPE EXPANSION JOINT
- PIPE ALIGNMENT GUIDE
- PIPE ANCHOR
- GATE OR SHUTOFF VALVE (AS NOTED)
- ANGLE VALVE
- GLOBE VALVE
- ANGLE GLOBE VALVE
- NEEDLE VALVE COCK
- DRAIN VALVE
- LOCK SHIELD VALVE
- CHECK VALVE, SWING OR LIFT
- SILENT CHECK VALVE
- FLEXIBLE CONNECTOR
- BUTTERFLY VALVE
- BALL VALVE
- SQUARE HEAD COCK
- CALIBRATED BALANCING VALVE
- PLUG VALVE (TYPE AS NOTED)
- AUTOMATIC CONTROL VALVE
- THREE-WAY AUTOMATIC CONTROL VALVE
- "Y" TYPE STRAINER W/BLOW OFF VALVE
- THERMOMETER AND WELL
- PRESSURE GAUGE
- PUMP

HVAC BASIC DUCTWORK SYMBOLS
(NOT ALL SYMBOLS ARE NECESSARILY USED ON THIS PROJECT)

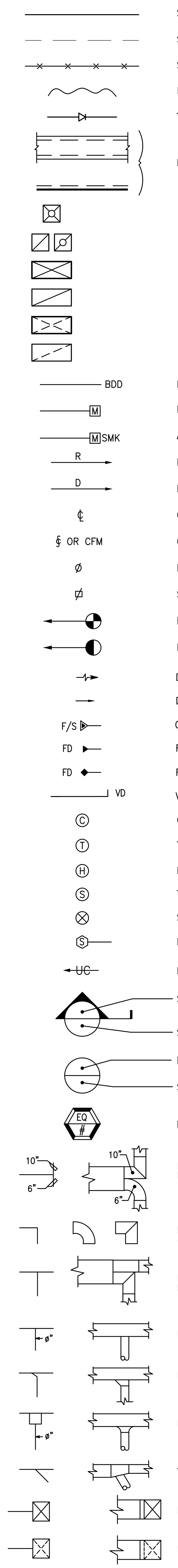

- SINGLE LINE DUCTWORK OR EQUIPMENT – NEW
- SINGLE LINE DUCTWORK OR EQUIPMENT – EXISTING
- SINGLE LINE DUCTWORK OR EQUIPMENT – DEMOLITION
- FLEXIBLE DUCT
- TRANSITION
- DUCTWORK WITH ACOUSTIC LINING
- CEILING DIFFUSER
- RETURN/EXHAUST GRILLE
- SUPPLY AIR DUCT UP
- RETURN AIR DUCT UP
- SUPPLY AIR DUCT DN
- RETURN AIR DUCT DN
- BACK DRAFT DAMPER
- MOTORIZED DAMPER
- AUTOMATIC SMOKE DAMPER
- RISE IN DUCTWORK (IN DIRECTION OF AIR FLOW)
- DROP IN DUCTWORK (IN DIRECTION OF AIR FLOW)
- CENTER LINE
- CUBIC FEET PER MINUTE
- DIAMETER
- SQUARE FEET
- POINT OF CONNECTION
- POINT OF DISCONNECTION
- DIRECTION OF RETURN AIR
- DIRECTION OF SUPPLY AIR
- COMBINATION FIRE & SMOKE DAMPER W/ ACCESS DOOR
- FIRE DAMPER (WALL) W/ ACCESS DOOR
- FIRE DAMPER (CEILING) W/ ACCESS DOOR
- VOLUME DAMPER
- CARBON DIOXIDE SENSOR
- THERMOSTAT
- HUMIDISTAT
- TEMPERATURE SENSOR
- STEAM TRAP
- DUCT SMOKE DETECTOR
- DOOR UNDERCUT
- SECTION DESIGNATION
- SHEET NO. WHERE SECTION IS SHOWN
- DETAIL DESIGNATION
- SHEET NO. WHERE DETAIL IS SHOWN
- MECHANICAL EQUIPMENT TAG
- PROPORTIONAL SPLIT OR EQUAL SPLIT. RADIUS ELBOWS (REFER TO SPECIFICATIONS)
- RADIUS ELBOWS OR SQUARE ELBOWS w/TURNING VANES (REFER TO SPECIFICATIONS)
- PROPORTIONAL SPLIT OR EQUAL SPLIT. RADIUS ELBOWS (REFER TO SPECIFICATIONS)
- ROUND BRANCH TAKE-OFF w/SPIN FITTING
- BRANCH TAKE-OFF w/HEEL
- ROUND BRANCH TAKE-OFF w/BELLMOUTH
- TEE-ON-TAPER (DUST COLLECTION ONLY)
- DUCT ELBOW UP
- DUCT ELBOW DN

HVAC ABBREVIATIONS
(NOT ALL ABBREVIATIONS ARE NECESSARILY USED ON THIS PROJECT)

AAV	AUTOMATIC AIR VENT
AC	AIR CONDITIONING
ACU	AIR CONDITIONING UNIT
AD	ACCESS DOOR
AFF	ABOVE FINISHED FLOOR
AHU	AIR HANDLING UNIT
BCU	BLOWER COIL UNIT
BHP	BRAKE HORSEPOWER
BR	BOTTOM REGISTER
BT	BOTTOM THROAT
BTU	BRITISH THERMAL UNIT
BTUH	BTU PER HOUR
CD	CEILING DIFFUSER
CFM	CUBIC FEET PER MINUTE
CG	CEILING GRILLE
CLG	CEILING
CO	CLEANOUT
COND	CONDENSATE
CR	CEILING REGISTER
CUH	CABINET UNIT HEATER
CV	CONSTANT VOLUME
DB	DRY BULB
DDC	DIRECT DIGITAL CONTROL
DIAM	DIAMETER
DMPR	DAMPER
DN	DOWN
DX	DIRECT EXPANSION
(E)	EXISTING TO REMAIN
(ER)	EXISTING TO BE REMOVED
(ERR)	EXISTING TO BE REMOVED & RELOCATED
EA	EXHAUST AIR
EAT	ENTERING AIR TEMPERATURE
EDB	ENTERING DRY BULB TEMPERATURE
EF	EXHAUST FAN
EG	EXHAUST GRILLE
EL	ELEVATION
EMS	ENERGY MANAGEMENT SYSTEM
ER	EXHAUST REGISTER
ESP	EXTERNAL STATIC PRESSURE
EWB	ENTERING WET BULB
EWT	ENTERING WATER TEMPERATURE
EXH	EXHAUST
°F	DEGREES FAHRENHEIT
FA	FREE AREA (SQ.FT.)
FC	FLEXIBLE CONNECTION
FCU	FAN COIL UNIT
FD	FIRE DAMPER
FIN FL	FINISHED FLOOR
FLA	FULL LOAD AMPERES
FPM	FEET PER MINUTE
GAL	GALLON
GPH	GALLONS PER HOUR
GPM	GALLONS PER MINUTE
GRD	GRILLES, REGISTERS & DIFFUSERS
HT	HEIGHT
HP	HORSEPOWER
HR	HOUR
HV	HEATING AND VENTILATING
HX	HEAT EXCHANGER
HZ	HERTZ (FREQUENCY)
IN.	INCH OR INCHES
LAT	LEAVING AIR TEMPERATURE
LD	LINEAR DIFFUSER
LF	LINEAR FEET
LWB	LEAVING WET BULB TEMPERATURE
LWT	LEAVING WATER TEMPERATURE
MBH	THOUSAND BTU PER HOUR
MER	MECHANICAL EQUIPMENT ROOM
MIN	MINIMUM
MOD	MOTOR OPERATED DAMPER
(N)	NEW
NC	NORMALLY CLOSED
NIC	NOT IN CONTRACT
NO	NORMALLY OPEN
NO.	NUMBER
NTS	NOT TO SCALE
OA	OUTSIDE AIR
OAI	OUTSIDE AIR INTAKE
OED	OPEN END DUCT
PSI	POUNDS PER SQUARE INCH
PSIA	PSI ABSOLUTE
PSIG	PSI GAUGE
RA	RETURN AIR
(RE)	RELOCATED EXISTING
RF	RETURN FAN
RG	RETURN GRILLE
RH	RELATIVE HUMIDITY
RHC	REHEAT COIL
RLA	RUNNING LOAD AMPS
RPM	REVOLUTIONS PER MINUTE
RR	RETURN REGISTER
(RRO)	EXISTING TO BE REMOVED AND RETURN TO OWNER
RTU	ROOFTOP AIR HANDLING UNIT
SA	SUPPLY AIR
SD	SMOKE DAMPER
SF	SUPPLY FAN
SP	STATIC PRESSURE
SQFT	SQUARE FEET
SPEC	SPECIFICATION
TDH	TOTAL DYNAMIC HEAD
TEMP	TEMPERATURE
TG	TRANSFER GRILLE
TR	TOP REGISTER
TRANS	TRANSITION
T-STAT	THERMOSTAT
TYP	TYPICAL
UH	UNIT HEATER
VD	VOLUME DAMPER
VFD	VARIABLE FREQUENCY DRIVE
VAV	VARIABLE AIR VOLUME
VIV	VARIABLE INLET VANES
W	WIDTH
W/	WITH
WB	WET BULB
W.C.	WATER COLUMN
W.G.	WATER GAUGE
WH	WATER HEATER
WMS	WIRE MESH SCREEN

MECHANICAL NOTES

1. PRIOR TO SUBMITTING A BID THE CONTRACTOR SHALL EXAMINE ALL DRAWINGS AND SPECIFICATIONS AND VISIT THE SITE TO BECOME ACQUAINTED WITH THE CONSTRUCTION AND THE EXTENT OF THE WORK. NO EQUIPMENT OR MATERIAL IS TO BE ORDERED OR FABRICATED PRIOR TO FIELD VERIFICATION OF ALL MEASUREMENTS, CLEARANCES, POTENTIAL CONFLICTS WITH EXISTING CONDITIONS OR THAT OF OTHER TRADES ON THE JOB.
2. CONTRACTOR SHALL PROVIDE ALL MATERIALS AND EQUIPMENT AND PERFORM ALL LABOR REQUIRED TO INSTALL COMPLETE AND OPERABLE MECHANICAL SYSTEMS AS INDICATED ON THE DRAWINGS, AS SPECIFIED AND AS REQUIRED BY CODE, WHETHER SPECIFIED OR IMPLIED.
3. CONTRACTOR SHALL VISIT THE JOB PRIOR TO SUBMITTING A BID.
4. ALL WORK SHALL BE PERFORMED IN ACCORDANCE WITH THE LATEST APPLICABLE INTERNATIONAL BUILDING CODE, MECHANICAL CODE, FUEL GAS CODE, PLUMBING CODE, NEC CODE AND ALL OTHER STATE AND LOCAL AUTHORITIES HAVING JURISDICTION.
5. CONTRACTOR SHALL GIVE ALL NOTICES, OBTAIN AND PAY FOR ALL PERMITS, DEPOSITS AND FEES NECESSARY.
6. DO NOT SCALE THE DRAWINGS FOR EXACT DIMENSIONS. THE DESIGN DRAWINGS ARE DIAGRAMMATIC AND INDICATE THE GENERAL LAYOUT AND CONNECTIONS. CONTRACTOR SHALL VERIFY ALL CONDITIONS, DIMENSIONS, ETC. AT THE JOB SITE.
7. CONTRACTOR SHALL REVIEW THE WORK OF OTHER TRADES TO PREVENT INTERFERENCE BETWEEN BEAMS, STRUCTURES, PIPING, LIGHTING FIXTURES ETC. BEFORE PROCEEDING WITH NEW WORK.
8. CONTRACTOR SHALL GUARANTEE THE ENTIRE JOB AGAINST DEFECTS IN WORKMANSHIP AND MATERIALS FOR A PERIOD OF ONE (1) YEAR FROM THE DATE OF FINAL ACCEPTANCE. THIS GUARANTEE SHALL BE BINDING REGARDLESS OF MANUFACTURER'S GUARANTEE AND CONTRACTOR SHALL REMOVE AND REPLACE ALL DEFECTIVE MATERIAL REGARDLESS OF CAUSE (EXCEPT FOR DEFECTS TRACEABLE TO IMPROPER MAINTENANCE OR MALICIOUS DESTRUCTION OCCURRING AFTER THE SYSTEM HAS BEEN TURNED OVER).
9. ALL MATERIALS USED ANYWHERE IN THE WORK SHALL HAVE NFPA RATING AS FOLLOWS:

   A. FLAME SPREAD– NOT OVER 25
   B. SMOKE DEVELOPED– NOT OVER 50
   C. FUEL CONTRIBUTED– NOT OVER 25
   ALL MATERIALS SHALL BE "SELF-EXTINGUISHING"
10. CONTRACTOR SHALL SUBMIT 1/4" SCALE SHEET METAL SHOP DRAWINGS FOR APPROVAL PRIOR TO FABRICATION. REFER TO SPECIFICATIONS FOR ADDITIONAL REQUIREMENTS.
11. SUBMIT TO THE ARCHITECT FOR APPROVAL, SPECIFICATION SHEETS OF ALL EQUIPMENT SUPPLIED OR INSTALLED, INCLUDING BUT NOT LIMITED TO THE FOLLOWING:

    A. AIR CONDITIONING UNITS
    B. GRILLES, REGISTERS, AND DIFFUSERS
    C. CONTROLS
    D. PIPING
    E. INSULATION
    F. FANS
12. ALL MECHANICAL EQUIPMENT AND APPLIANCES INSTALLED SHALL BEAR THE LABEL OF AN APPROVED AGENCY.
13. EQUIPMENT AND MATERIALS ARE SPECIFIED TO ESTABLISH A STANDARD OF QUALITY. ALL MATERIALS AND EQUIPMENT USED FOR THIS CONTRACT SHALL BE NEW AND UNUSED AND OF THE LATEST MODEL OR DESIGN AVAILABLE.
14. ALL TESTS SHALL BE COMPLETED BEFORE ANY MECHANICAL EQUIPMENT INSULATION IS APPLIED.
15. CONTRACTOR SHALL PROVIDE 1-INCH THICK (R-5) FOAM BOARD INSULATION PAINTED TO MATCH THE ROOM'S FINISH FOR ALL THERMOSTAT'S MOUNTED ON MASONRY WALLS.
16. THE CONTRACTOR SHALL FURNISH AND INSTALL ALL STRUCTURAL STEEL, SUPPORTS, BRACES, HANGERS, ETC., REQUIRED FOR HIS CONTRACT UNLESS OTHERWISE NOTED. CONTRACTOR SHALL COORDINATE ALL EQUIPMENT SUPPORT LOCATION AND INSTALLATION WITH ROOFING AND STRUCTURAL CONTRACTORS.
17. ALL DUCT SIZES SHOWN ARE INSIDE CLEAR.
18. MAXIMUM ALLOWABLE LENGTH FOR FLEXIBLE DUCT IS SIX (6') FEET.
19. MECHANICAL CONTRACTOR IS RESPONSIBLE FOR ALL CUTTING AND PATCHING EITHER ENGAGING HIS OWN GENERAL SUBCONTRACTOR OR ONE QUALIFIED BY THE OWNER.
20. CONTRACTOR SHALL INFORM THE ENGINEER OF ANY QUESTIONS OR DISCREPANCIES PRIOR TO PRECURSOR AND/OR FABRICATION OF ANY MATERIALS AND INSTALLATION.
21. INSTALL ALL EQUIPMENT IN ACCORDANCE TO THE MANUFACTURER'S WRITTEN GUIDELINES.
22. MECHANICAL CONTRACTOR SHALL BE RESPONSIBLE FOR ALL CONNECTIONS, SUPPORTS, TERMINATIONS & ACCESSORIES ASSOCIATED WITH AIR HANDLING UNITS, FANS, ETC.
23. MECHANICAL CONTRACTOR SHALL COORDINATE WITH ELECTRICAL CONTRACTOR WHO WILL PROVIDE POWER WIRING TO ALL MECHANICAL EQUIPMENT. MECHANICAL CONTRACTOR SHALL PROVIDE ALL CONTROL AND INTERLOCK WIRING AND ALL THERMOSTATS AND ACCESSORIES.
24. SUPPORT ALL EQUIPMENT, PIPING AND DUCTWORK WITH VIBRATION ISOLATION HANGERS AS REQUIRED TO PROVIDE A VIBRATION FREE INSTALLATION.
25. ALL EXTERIOR WALL OPENINGS SHALL BE SLEEVED, PROPERLY CAULKED AND SEALED WITH A HIGH QUALITY SEALANT TO PREVENT INFILTRATION OF MOISTURE AND OUTSIDE AIR.
26. PROVIDE VOLUME DAMPERS AT ALL DUCT BRANCHES AND RUNOUTS. PROVIDE OPPOSED BLADE VOLUME DAMPERS AT ALL REGISTERS, GRILLES AND DIFFUSER NECKS IN SUPPLY, RETURN AND EXHAUST DUCTWORK WHETHER SHOWN ON DRAWINGS OR NOT.
27. PROVIDE AT MINIMUM 10 GAUGE STEEL SLEEVES FOR ALL DUCT PENETRATIONS THROUGH FIRE WALLS, FLOORS AND PARTITIONS. PROVIDE PIPE SLEEVES FOR ALL MECHANICAL PIPING PENETRATING THROUGH FIRE WALLS, FLOORS AND PARTITIONS. SEAL ALL ANNULAR SPACE BETWEEN SLEEVES AND DUCTWORK OR PIPING WITH A FIRE BARRIER MATERIAL.
28. PROVIDE FLEXIBLE CONNECTIONS ON ALL DUCTS AND PIPING CONNECTIONS TO ANY MOTOR DRIVEN MECHANICAL EQUIPMENT (I.E. FANS, AIR HANDLERS, PUMPS, ETC.) INSTALL FLEXIBLE COPPER GROUNDING STRAPS ACROSS ALL FLEXIBLE CONNECTIONS.
29. THE INSIDE OF ALL DUCTWORK VISIBLE THROUGH A GRILLE OR DIFFUSER SHALL BE PAINTED FLAT BLACK.
30. ACCESS PANELS SHALL BE PROVIDED TO SERVICE ALL VALVES, DAMPERS, HEATERS, CONCEALED MECHANICAL EQUIPMENT, TRAPS, CLEANOUTS AND DISCHARGE SIDE OF ELECTRIC HEATERS.
31. FINAL LOCATIONS FOR MOUNTING ALL THERMOSTATS SHALL BE COORDINATED WITH THE ENGINEER PRIOR TO INSTALLING ANY CONTROL WORK. ALL COMMON AREA THERMOSTATS SHALL BE EQUIPPED WITH A LOCKING COVERS. MOUNT ALL THERMOSTATS TO COMPLY WITH ADA REQUIREMENTS.
32. UPON COMPLETION OF THE WORK, REMOVE ALL EXCESS MATERIAL, DEBRIS, TOOLS AND EQUIPMENT FROM THE SITE, AND LEAVE THE PREMISES IN A BROOM CLEAN CONDITION.
33. CONTRACTOR SHALL PROVIDE THREE (3) COMPLETE SETS OF BOUND OPERATING AND MAINTENANCE INSTRUCTIONS. CONTRACTOR SHALL INSTRUCT THE OWNER OR HIS AGENT WITH REGARD TO THE PROPER USE OF THE SYSTEM UNTIL SUCH INSTRUCTION IS COMPLETE TO THE OWNER'S SATISFACTION.
34. TESTING, ADJUSTING, AND BALANCING AGENCY SHALL BE A MEMBER OF THE ASSOCIATED AIR BALANCE COUNCIL (AABC) OR THE NATIONAL ENVIRONMENTAL BALANCING BUREAU (NEBB). TESTING, ADJUSTING, AND BALANCING SHALL BE PERFORMED IN ACCORDANCE WITH THE AABC OR NEBB STANDARDS.
35. CONTRACTOR SHALL ENSURE THAT ALL MECHANICAL DEVICES WILL BE INSTALLED IN LOCATIONS WHICH AFFORD ACCESSIBILITY FOR MAINTENANCE AND REPAIR. COORDINATE INSTALLATION AMONG ALL TRADES TO AVOID INTERFERENCES AND LOCATE EQUIPMENT TO PROVIDE CLEARANCES WHICH EXCEED THOSE RECOMMENDED BY THE EQUIPMENT MANUFACTURER.
36. CONTRACTOR SHALL TAKE ALL NECESSARY PRECAUTIONS TO ENSURE SAFETY OF EXISTING STRUCTURE.
37. THERMOSTAT WIRING SHALL BE INSTALLED IN CONCEALED SPACE, WALL OR CHASE – COORDINATE WITH THE OWNER REPRESENTATIVE.
38. THE CONTRACTOR SHALL BE RESPONSIBLE FOR ALL CONSTRUCTION SCHEDULING AND ASSOCIATED HOISTING STAGING AND ERECTING OF MATERIALS. ALL ELEMENTS OF THE EXISTING PROPERTY SHALL BE PROTECTED AGAINST DAMAGE RESULTING FROM THESE ACTIVITIES.
39. ENGAGE A FACTORY-AUTHORIZED SERVICE REPRESENTATIVE TO PERFORM STARTUP SERVICES. COMPLETE INSTALLATION AND STARTUP CHECKS SHALL BE ACCORDING TO MANUFACTURER'S WRITTEN INSTRUCTIONS AND STARTUP REPORTS SHALL BE PROVIDED TO ARCHITECT/ENGINEER FOLLOWING COMPLETION. STARTUP SHALL BE PROVIDED FOR ALL EQUIPMENT SUPPLIED OR INSTALLED, INCLUDING BUT NOT LIMITED TO THE FOLLOWING:

    A. AIR CONDITIONING UNITS
    B. HEATERS
    C. PUMPS
    D. FANS
    E. BOILERS
    F. CHILLERS
    G. CONDENSERS & HEAT PUMPS
    H. CONTROLS

GENERAL FIRESTOPPING NOTE

CONTRACTOR SHALL BE RESPONSIBLE FOR MAINTAINING OR EXCEEDING WALL/CEILING/FLOOR ASSEMBLY RATINGS FOR ALL PENETRATIONS. CONTRACTOR SHALL VERIFY LOCATION AND RATING OF ALL FIRE ASSEMBLIES AND PROVIDE INTUMESCENT COLLARS AT ALL PENETRATIONS AND FIRE RATED CAULKING AS REQUIRED.

06/07/2021

MOORE
CONSULTING ENGINEERS, LLC
457 Oakshade Road, Shamong, NJ 08088
Tel: (609) 268-0500 Fax: (609) 268-5050
JEFFREY A. MOORE
PROFESSIONAL ENGINEER
NJ LIC. NO. 24GE04051000
NJ AUTH. NO. 24GA28120100
MCE PORJCET #21037

PROJECT
STONE HARBOR BEACH PATROL HEAD QUARTERS
95TH STREET & BEACH
STONE HARBOR, NJ

TITLE
MECHANICAL - COVERSHEET

CONTRACTOR SHALL CHECK & VERIFY ALL DIMENSIONS AND FIELD CONDITIONS PRIOR TO STARTING CONSTRUCTION.

REV:	DESC:	DATE:
	BID ISSUE	06/07/21

DRAWN BY:	AT
CHECKED BY:	SLC
DATE:	04/20/21
SCALE:	AS NOTED

PROJECT No. 21037

M000

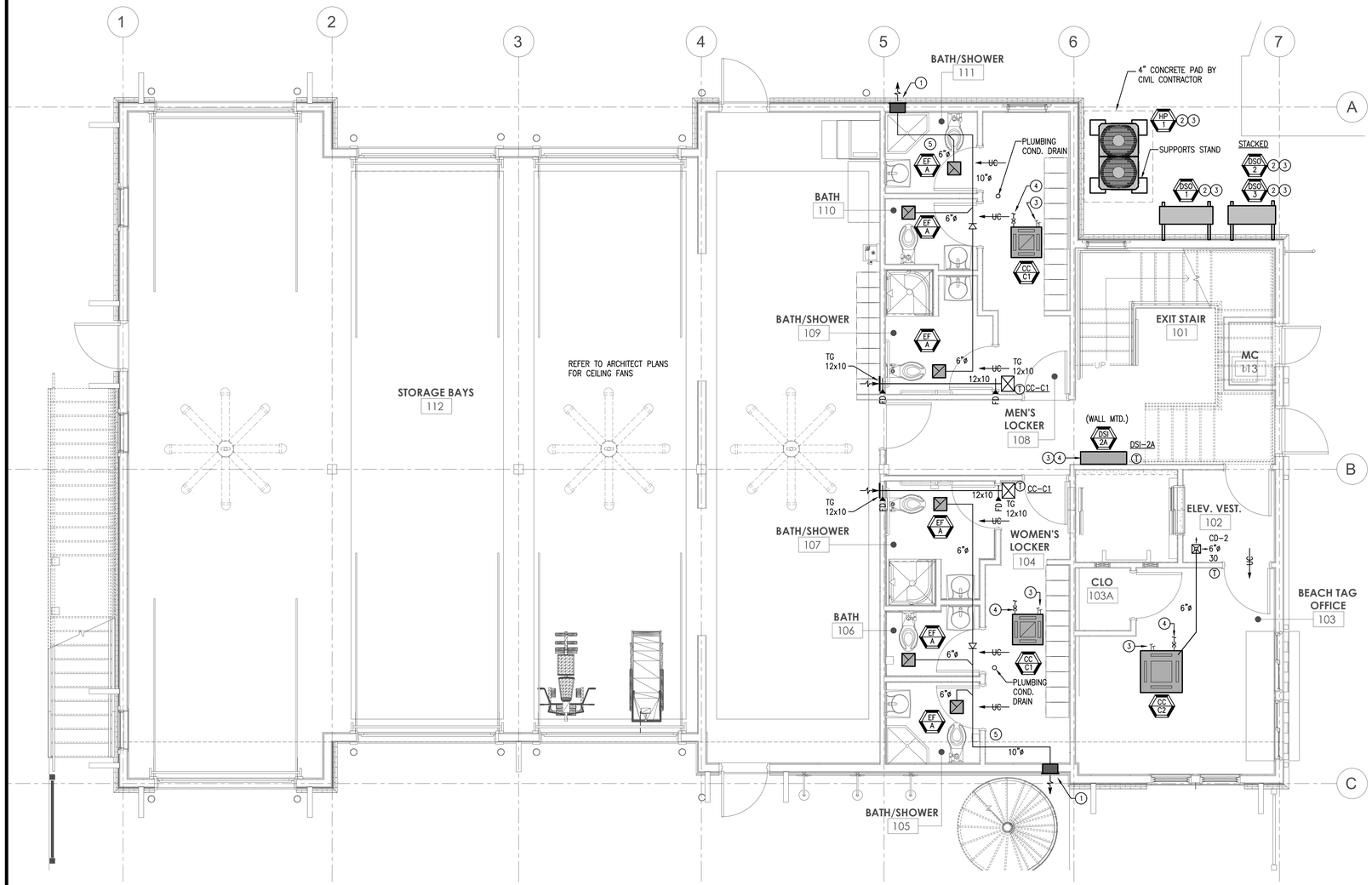

01 MECHANICAL – FIRST FLOOR PLAN
SCALE: 1/4" = 1' – 0"

DRAWING NOTES:

1. DRAWINGS ARE DIAGRAMMATIC. PROVIDE ADDITIONAL OFFSETS, TRANSITIONS, ETC. AS REQUIRED TO AVOID INTERFERENCES ENCOUNTERED.
2. CONTRACTOR SHALL PROVIDE MANUFACTURER'S RECOMMENDED CLEARANCES AND ACCESS TO ALL EQUIPMENT. COORDINATE LOCATIONS WITH OTHER TRADES TO AVOID CONFLICTS.
3. SPACE ABOVE CEILING IS VERY LIMITED. COORDINATE WITH ALL TRADES FOR DUCTWORK ROUTING PRIOR TO FABRICATION AND INSTALLATION.
4. ALL BATHROOM EXHAUST SHALL TERMINATE ON EXTERIOR A MINIMUM OF 3 FEET FROM ALL OPERABLE WINDOWS AND OTHER OPENINGS TO BUILDINGS AND 10 FEET FROM MECHANICAL INTAKES.

KEY NOTES:

1. PROVIDE BRICK VENT GREENHECK MODEL BVF 12"x4 3/4". COORDINATE LOCATION AND FRAMING WITH ARCHITECT AND STRUCTURAL. DEPTH TO MATCH WALL THICKNESS.
2. COORDINATE ELEVATION AND SUPPORT OF OUTDOOR UNITS WITH ARCHITECT AND STRUCTURAL CONTRACTOR. SECURE ALL EQUIPMENT AND SUPPORTS TO MEET WINDSPEED REQUIREMENTS AND RAISED 24" ABOVE GRADE.
3. COORDINATE WITH CIVIL TO PROVIDE (HP-1) 4" CONCRETE EQUIPMENT PAD AND PROVIDE RAISED BASE SUPPORT HURRICANE OR WINDSPEED RATED. DSO-1,2,3 WALL MOUNTED 24" PROVIDE HURRICANE RATED WALL SUPPORT.
4. ROUTE REFRIGERATION LINES TO ASSOCIATED CONDENSING UNIT. PROVIDE HIDE LINE CHANNELS FOR EXPOSED PIPES.
5. ROUTE 3/4" CONDENSATE PIPING TO NEAREST PLUMBING CONDENSATE DRAIN. COORDINATE LOCATION WITH PLUMBING CONTRACTOR. UNIT DSI-2A IN EXIT STAIRS TERMINATE 3/4" CONDENSATE TO MOP SINK WITH 1" GAP ABOVE SINK. PROVIDE HIDE LINE CHANNELS FOR EXPOSED PIPE.
6. EXHAUST DUCTWORK TO BE ALUMINUM.

06/07/2021

MOORE
CONSULTING ENGINEERS, LLC
457 Oakshade Road, Shamong, NJ 08088
Tel: (609) 268-0500 Fax: (609) 268-5050
JEFFREY A. MOORE
PROFESSIONAL ENGINEER
NJ LIC. NO. 24GE04051000
NJ AUTH. NO. 24GA28120100
MCE PORJCET #21037

PROJECT
STONE HARBOR BEACH PATROL HEAD QUARTERS
95TH STREET & BEACH
STONE HARBOR, NJ

TITLE
MECHANICAL - FIRST FLOOR PLAN

CONTRACTOR SHALL CHECK & VERIFY ALL DIMENSIONS AND FIELD CONDITIONS PRIOR TO STARTING CONSTRUCTION.

REV:	DESC:	DATE:
	BID ISSUE	06/07/21

DRAWN BY:	AT
CHECKED BY:	SLC
DATE:	04/20/21
SCALE:	AS NOTED

PROJECT No. 21037

M101

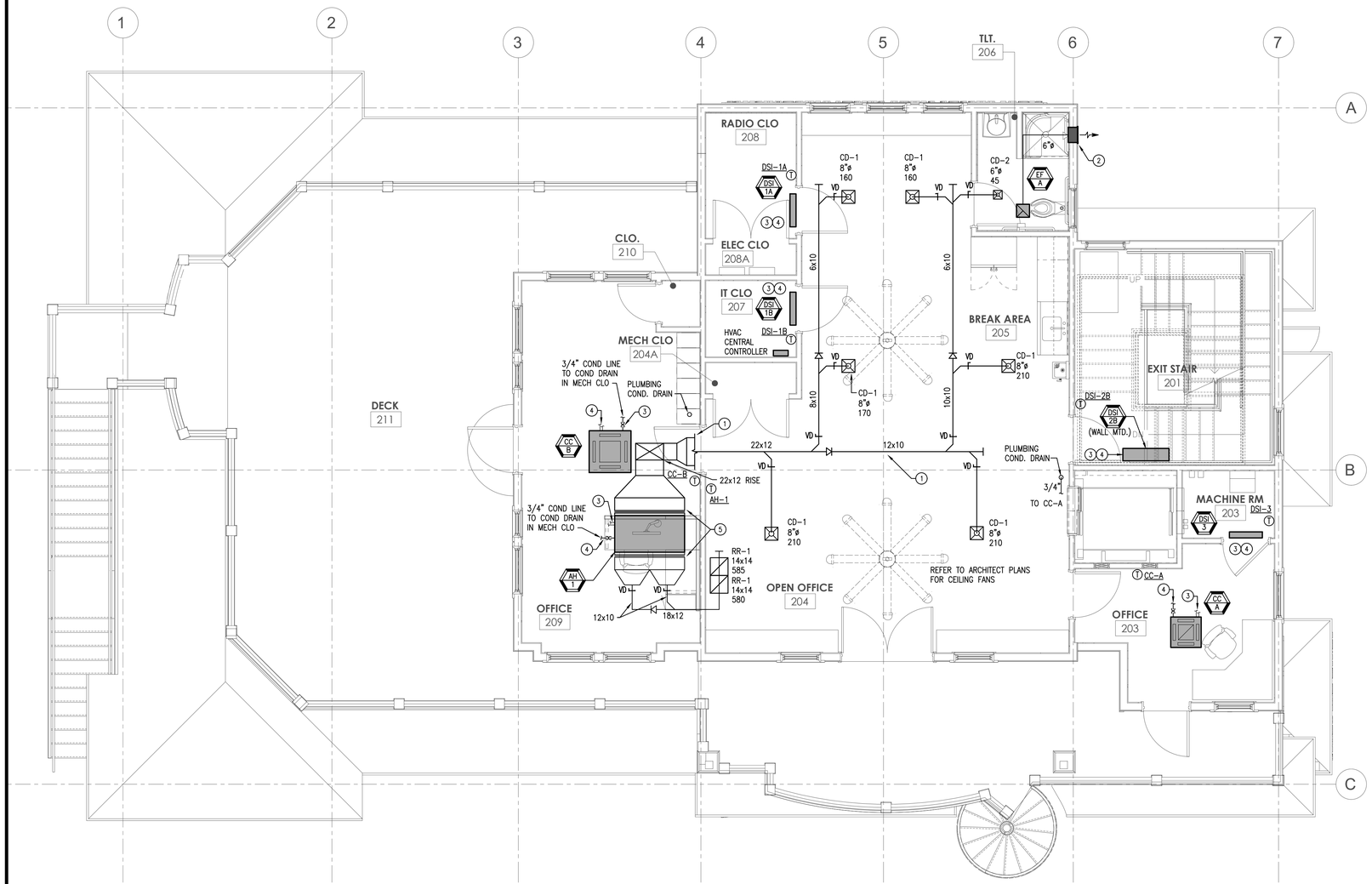

01 MECHANICAL – SECOND FLOOR PLAN
SCALE: 1/4" = 1' – 0"

DRAWING NOTES:

1. DRAWINGS ARE DIAGRAMMATIC. PROVIDE ADDITIONAL OFFSETS, TRANSITIONS, ETC. AS REQUIRED TO AVOID INTERFERENCES ENCOUNTERED.
2. CONTRACTOR SHALL PROVIDE MANUFACTURER'S RECOMMENDED CLEARANCES AND ACCESS TO ALL EQUIPMENT. COORDINATE LOCATIONS WITH OTHER TRADES TO AVOID CONFLICTS.
3. SPACE ABOVE CEILING IS VERY LIMITED. COORDINATE WITH ALL TRADES FOR DUCTWORK ROUTING PRIOR TO FABRICATION AND INSTALLATION.
4. ALL BATHROOM EXHAUST SHALL TERMINATE ON EXTERIOR A MINIMUM OF 3 FEET FROM ALL OPERABLE WINDOWS AND OTHER OPENINGS TO BUILDINGS AND 10 FEET FROM MECHANICAL INTAKES.
5. PROVIDE ACCESS TO EQUIPMENT ABOVE CEILING.
6. DUCTWORK TO DIFFUSERS TO MATCH DIFFUSER NECK SIZE.

KEY NOTES:

(1) COORDINATE WITH ARCHITECTURAL AND STRUCTURAL PLANS WITH ROUTING OF DUCTWORK WITH CHANGES IN CEILING ELEVATIONS AND BUILDING STRUCTURE.

(2) PROVIDE BRICK VENT GREENHECK MODEL BVF 12"x4 3/4". COORDINATE LOCATION AND FRAMING WITH ARCHITECT AND STRUCTURAL. DEPTH TO MATCH WALL THICKNESS.

(3) ROUTE REFRIGERATION LINES TO ASSOCIATED CONDENSING UNIT. PROVIDE HIDE LINE CHANNELS FOR EXPOSED PIPES.

(4) ROUTE 3/4" CONDENSATE PIPING TO NEAREST PLUMBING CONDENSATE DRAIN. COORDINATE LOCATION WITH PLUMBING CONTRACTOR. PROVIDE HIDE LINE CHANNELS FOR EXPOSED PIPE IN EXIT STAIRS.

(5) EXTEND SUPPLY AND RETURN DUCTWORK CONNECTIONS SIZE MATCH TO EQUIPMENT CONNECTS. PROVIDE FLEXIBLE DUCT CONNECTIONS.

06/07/2021

MOORE
CONSULTING ENGINEERS, LLC
457 Oakshade Road Shamong, NJ 08088
Tel: (609) 268-0500 Fax: (609) 268-5050
JEFFREY A. MOORE
PROFESSIONAL ENGINEER
NJ LIC. NO. 24GE05615000
NJ AUTH. NO. 24GA28120100
MCE PORJCET #21037

PROJECT
STONE HARBOR BEACH PATROL HEAD QUARTERS
95TH STREET & BEACH
STONE HARBOR, NJ

TITLE
MECHANICAL - SECOND FLOOR PLAN

CONTRACTOR SHALL CHECK & VERIFY ALL DIMENSIONS AND FIELD CONDITIONS PRIOR TO STARTING CONSTRUCTION.

REV:	DESC:	DATE:
	BID ISSUE	06/07/21

DRAWN BY:	AT
CHECKED BY:	SLC
DATE:	04/20/21
SCALE:	AS NOTED

PROJECT No. 21037

M102

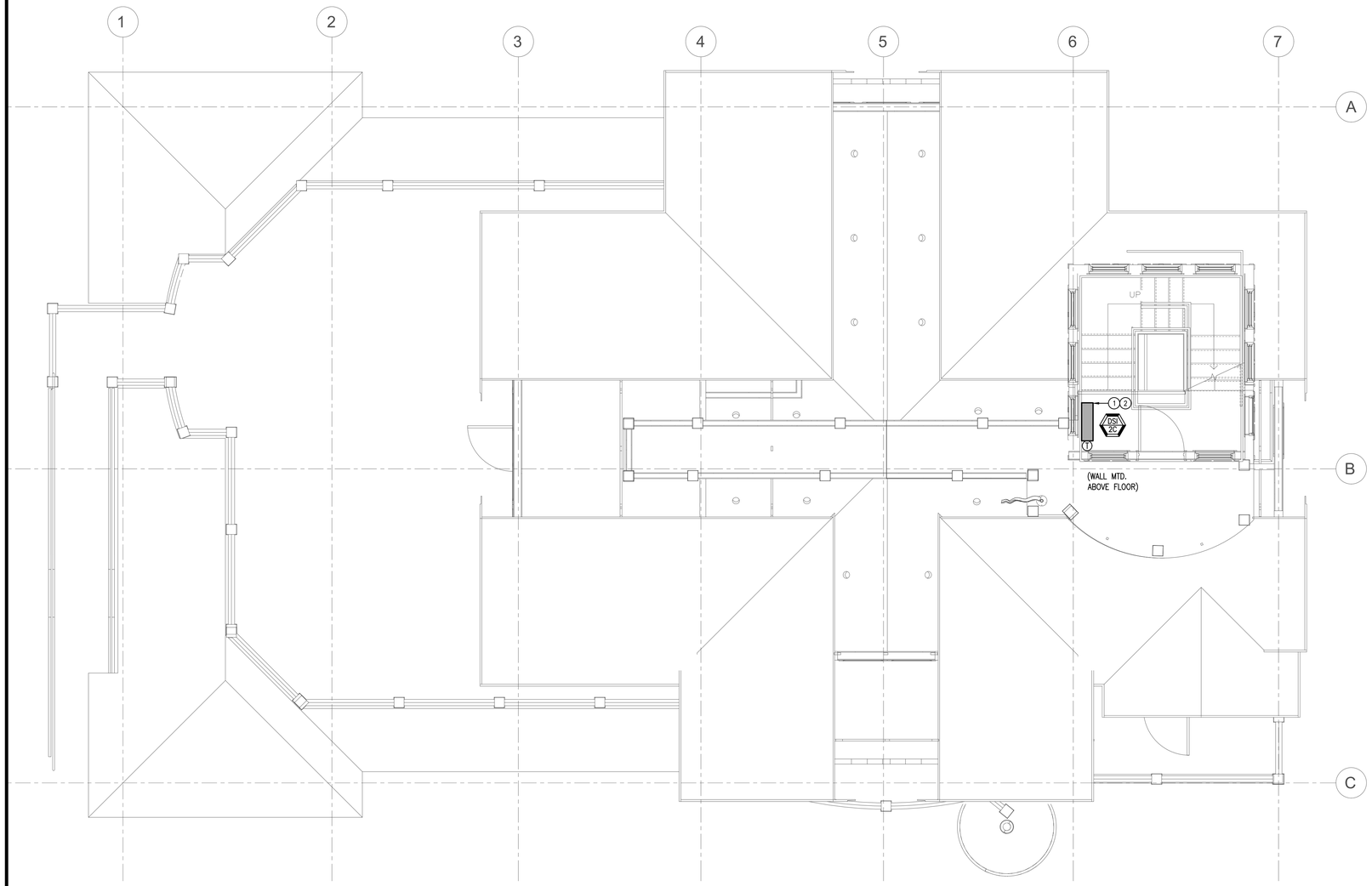

01 MECHANICAL – CROW'S NEST PLAN
SCALE: 1/4" = 1' – 0"

DRAWING NOTES:

1. DRAWINGS ARE DIAGRAMMATIC. PROVIDE ADDITIONAL OFFSETS, TRANSITIONS, ETC. AS REQUIRED TO AVOID INTERFERENCES ENCOUNTERED.
2. CONTRACTOR SHALL PROVIDE MANUFACTURER'S RECOMMENDED CLEARANCES AND ACCESS TO ALL EQUIPMENT. COORDINATE LOCATIONS WITH OTHER TRADES TO AVOID CONFLICTS.

KEY NOTES:

1. ROUTE REFRIGERATION LINES TO ASSOCIATED CONDENSING UNIT. PROVIDE HIDE LINE CHANNELS FOR EXPOSED PIPES.
2. ROUTE 3/4" CONDENSATE PIPING TO NEAREST PLUMBING CONDENSATE DRAIN ON 2ND FLOOR. COORDINATE LOCATION WITH PLUMBING CONTRACTOR. PROVIDE HIDE LINE CHANNELS FOR EXPOSED PIPES.

06/07/2021

MOORE
CONSULTING ENGINEERS, LLC
457 Oakshade Road, Shamong, NJ 08088
Tel: (609) 268-0500 Fax: (609) 268-5050
JEFFREY A. MOORE
PROFESSIONAL ENGINEER
NJ LIC. NO. 24GE04051000
NJ AUTH. NO. 24GA28120100
MCE PORJCET #21037

PROJECT
STONE HARBOR BEACH PATROL HEAD QUARTERS
95TH STREET & BEACH
STONE HARBOR, NJ

TITLE
MECHANICAL - CROW'S NEST PLAN

CONTRACTOR SHALL CHECK & VERIFY ALL DIMENSIONS AND FIELD CONDITIONS PRIOR TO STARTING CONSTRUCTION.

REV:	DESC:	DATE:
	BID ISSUE	06/07/21

DRAWN BY:	AT
CHECKED BY:	SLC
DATE:	04/20/21
SCALE:	AS NOTED

PROJECT No. 21037

M103

AIR HANDLER UNIT SCHEDULE (DX COOLING/HEATING)

TAG	TYPE	BASIS OF DESIGN MANUF.	INDOOR MODEL NO.	NOMINAL TONNAGE CAPACITY	FAN DATA			INDOOR CAPACITIES		ELECTRICAL DATA				REMARKS
					PEAK FAN CFM	E.S.P. IN W.C.	SOUND LEVEL (INDOOR)	TOTAL COOLING (BTUH)	TOTAL HEATING (BTUH)	VOLTAGE	AMPS	MCA	MOCP	
CC-A	2x2 CEILING CASSETTE – DUCTLESS	MITSUBISHI TRANE	TPLFYP-005-FM-140A	0.5	280	–	26, 28, 30	5,000	5,500	208/1ϕ/60	0.02	0.30	15	1-16
CC-B	3x3 CEILING CASSETTE – DUCTLESS	MITSUBISHI TRANE	TPLFYP-008-EM-140A	0.75	315	–	29, 32, 38	8,000	9,000	208/1ϕ/60	0.02	0.28	15	1-16
CC-C1	2x2 CEILING CASSETTE – DUCTLESS	MITSUBISHI TRANE	TPLFYP-012-FM-140A	1.0	335	–	30, 34, 39	12,000	13,500	208/1ϕ/60	0.02	0.29	15	1-16
CC-C2	3x3 CEILING CASSETTE – DUCTLESS	MITSUBISHI TRANE	TPLFYP-012-EM-140A	1.0	600	–	30, 34, 39	12,000	13,500	208/1ϕ/60	0.03	0.39	15	1-16
AH-1	CEILING CONCEALED – DUCTED	MITSUBISHI TRANE	TPEFYP-036-MA-143A	3.0	1165	0.6	28, 32, 36	36,000	40,000	208/1ϕ/60	0.24	3.50	15	1-9, 11, 14, 16, 17

NOTES/ACCESSORIES:
1. COORDINATE INSTALLATION WITH MANUFACTURER'S RECOMMENDATIONS AND INSTALL GUIDELINES.
2. REFRIGERANT 410A
3. REFRIGERANT PIPE SIZES ARE O.D. AC&R COPPER TUBING, JOINT KIT. LENGTH AND SIZES SHALL BE VERIFIED WITH MANUFACTURER.
4. PROVIDE REFRIGERANT DIVERSITECH SPEEDICHANNEL LINE SET COVERS, JOINTS, WALL ESCUTCHEON, ACCESSORIES AND COORDINATE COLOR WITH ARCHITECT.
5. PROVIDE WITH INTEGRAL CONDENSATE PUMP/LIFT MECHANISM AND DRAIN PAN LEVEL SENSOR/CONTROL.
6. DISCONNECT SWITCH PROVIDED BY ELECTRICAL CONTRACTOR.
7. COORDINATE POWER & WIRING REQUIREMENTS WITH ELECTRICAL CONTRACTOR.
8. PROVIDE MOUNTING ACCESSORIES AS REQUIRED FOR MOUNTING TYPE.
9. PROVIDE LOCAL CENTRAL CONTROLLER AND WIRED THERMOSTATS. COORDINATE WITH MANUFACTURER FOR COMPLETE BUILDING INTERFACE WITH DUCT SPLIT SYSTEM AND COORDINATE WITH OWNER FOR ADDITIONAL SYSTEM REMOTE INTERFACE. REFER TO SPECIFICATIONS FOR ADDITIONAL REQUIREMENTS.
10. PROVIDE CEILING CASSETTES WITH 3D i-SEE SENSOR AND OCCUPANCY DETECTION.
11. PROVIDE HEADERS AND JOINT PIPES AS REQUIRED. PROVIDE LOCKING REFRIGERATION CAPS AND LOCAL TEST PORTS.
12. PROVIDE WITH WASHABLE AIR FILTERS.
13. REFER TO PLANS FOR QUANTITIES AND LOCATIONS.
14. PROVIDE FACTORY START-UP AND TRAINING FOR ALL UNITS.
15. PROVIDE CC-B2 WITH 3x3 CEILING CASSETTE COORDINATE WITH BUILDING STRUCTURE AND SEE FLOOR PLAN PROVIDE SUPPLY AIR BRANCH OUTLET.
16. PROVIDE HURRICANE RATED OR WINDSPEED RATED SUPPORTS FOR OUTDOOR UNITS. SECURE UNITS AND SUPPORTS. COORDINATE WITH ARCHITECT/STRUCTURAL.
17. FOR AIR HANDLER (AH):
    - 17.1. PROVIDE WITH DRAIN PAN UNDER UNITS WITH WATER OVERFLOW/WATER DETECTION SHUT OFF KIT.
    - 17.2. PROVIDE FILTER BOX AND FRAME.
    - 17.3. PROVIDE TWO (2) EXTRA FILTERS.

VRF AIR COOLED HEAT PUMP SCHEDULE

TAG	SERVICE	BASIS OF DESIGN MANUF.	MODEL NO.	NOMINAL TONNAGE CAPACITY	NOMINAL SYSTEM CONNECTED CAPACITY (%)	COOLING CAPACITY		HEATING CAPACITY		ELECTRICAL DATA				SOUND PRESS. dBA	IEER/EER	BASE WEIGHT (LBS.)	REMARKS
						TOTAL (BTUH)	CORRECTED COOLING TOTAL CAP. (BTUH)	TOTAL (BTUH)	CORRECTED HEATING TOTAL CAP. (BTUH)	VOLTAGE	MCA	RFS	MOCP				
HP-1	BUILDING	MITSUBISHI TRANE	TUHYP0963AN40AB(BS)	8	88.5	96,000	97,276	108,000	68,951	208/3ϕ/60	33	40	50	61	28.15/13.3	570	ALL

NOTES/ACCESSORIES:
1. COORDINATE INSTALLATION WITH MANUFACTURER'S RECOMMENDATIONS AND INSTALL GUIDELINES.
2. REFRIGERANT 410A
3. REFRIGERANT PIPE SIZES ARE O.D. AC&R COPPER TUBING, JOINT KIT. LENGTH AND SIZES SHALL BE VERIFIED WITH MANUFACTURER.
4. PROVIDE REFRIGERANT DIVERSITECH SPEEDICHANNEL LINE SET COVERS, JOINTS, WALL ESCUTCHEON, ACCESSORIES AND COORDINATE COLOR WITH ARCHITECT.DISCONNECT SWITCH PROVIDED BY ELECTRICAL CONTRACTOR.
5. PROVIDE CENTRAL CONTROLLER AND ACCESSORIES FOR INTERFACE WITH ALL UNITS.
6. PROVIDE WITH COLD WEATHER STAND, BASE PAN HEATER AND HAIL/SNOW HOODS.
7. PROVIDE WITH TWINNING KIT.
8. PROVIDE LOCKING REFRIGERATION CAPS AND LOCAL TEST PORTS.
9. PROVIDE COATINGS FOR ALL EXPOSED PARTS AND CABINET. SEACOAST COATINGS SHALL BE SUITABLE FOR CORROSIVE CONDITIONS OF SALT AIR.
14. PROVIDE HURRICANE RATED SUPPORTS. SECURE UNITS AND SUPPORTS. COORDINATE WITH ARCHITECT/STRUCTURAL.
15. COORDINATE WITH CIVIL TO PROVIDE HURRICANE RATED 4" CONCRETE PAD.

AIR DEVICE SCHEDULE

TAG	FLOW PATTERN	SUPPLY
CD-1	4-WAY (UNLESS NOTED OTHERWISE)	12x12 SQUARE CEILING DIFFUSER, LOUVERED FACE EQUAL TO TITUS MODEL TDCA-AA, ALUMINUM CONSTRUCTION, ADJUSTABLE DISCHARGE, PATTERN OPTION A4, 4-WAY (UNLESS NOTED ON PLANS), BORDER TYPE 1 (SURFACE MOUNT) OR BORDER TYPE 3 (LAY-IN) AS REQUIRED, OPPOSED BLADE DAMPER, NECK SIZE AS INDICATED ON DRAWINGS. COLOR BY ARCHITECT.
CD-2	4-WAY (UNLESS NOTED OTHERWISE)	6x6 SQUARE CEILING DIFFUSER, LOUVERED FACE EQUAL TO TITUS MODEL TDCA-AA, ALUMINUM CONSTRUCTION, ADJUSTABLE DISCHARGE, PATTERN OPTION A4, 4-WAY (UNLESS NOTED ON PLANS), BORDER TYPE 1 (SURFACE MOUNT) OR BORDER TYPE 3 (LAY-IN) AS REQUIRED, OPPOSED BLADE DAMPER, NECK SIZE AS INDICATED ON DRAWINGS. COLOR BY ARCHITECT.
		RETURN
RR-1	SEE PLANS	SEE PLAN FOR SIZE. RETURN GRILLE EQUAL TO TITUS MODEL 355FL, ALUMINUM CONSTRUCTION, 35 DEG LONG BLADES, 1/2" BLADE SPACING, HEAVY GAUGE STEEL BACKPAN, OPPOSED BLADE DAMPER, NECK SIZE AS INDICATED ON DRAWINGS. COLOR BY ARCHITECT.
		TRANSFER GRILLE
TG-1	SEE PLANS	SEE PLAN FOR SIZES. TRANSFER GRILLE EQUAL TO TITUS MODEL 355FL, ALUMINUM CONSTRUCTION, 35 DEG LONG BLADES, 1/2" BLADE SPACING. NECK SIZE AS INDICATED ON DRAWINGS. COLOR BY ARCHITECT.

NOTES/ACCESSORIES:
1. FINISH/COLOR OF ALL DIFFUSERS SHALL BE DETERMINED BY OWNER/ARCHITECT.
2. PROVIDE 4-WAY THROW UNLESS NOTED (ARROWS) ON PLANS.
3. MAXIMUM PRESSURE DROP FOR SUPPLY AIR DIFFUSERS SHALL BE 0.10" W.G.
4. MECHANICAL CONTRACTOR SHALL COORDINATE BORDER TYPES WITH CEILING AND WALL CONSTRUCTION. REFER TO ARCH. REFLECTED CEILING PLAN. COORDINATE WITH GENERAL CONTRACTOR.
5. OPPOSED BLADE DAMPERS MAY BE OMITTED WHERE VOLUME DAMPERS ARE PROVIDED AT BRANCH RUNOUTS.
6. PROVIDE RADIATION CEILING DAMPERS ON ALL DIFFUSERS, REGISTERS AND GRILLES WHERE RATED CEILING OR FLOOR RATED ASSEMBLIES ARE PENETRATED TO MAINTAIN RATINGS. COORDINATE WITH ARCHITECTURAL PLANS AND G.C. FOR LOCATIONS.
7. PROVIDE ROUND TO RECTANGULAR BOOTS TO CONNECT ROUND BRANCH TAKE-OFFS TO SUPPLY AIR RECTANGULAR REGISTERS AND DIFFUSERS.
8. DRAWING SYMBOL INFORMATION:

DUCTLESS SPLIT – COOLING ONLY / HEAT PUMP SYSTEM SCHEDULE

SYSTEM	TAG INDOOR UNIT	TAG OUTDOOR UNIT	SERVICE	BASIS OF DESIGN MANUF.	TYPE	MODEL No. INDOOR/OUTDOOR	NOM. TONS	IEER/SEER	FAN DATA	CAPACITIES		ELECTRICAL DATA			REMARKS
									HIGH FAN CFM	NOM. COOLING (BTUH)	NOM. HEATING (BTUH)	VOLTAGE	AMPS	MOCP	
1	DSI-1A, 1B		RADIO/IT CLOSETS	MITSUBISHI TRANE	WALL-MOUNTED	TPKA0A0241KA709A (INDOOR)	1.0	–	775	12,000	–	208/1ϕ/60	1.0	15	ALL
		DSO-1	RADIO/IT CLOSETS	MITSUBISHI TRANE	CONDENSER	TRUYA0241HA70BA (OUTDOOR)	2.0	12.4/20	–	24,000	–	208/1ϕ/60	19.0	26	ALL
2	DSI-2A, 2B		EXIT STAIRS	MITSUBISHI TRANE	WALL-MOUNTED	NTXWPH09B112AA (INDOOR)	0.75	–	381	9,000	9,600	208/1ϕ/60	1.0	15	ALL
	DSI-2C		EXIT STAIRS	MITSUBISHI TRANE	FLOOR-MOUNTED	NTXFKS12A112AA (INDOOR)	1.0	–	275	12,000	13,000	208/1ϕ/60	1.0	15	ALL
		DSO-2	EXIT STAIRS	MITSUBISHI TRANE	CONDENSER	NTXMPH03A132AA (OUTDOOR)	2.5	-/18.0	–	28,400	27,600	208/1ϕ/60	30.5	40	ALL
3	DSI-3		ELEV. MACHINE RM	MITSUBISHI TRANE	WALL-MOUNTED	TPKA0A0181HA70A (INDOOR)	1.5	–	425	18,000	–	208/1ϕ/60	1.0	15	ALL
		DSO-3	ELEV. MACHINE RM	MITSUBISHI TRANE	CONDENSER	TRUYA018KA70BA (OUTDOOR)	1.5	-/18.5	–	18,000	–	208/1ϕ/60	11.0	28	ALL

NOTES/ACCESSORIES:
1. COORDINATE INSTALLATION WITH MANUFACTURER'S RECOMMENDATIONS AND INSTALL GUIDELINES.
2. REFRIGERANT 410A
3. REFRIGERANT PIPE SIZES ARE O.D. AC&R COPPER TUBING, JOINT KIT. LENGTH AND SIZES SHALL BE VERIFIED WITH MANUFACTURER.
4. PROVIDE REFRIGERANT DIVERSITECH SPEEDICHANNEL LINE SET COVERS, JOINTS, WALL ESCUTCHEON, ACCESSORIES AND COORDINATE COLOR WITH ARCHITECT.DISCONNECT SWITCH PROVIDED BY ELECTRICAL CONTRACTOR FOR EACH SECTION.
5. INDOOR SECTION SHALL BE WIRED & POWERED VIA OUTSIDE SECTION.
6. PROVIDE WITH INTEGRAL CONDENSATE PUMP FOR CEILING CASSETTES. PROVIDE CONDENSATE PUMP MFG.
7. WALL/FLOOR UNIT SHALL BE SURFACE MOUNTED, PROVIDE MOUNTING ACCESSORIES AS REQUIRED FOR MOUNTING TYPE. COORDINATE ELEVATION AND LOCATION WITH ARCHITECT.
8. PROVIDE HANGER SUPPORT CEILING MOUNTED UNITS.
9. PROVIDE WIRED REMOTE CONTROLLER AND CONTROL INTERFACE WITH HP-1 SYSTEM.
10. OFFICE 103 – PROVIDE SUPPLY AIR BRANCH OUTLET AND COORDINATE 3x3 CEILING CASSETTE PROVIDE STRUCTURE BOX.
11. PROVIDE COATINGS FOR ALL EXPOSED PARTS AND CABINET. SEACOAST COATINGS SHALL BE SUITABLE FOR CORROSIVE CONDITIONS OF SALT AIR.
12. PROVIDE LOCKING REFRIGERATION CAPS AND LOCAL TEST PORTS.
13. PROVIDE LOW AMBIENT COOLING AND WIND BAFFLES.
14. PROVIDE OUTDOOR UNITS HURRICANE RATED OR WINDSPEED RATED SUPPORTS FOR OUTDOOR UNITS. SECURE UNITS AND SUPPORTS. COORDINATE WITH ARCHITECT/STRUCTURAL.

FAN SCHEDULE

TAG	SERVICE	BASIS OF DESIGN MANUF.	MODEL NO.	TYPE	CFM	SP. IN. W.G.	FRPM	HP/WATTS	VOLTAGE	NOISE LEVEL (SONES)	CONTROL	REMARKS
EF-A	BATHROOMS	PANASONIC	FV-0511VK2	CEILING	80	0.25	1113	9.6 WATTS	120/1ϕ/60	0.5	LIGHT SWITCH	ALL

NOTES/ACCESSORIES:
1. PROVIDE WITH INTEGRAL BACKDRAFT DAMPER, DISCONNECT AND HANGER KIT.
2. PROVIDE WITH VARIABLE SPEED CONTROL (FV-VS15K1) AND DELAY TIMER. FAN SHALL OPERATE AT 45 CFM (ADJ.) AND RISE TO HIGHER 80 CFM (ADJ.) LEVEL WHEN LIGHT SWITCH IS TURNED ON. RISE TO HIGHER 80 CFM (ADJ.) RELATIVE HUMIDITY ABOVE 60% CONDENSATION SENSOR (FV-CSWK1) DELAY SHALL RUN FAN AT HIGHER LEVEL FOR 15 MIN. (ADJ.) OR AS DIRECTED BY OWNER.
3. REFER TO PLANS FOR QUANTITIES.
4. LIGHT SWITCH AND WIRING PROVIDED BY ELECTRICAL CONTRACTOR.

06/07/2021

MOORE
CONSULTING ENGINEERS, LLC
457 Oakshade Road, Shamong, NJ 08088
Tel: (609) 268-0500 Fax: (609) 268-5050
JEFFREY A. MOORE
PROFESSIONAL ENGINEER
NJ LIC. NO. 24GE05615500
NJ AUTH. NO. 24GA28120100
MCE PORJCET #21037

PROJECT
STONE HARBOR BEACH PATROL HEAD QUARTERS
95TH STREET & BEACH
STONE HARBOR, NJ

TITLE
MECHANICAL - SCHEDULES I

CONTRACTOR SHALL CHECK & VERIFY ALL DIMENSIONS AND FIELD CONDITIONS PRIOR TO STARTING CONSTRUCTION.

REV:	DESC:	DATE:
	BID ISSUE	06/07/21

DRAWN BY:	AT
CHECKED BY:	SLC
DATE:	04/20/21
SCALE:	AS NOTED

PROJECT No. 21037

M200

DUCTWORK SCHEDULE

SYSTEM	DUCT TYPE	PRESSURE CLASSIFICATION (IN W.G.)	MATERIAL	LATER JOINTS	LONGITUDINAL SEAMS	FITTINGS	REMARKS
SUPPLY, RETURN, OUTSIDE AIR DUCTWORK	RECTANGULAR & SPIRAL ROUND	– 2 UPSTREAM OF FAN +2 DOWNSTREAM OF FAN	GALVANIZED SHEET METAL	SMACNA FIG 1–4 TYPE T–17 TO T–19, TYPES T–21 TO T–23	SMACNA FIG 1–5, PITTSBURGH LOCK SEAMS	SQUARE W/ TURNING VANES	–
EXHAUST AIR DUCTWORK	RECTANGULAR & SPIRAL ROUND	–2	GALVANIZED SHEET METAL	SMACNA FIG 1–4 TYPE T–17 TO T–19,	SMACNA FIG 1–5, PITTSBURGH LOCK	SQUARE W/ TURNING VANES	1

NOTES/ACCESSORIES:
1. PROVIDE ALUMINUM DUCTWORK FOR BATH EXHAUST FAN UP TO THE FIRST 10FT FROM EXHAUST FAN.

DUCTWORK INSULATION SCHEDULE

TYPE	LOCATION	SYSTEM(S)	INSULATION MATERIAL	THICKNESS (IN)	JACKET MATERIAL	JACKET THICKNESS (IN)	REMARKS
CONCEALED & EXPOSED DUCTWORK	INDOOR	SUPPLY, RETURN, EXHAUST & OUTSIDE AIR	FIBERGLASS BLANKET	2" (MIN. R–6)	FOIL WRAP	–	–

PIPING SCHEDULE

LOCATION	SIZE	PIPE	JOINTING	FITTINGS	TESTING	INSULATION	JACKETING	REMARKS
FROM HVAC & REFRIGERATION CONDENSATE DRAIN	2" AND SMALLER	TYPE L COPPER	95–5 TIN–ANTIMONY SOLDER TO ASTM B62 GR 95 TA	COPPER PRESSURE FITTINGS. WROUGHT COPPER SOLDER JOINT FITTINGS TO ASTM B16.22. CAST COPPER ALLOY FITTINGS TO ASTM B16.18.	TEST PIPING USING REQUIREMENTS OF LOCAL OR STATE CODE BY MEANS OF THE WATER TEST. TEST WITH A WATER HEIGHT OF 10'–0" OR 4.3 PSI.	1/2" FIBERGLASS	WHITE PVC JACKET	1, 2
PROCESS GLYCOL/CHILLED WATER AND MAKE–UP WATER	2–½" AND SMALLER	TYPE L COPPER	95–5 TIN–ANTIMONY SOLDER TO ASTM B62 GR 95 TA	COPPER PRESSURE FITTINGS. WROUGHT COPPER SOLDER JOINT FITTINGS TO ASTM B16.22. CAST COPPER ALLOY FITTINGS TO ASTM B16.18.	TEST PIPING USING REQUIREMENTS OF LOCAL OR STATE CODE BY MEANS OF THE WATER TEST. TEST WITH A WATER HEIGHT OF 10'–0" OR 4.3 PSI.	1" FIBERGLASS	WHITE PVC JACKET–WHERE EXPOSED IN PROCESS SPACE	–

NOTES/ACCESSORIES:
1. SLOPE PIPE IN DIRECTION OF FLOW MIN. OF 1/8" PER FOOT.
2. PROVIDE P–TRAP AT EACH MECHANICAL UNIT.

REFRIGERANT PIPING SCHEDULE

SYSTEM	PRESSURE	TEMPERATURE	SIZE	LOCATION	PIPE	JOINTING	FITTINGS	SERVICE VALVES	FILTER–DRIERS	MOISTURE INDICATORS	TESTING	INSULATION	JACKETING	REMARKS
REFRIGERANT PIPING	LESS THAN 535 PSIG	LESS THAN 275 °F	3" AND SMALLER	THROUGH PROCESS SPACES	HARD COPPER TUBE, TYPE ACR TO ASTM B 280	ASME SFA A5.8 COMPLIANT BCYP–5 OR BCUP–6 WITHOUT FLUX WITH MELTING RANGE OF 1190 TO 1480 °F	WROUGHT COPPER AND COPPER ALLOY BRAZE–JOINT PRESSURE FITTINGS TO ASME B16.50	FORGED BRASS BODY WITH COPPER STUBS, BRASS CAPS, REMOVABLE VALVE CORE WITH FLARED OR SOLDERED ENDS WITH 500 PSIG WORKING PRESSURE	ARI–710 UL LISTED, BRASS WITH REMOVABLE BRASS CAPS AND 500 PSIG WORKING PRESSURE	UL LISTED WITH BRASS OR COPPER BODY, SOLDERED ENDS, COLOR CODED MOISTURE INDICATOR WITH REMOVABLE CARTRIDGE. 500 PSIG WORKING PRESSURE AT 200 °F	TEST PIPING USING REQUIREMENTS OF LOCAL OR STATE CODE AND AS A MINIMUM PRESSURE TEST SYSTEM AT 300 PSI, FOR 2 HOURS WITH NO DROP IN PRESSURE. TEST PIPE IN ACCORDANCE WITH ASME B31.5 WITH DRY NITROGEN	1" ELASTOMERIC	SOLVENT SEALED 30 MIL PVC JACKETING	ALL
REFRIGERANT PIPING	LESS THAN 535 PSIG	LESS THAN 275 °F	3" AND SMALLER	OUTSIDE	HARD COPPER TUBE, TYPE ACR TO ASTM B 280	ASME SFA A5.8 COMPLIANT BCYP–5 OR BCUP–6 WITHOUT FLUX WITH MELTING RANGE OF 1190 TO 1480 °F	WROUGHT COPPER AND COPPER ALLOY BRAZE–JOINT PRESSURE FITTINGS TO ASME B16.50	FORGED BRASS BODY WITH COPPER STUBS, BRASS CAPS, REMOVABLE VALVE CORE WITH FLARED OR SOLDERED ENDS WITH 500 PSIG WORKING PRESSURE	ARI–710 UL LISTED, BRASS WITH REMOVABLE BRASS CAPS AND 500 PSIG WORKING PRESSURE	UL LISTED WITH BRASS OR COPPER BODY, SOLDERED ENDS, COLOR CODED MOISTURE INDICATOR WITH REMOVABLE CARTRIDGE. 500 PSIG WORKING PRESSURE AT 200 °F	TEST PIPING USING REQUIREMENTS OF LOCAL OR STATE CODE AND AS A MINIMUM PRESSURE TEST SYSTEM AT 300 PSI, FOR 2 HOURS WITH NO DROP IN PRESSURE. TEST PIPE IN ACCORDANCE WITH ASME B31.5 WITH DRY NITROGEN	1" ELASTOMERIC	16 GA ALUMINUM JACKET	ALL
REFRIGERANT PIPING	LESS THAN 535 PSIG	LESS THAN 275 °F	3" AND SMALLER	NON PROCESS INTERIOR SPACES	HARD COPPER TUBE, TYPE ACR TO ASTM B 280	ASME SFA A5.8 COMPLIANT BCYP–5 OR BCUP–6 WITHOUT FLUX WITH MELTING RANGE OF 1190 TO 1480 °F	WROUGHT COPPER AND COPPER ALLOY BRAZE–JOINT PRESSURE FITTINGS TO ASME B16.50	FORGED BRASS BODY WITH COPPER STUBS, BRASS CAPS, REMOVABLE VALVE CORE WITH FLARED OR SOLDERED ENDS WITH 500 PSIG WORKING PRESSURE	ARI–710 UL LISTED, BRASS WITH REMOVABLE BRASS CAPS AND 500 PSIG WORKING PRESSURE	UL LISTED WITH BRASS OR COPPER BODY, SOLDERED ENDS, COLOR CODED MOISTURE INDICATOR WITH REMOVABLE CARTRIDGE. 500 PSIG WORKING PRESSURE AT 200 °F	TEST PIPING USING REQUIREMENTS OF LOCAL OR STATE CODE AND AS A MINIMUM PRESSURE TEST SYSTEM AT 300 PSI, FOR 2 HOURS WITH NO DROP IN PRESSURE. TEST PIPE IN ACCORDANCE WITH ASME B31.5 WITH DRY NITROGEN	1" ELASTOMERIC	ADHESIVE OR SOLVENT SEALED 30 MIL PVC JACKETING	ALL

NOTES/ACCESSORIES:
1. PROVIDE SUPPORTS ALONG THE LENGTH OF EACH LINE AND WITHIN 12" OF EACH CHANGE IN DIRECTION.
2. PROVIDE CONTINUOUS 0.4% PIPE SLOPE IN DIRECTION OF FLOW. ARRANGE PIPE TO RETURN OIL TO COMPRESSOR USING TRAPS, LOOPS AND DOUBLE RISERS ARE NECESSARY.
3. INSULATE LIQUID LINE AND SUCTION LINE.
4. IF MANUFACTURER SUPPLIED LINESET IS UTILIZED, PROVIDE PIPE AND FITTINGS PER MANUFACTURER RECOMMENDATIONS. ALL OTHER SPECS TO MATCH PIPE IN THIS LOCATION.
5. REFRIGERANT CIRCUIT ACCESS PORTS LOCATED OUTDOORS SHALL BE FITTED WITH LOCKING–TYPE TAMPER–RESISTANT CAPS PER IMC.

06/07/2021

MOORE
CONSULTING ENGINEERS, LLC
457 Oakshade Road, Shamong, NJ 08088
Tel: (609) 268-0500 Fax: (609) 268-5050
JEFFREY A. MOORE
PROFESSIONAL ENGINEER
NJ LIC. NO. 24GE05615000
NJ AUTH. NO. 24GA28120100
MCE PORJCET #21037

PROJECT
STONE HARBOR BEACH PATROL HEAD QUARTERS
95TH STREET & BEACH
STONE HARBOR, NJ

TITLE
MECHANICAL - SCHEDULES II

CONTRACTOR SHALL CHECK & VERIFY ALL DIMENSIONS AND FIELD CONDITIONS PRIOR TO STARTING CONSTRUCTION.

REV:	DESC:	DATE:
	BID ISSUE	06/07/21

DRAWN BY:	AT
CHECKED BY:	SLC
DATE:	04/20/21
SCALE:	AS NOTED

PROJECT No. 21037

M201

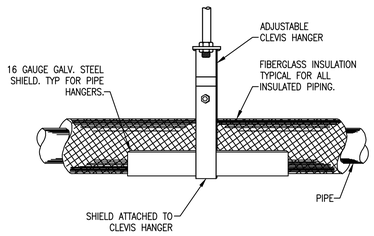

1 INSULATED PIPE HANGER DETAIL
SCALE: N.T.S.

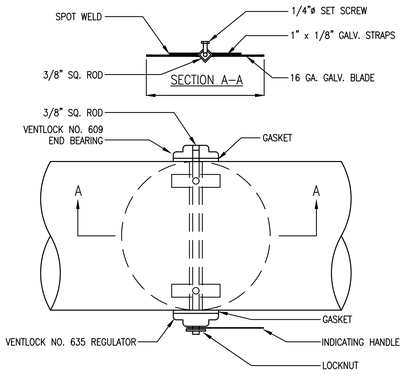

2 TYPICAL ROUND VOLUME DAMPER DETAIL
SCALE: N.T.S.

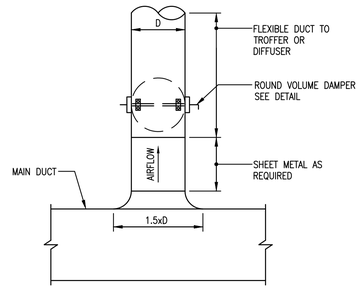

3 CIRCULAR BRANCH CONNECTION DETAIL
SCALE: N.T.S.

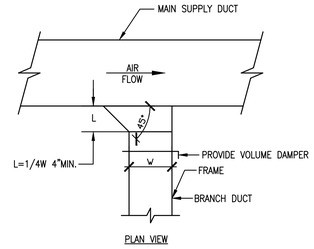

DETAIL NOTES: ALL BRANCH CONNECTIONS SHALL BE 45° ENTRY UNLESS OTHERWISE NOTED

4 BRANCH DUCT TAKE–OFF DETAIL
SCALE: N.T.S.

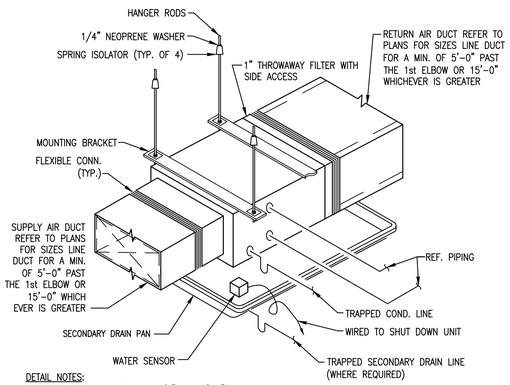

DETAIL NOTES:
1. SLOPE CONDENSATE LINE 1/8" PER 1'–0".
2. SECONDARY DRAIN PAN SHALL BE MIN 14 GA. GALVANIZED SHEET METAL WITH WELDED CORNERS AND MIN. 2" HIGH EDGES. EXTEND PAN MIN. 6" ALL AROUND UNIT.
3. SIZE AND INSTALL REFRIGERANT LIQUID AND SUCTION LINES PER MANUFACTURER'S RECOMMENDATIONS AND REQUIREMENTS.
4. PROVIDE SIMILAR FOR VERTICAL FLOOR MOUNTED UNITS. PROVIDE INTERNAL WATER LEVEL SHUTOFF FOR VERTICAL UNITS WHERE SECONDARY DRAIN PANS CANNOT BE UTILIZED.
5. REFER TO PIPING DETAIL.

5 AC UNIT & FURNACE MOUNTING DETAIL
SCALE: N.T.S.

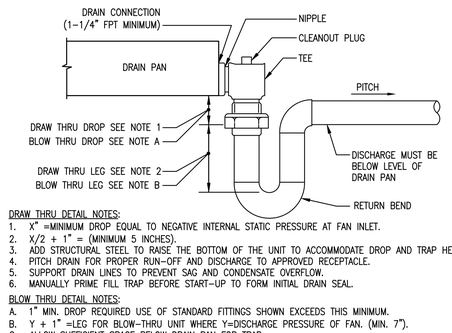

DRAW THRU DETAIL NOTES:
1. X" =MINIMUM DROP EQUAL TO NEGATIVE INTERNAL STATIC PRESSURE AT FAN INLET.
2. X/2 + 1" = (MINIMUM 5 INCHES).
3. ADD STRUCTURAL STEEL TO RAISE THE BOTTOM OF THE UNIT TO ACCOMMODATE DROP AND TRAP HEIGHT.
4. PITCH DRAIN FOR PROPER RUN–OFF AND DISCHARGE TO APPROVED RECEPTACLE.
5. SUPPORT DRAIN LINES TO PREVENT SAG AND CONDENSATE OVERFLOW.
6. MANUALLY PRIME FILL TRAP BEFORE START–UP TO FORM INITIAL DRAIN SEAL.

BLOW THRU DETAIL NOTES:
A. 1" MIN. DROP REQUIRED USE OF STANDARD FITTINGS SHOWN EXCEEDS THIS MINIMUM.
B. Y + 1" =LEG FOR BLOW–THRU UNIT WHERE Y=DISCHARGE PRESSURE OF FAN. (MIN. 7").
C. ALLOW SUFFICIENT SPACE BELOW DRAIN PAN FOR TRAP.
D. PITCH DRAIN FOR PROPER RUN–OFF AND DISCHARGE TO APPROVED RECEPTACLE.
E. SUPPORT DRAIN LINES TO PREVENT SAG AND CONDENSATE OVERFLOW.
F. MANUALLY PRIME FILL TRAP BEFORE START–UP TO TO FORM INITIAL DRAIN SEAL.
G. PROVIDE OVERFLOW DRAIN WITH TRAP SENSOR TO DE–ENERGIZE VERTICAL MOUNTED UNITS ON CONDENSATE OVERFLOW.

6 DRAIN PAN WATER SEAL DETAIL
SCALE: N.T.S.

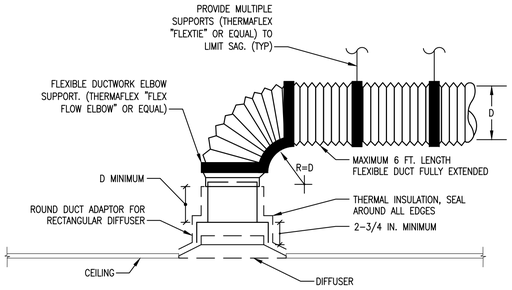

TOP CONNECTION

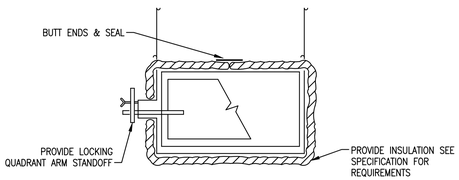

DETAIL NOTES:
FOR HANGING DUCT: TRAPEZE DUCT OR STRAP HANGER AROUND DUCT COMPLETELY. DO NOT USE ANY SCREWS, BECAUSE THEY INTERFERE WITH DAMPER BLADE(S).

7 TYPICAL DUCT INSULATION & SUPPORTS NEAR VOLUME DAMPER DETAIL
SCALE: N.T.S.

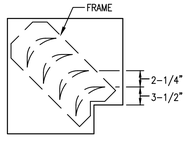

VANED ELBOW

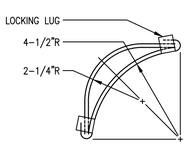

TURNING VANE

DETAIL NOTES:
1. LOCKING LUGS INTERNAL WITH VANE
2. MAXIMUM UNSUPPORTED VANE LENGTH 48"
3. FRAMES – BOLTED OR RIVETED TO ELBOW
4. VANES AND FRAMES – SAME GAUGE AS ELBOW
5. PROVIDE FOR ALL SQUARE ELBOWS.

8 DOUBLE THICKNESS TURNING VANE DETAIL
SCALE: N.T.S.

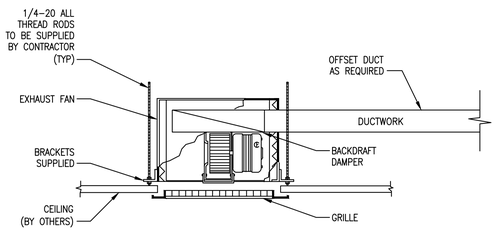

DETAIL NOTES:
1. COORDINATE RATED CEILING LOCATIONS WITH ARCHITECT PLANS AND PROVIDE MANUFACTURER'S RADIATION DAMPERS WHERE REQUIRED.

9 TYPICAL EXHAUST FAN DETAIL
SCALE: N.T.S.

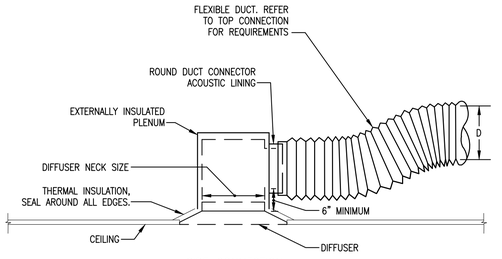

SIDE CONNECTION

DETAIL NOTES:
1. SUPPORT FLEXIBLE DUCT TO AVOID DEFLECTION. NO ABRUPT CHANGES IN DIRECTION OF FLEXIBLE DUCTWORK SHALL BE ACCEPTABLE. MAX. CHANGES IN DIRECTION SHALL BE 15 DEGREES.
2. FOLLOW SMACNA STANDARDS FOR SUPPORTS AND HANGERS.
3. SIDE CONNECTION WITH HARD DUCT SIMILAR FOR RETURN.

10 DIFFUSER CONNECTION DETAILS
SCALE: N.T.S.

06/07/2021

MOORE
CONSULTING ENGINEERS, LLC
457 Oakshade Road, Shamong, NJ 08088
Tel: (609) 268-0500 Fax: (609) 268-5050
JEFFREY A. MOORE
PROFESSIONAL ENGINEER
N.J. LIC. NO. 24GE05615000
N.J AUTH. NO. 24GA28120100
MCE PORJCET #21037

PROJECT
STONE HARBOR BEACH PATROL HEAD QUARTERS
95TH STREET & BEACH
STONE HARBOR, NJ

TITLE
MECHANICAL DETAILS

CONTRACTOR SHALL CHECK & VERIFY ALL DIMENSIONS AND FIELD CONDITIONS PRIOR TO STARTING CONSTRUCTION.

REV:	DESC:	DATE:
	BID ISSUE	06/07/21

DRAWN BY:	AT
CHECKED BY:	SLC
DATE:	04/20/21
SCALE:	AS NOTED

PROJECT No. 21037

M300

ELECTRICAL SYMBOLS LIST

(NOT ALL SYMBOLS ARE NECESSARILY USED ON THIS PROJECT)

LIGHTING SYMBOLS

- 2'x4'/2'x2'/1'x4' RECESSED CEILING MOUNTED LIGHT FIXTURE
  - A = FIXTURE TYPE
  - a = CONTROLLED BY SWITCH a
  - NL = NIGHT LIGHT
- SIMILAR TO ABOVE WITH EMERGENCY BACKUP
  - A = FIXTURE TYPE
  - a = CONTROLLED BY SWITCH a
- WALL MOUNTED LIGHT FIXTURE
  - A = FIXTURE TYPE
  - a = CONTROLLED BY SWITCH a
  - NL = NIGHT LIGHT
- STRIP LIGHT FIXTURE – TYPE AS NOTED
  - A = FIXTURE TYPE
  - a = CONTROLLED BY SWITCH a
- SIMILAR TO ABOVE WITH EMERGENCY BACKUP
  - A = FIXTURE TYPE
  - a = CONTROLLED BY SWITCH a
- UNDERCABINET LIGHT FIXTURE
  - A = FIXTURE TYPE
- CEILING MOUNTED/RECESSED FIXTURE
  - A = FIXTURE TYPE
  - a = CONTROLLED BY SWITCH a
- SIMILAR TO ABOVE WITH EMERGENCY BACKUP
  - A = FIXTURE TYPE
  - a = CONTROLLED BY SWITCH a
- WALL MOUNTED LIGHT FIXTURE
  - A = FIXTURE TYPE
  - a = CONTROLLED BY SWITCH a
- SIMILAR TO ABOVE WITH EMERGENCY BACKUP
  - A = FIXTURE TYPE
  - a = CONTROLLED BY SWITCH a
- ACCENT LIGHT OR WALL WASHER
  - A = FIXTURE TYPE
  - a = CONTROLLED BY SWITCH a
- SIMILAR TO ABOVE WITH EMERGENCY BACKUP
  - A = FIXTURE TYPE
  - a = CONTROLLED BY SWITCH a
- LIGHT TRACK–TYPE 'A' WITH TRACK MOUNTED FIXTURE TYPE 'B'
- CEILING MOUNTED EXIT LIGHT – DIRECTIONAL ARROWS WHERE INDICATED – SHADED AREAS INDICATE ILLUMINATED FACE/FACES
  - W = WALL MOUNTED
  - E = END MOUNTED
  - C = CEILING MOUNTED
- EMERGENCY BATTERY LIGHT UNIT
  - A = FIXTURE TYPE
- REMOTE LIGHT HEADS FOR EMERGENCY BATTERY LIGHT UNIT – TYPE AS NOTED

POWER SYMBOLS

- SINGLE POLE SWITCH
  - 2 = DOUBLE POLE
  - 3 = THREE–WAY
  - 4 = FOUR–WAY
  - a = CONTROLS SWITCH LEG 'a'
  - D = DIMMER
  - DR = DOOR
  - K = KEY OPERATED
  - MO = MOMENTARY CONTACT
  - T = TIMER SWITCH
  - P = PILOT LIGHT
  - LV = LOW VOLTAGE
- DISCONNECT SWITCH – TOGGLE TYPE WITH THERMAL OVERLOAD – HP RATED
- DISCONNECT SWITCH – TOGGLE TYPE MOTOR RATED, 20A, 1P, UON
- VACANCY SENSOR, WALL MOUNTED
- VACANCY SENSOR, CEILING MOUNTED
- OCCUPANCY SENSOR, CEILING MOUNTED
- OCCUPANCY SENSOR, WALL MOUNTED
- PHOTOCELL SENSOR, WALL MOUNTED
- 20A, 125V DUPLEX RECEPTACLE – FLUSH WALL MOUNTED CONTROLLED FROM WALL SWITCH "a"
- 20A, 125V DUPLEX RECEPTACLE – FLUSH WALL MOUNTED, TAMPER RESISTANT
- 20A, 125V DUPLEX RECEPTACLE WITH DUAL USB CHARGING OUTLETS FLUSH WALL MOUNTED
- 20A, 125V DUPLEX RECEPTACLE – FLUSH WALL MOUNTED, CONTROLLED
- 20A, 125V QUADRUPLEX RECEPTACLE – FLUSH WALL MOUNTED
- 20A, 125V ISOLATED GROUND, DUPLEX RECEPTACLE, FLUSH WALL MOUNTED
- 20A, 125V DUPLEX RECEPTACLE, FLUSH WALL MOUNTED, GFI TYPE
- 20A, 125V EMERGENCY DUPLEX RECEPTACLE, FLUSH WALL MOUNTED
- UTILITY METER, UON
- SINGLE RECEPTACLE, FLUSH WALL MOUNTED
- 20A, 125V DUPLEX RECEPTACLE, FLUSH FLOOR MOUNTED
- 20A, 125V QUADRUPLEX RECEPTACLE, FLUSH FLOOR MOUNTED
- PEDESTAL MOUNTED 20A, 125V DUPLEX RECEPTACLE
- PEDESTAL MOUNTED 20A, 125V QUADRUPLEX RECEPTACLE
- SPECIAL PURPOSE RECEPTACLE, FLUSH FLOOR MOUNTED, A = TYPE
- SPECIAL PURPOSE RECEPTACLE, FLUSH WALL MOUNTED, A = TYPE
- MOTOR CONTROLLER
- (100/3) COMBINATION MOTOR CONTROLLER AND DISCONNECT SWITCH AMPS/# OF POLES, VOLTAGE RATING AS REQUIRED
- (30/3) UNFUSED DISCONNECT SWITCH SWITCH AMPS/# OF POLES, VOLTAGE RATING AS REQUIRED
- (100/60/3) FUSED DISCONNECT SWITCH SWITCH AMPS/FUSE AMPS/# OF POLES, VOLTAGE RATING AS REQUIRED
- (100/3 CB) ENCLOSED CIRCUIT BREAKER TRIP AMPS/# OF POLES, VOLTAGE RATING AS REQUIRED
- SURFACE MOUNTED LIGHTING PANELBOARD
- FLUSH MOUNTED LIGHTING PANELBOARD
- SURFACE MOUNTED POWER PANELBOARD
- FLUSH MOUNTED POWER PANELBOARD
- CEILING MOUNTED JUNCTION BOX
- FLUSH WALL MOUNTED JUNCTION BOX
- FLUSH FLOOR MOUNTED JUNCTION BOX
- CAP
- PUSH BUTTON
  - K = KEY OPERATED
  - H = HOLD UP
  - P = PANIC
  - EPO = EM. POWER OFF
- EXISTING CONDUIT/EQUIPMENT TO BE REMOVED
- UNDERGROUND CONDUIT/WIRING
- POINT OF CONNECTION
- POINT OF DISCONNECTION

FIRE ALARM SYMBOLS

- CEILING MOUNTED SPACE SMOKE DETECTOR
  - F = MOUNTED UNDER RAISED FLOOR
- DUCT SMOKE DETECTOR
- CEILING MOUNTED CARBON MONOXIDE DETECTOR
- THERMAL DETECTOR RATE–OF–RISE
  - F = FIXED TEMPERATURE
- SPRINKLER WATERFLOW SWITCH
- SPRINKLER PRESSURE SWITCH
- SPRINKLER TAMPER SWITCH
- FIRE ALARM PULL STATION
- COMBINATION FIRE ALARM HORN AND STROBE LIGHT UNIT, FLUSH WALL MOUNTED
- FIRE ALARM HORN – FLUSH WALL MOUNTED
  - C = CEILING MOUNTED
- LOW FREQUENCY SOUNDER (520 HZ) – FLUSH WALL MOUNTED
  - C = CEILING MOUNTED
- FIRE ALARM MONITOR MODULE
- FIRE ALARM CONTROL MODULE
- ELEVATOR RECALL TIE–IN POINT
- FLUSH WALL MOUNTED STROBE LIGHT UNIT
- CEILING MOUNTED STROBE LIGHT UNIT
- REMOTE INDICATOR LIGHT

VOICE/DATA SYMBOLS

- VOICE & DATA OUTLET LOCATION WITH 3/4" CONDUIT TERMINATED IN A 90 DEG. BEND 6" INTO NEAREST ACCESSIBLE CEILING
- VOICE OUTLET LOCATION WITH 3/4" CONDUIT TERMINATED IN A 90 DEG. BEND 6" INTO NEAREST ACCESSIBLE CEILING
  - P = PUBLIC, F = FAX, W = WALL MOUNTED
- DATA OUTLET LOCATION WITH 3/4" CONDUIT TERMINATED IN A 90 DEG. BEND 6" INTO NEAREST ACCESSIBLE CEILING
- TELEVISION OUTLET LOCATION WITH 3/4" CONDUIT TERMINATED IN A 90 DEG. BEND 6" INTO NEAREST ACCESSIBLE CEILING
- CLOSED CAPTION TV CAMERA OUTLET LOCATION WITH 3/4" CONDUIT TERMINATED IN A 90 DEG. BEND 6" INTO NEAREST ACCESSIBLE CLG
- CARD ACCESS STATION OUTLET LOCATION WITH 3/4" CONDUIT TERMINATED IN A 90 DEG. BEND 6" INTO NEAREST ACCESSIBLE CLG

ABBREVIATIONS

(NOT ALL ABBREVIATIONS ARE NECESSARILY USED ON THIS PROJECT)

1P	SINGLE POLE
2P	TWO POLE
3P	THREE POLE
A	AMPERE
AC	ABOVE COUNTER
ACB	AIR CIRCUIT BREAKER
AFF	ABOVE FINISHED FLOOR
AFG	ABOVE FINISHED GRADE
AHJ	AUTHORITY HAVING JURISDICTION
AIC	AMPERE INTERRUPTING CAPACITY
AL	ALUMINUM
ALM	ALARM
ATS	AUTOMATIC TRANSFER SWITCH
AUTO	AUTOMATIC
AV	AUDIO VISUAL
AWG	AMERICAN WIRE GAUGE
BFC	BELOW FINISHED CEILING
BLDG	BUILDING
CAB	CABINET
CAT	CATALOG
C	CONDUIT
CB	CIRCUIT BREAKER
CCTV	CLOSED CIRCUIT TELEVISION
CKT	CIRCUIT
CL	CENTER LINE
CLG	CEILING
CTL	CONTROL
CO	CONDUIT ONLY
COM	COMMUNICATION
CONN	CONNECTED
CONT	CONTINUATION
CT	CURRENT TRANSFORMER
CU	COPPER
CUH	CABINET UNIT HEATER
DB	DECIBEL
DE	DUAL ELEMENT FUSE(S)
DEG	DEGREE
°C	DEGREE CELSIUS
°F	DEGREE FAHRENHEIT
DIA	DIAMETER
DISC	DISCONNECT
DIV	DIVISION
DN	DOWN
DP	DISTRIBUTION PANEL BOARD
DS	DISCONNECT SWITCH
DWG	DRAWING
(E)	EXISTING TO REMAIN
EA	EACH
EC	ELECTRICAL CONTRACTOR
EL	ELEVATION
ELEC	ELECTRICAL
ELEV	ELEVATOR
EM	EMERGENCY
EMT	ELECTRICAL METALLIC TUBING
ENCL	ENCLOSURE
EQ	EQUIPMENT
EWC	ELECTRIC WATER COOLER
EXIST,EX	EXISTING
EXT	EXTERIOR

FA	FIRE ALARM
FAA	FIRE ALARM ANNUNCIATOR PANEL
FACP	FIRE ALARM CONTROL PANEL
FBO	FURNISHED BY OTHERS
FDR	FEEDER
FDS	FUSED DISCONNECT SWITCH
FIXT	FIXTURE
FL	FLOOR
FLA	FULL LOAD AMPERES
FLEX	FLEXIBLE
FP	FIRE PROTECTION
FT	FEET OR FOOT
G	GROUND
GC	GENERAL CONTRACTOR
GEN	GENERATOR
GFI	GROUND FAULT INTERRUPTER
HID	HIGH INTENSITY DISCHARGE
HP	HORSE POWER
HT	HEIGHT
HV	HIGH VOLTAGE
HZ	HERTZ
ID	INSIDE DIAMETER
INC	INCANDESCENT
INCL	INCLUDED
INST	INSTRUMENT
JB	JUNCTION BOX
KCMIL	THOUSAND CIRCULAR MILS
KV	KILOVOLT
KVA	KILOVOLT AMPERE
KW	KILOWATT
KWH	KILOWATT HOUR
LFMC	LIQUIDTIGHT FLEXIBLE METALLIC CONDUIT
LFNC	LIQUIDTIGHT FLEXIBLE NON–METALLIC CONDUIT
LTG	LIGHTING
MAX	MAXIMUM
MC	METAL CLAD, MECH. CONTRACTOR
MCA	MIN. CIRCUIT AMPERES
MCB	MAIN CIRCUIT BREAKER
MDP	MAIN DISTRIBUTION PANEL
MECH	MECHANICAL
MER	MECHANICAL ROOM
MFR	MANUFACTURER
MFS	MAIN FUSED SWITCH
MH	MANHOLE, METAL HALIDE
MIN	MINIMUM
MLO	MAIN LUG ONLY
MOCP	MAX. OVERCURRENT PROTECTION
MOPD	MAX. OVERCURRENT PROTECTION
MTD	MOUNTED
MTG	MOUNTING

N	NEUTRAL
(N)	NEW
NC	NORMALLY CLOSED
NIC	NOT IN CONTRACT
NO	NORMALLY OPEN
NTS	NOT TO SCALE
OC	ON CENTER
OD	OUTSIDE DIAMETER
OH	OVERHEAD
P	POLE
PA	PUBLIC ADDRESS
PB	PULL BOX
PBS	PUSH BUTTON SWITCH
PC	PLUMBING CONTRACTOR
PHC	PIPE HEATING CABLE
ϕ, PH	PHASE
PNL	PANEL
PRI	PRIMARY
PWR	POWER
RCS	REMOTE CONTROL SWITCH
REC	RECEPTACLE
REF	REFRIGERATOR
REQ	REQUIRED
RM	ROOM
RGS	RIGID GALVANIZED STEEL CONDUIT
SAP	SPRINKLER ALARM PANEL
SCH	SCHEDULE
SE	SERVICE ENTRANCE
SEC	SECONDARY
SECT	SECTION
SN	SOLID NEUTRAL
SPEC	SPECIFICATION
SPKR	SPRINKLER
SPD	SURGE PROTECTION DEVICE
SW	SWITCH
SWBD	SWITCHBOARD
SYS	SYSTEMS
SWGR	SWITCHGEAR
TBD	TO BE DETERMINED
TEL	TELEPHONE
TEMP	TEMPERATURE
THERM	THERMOSTAT
TP	TAMPER PROOF
TS	TAMPER SWITCH
TV	TELEVISION
TYP	TYPICAL
UH	UNIT HEATER
UG	UNDERGROUND
UON	UNLESS OTHERWISE NOTED
V	VOLT OR VOLTAGE
VA	VOLT AMPERE
VFD	VARIABLE FREQUENCY DRIVE
VM	VOLTMETER
VP	VAPORPROOF
W	WATT
WP	WEATHERPROOF
WT	WATERTIGHT
XFMR	TRANSFORMER

TYPICAL DEVICE MOUNTING HEIGHTS DETAIL

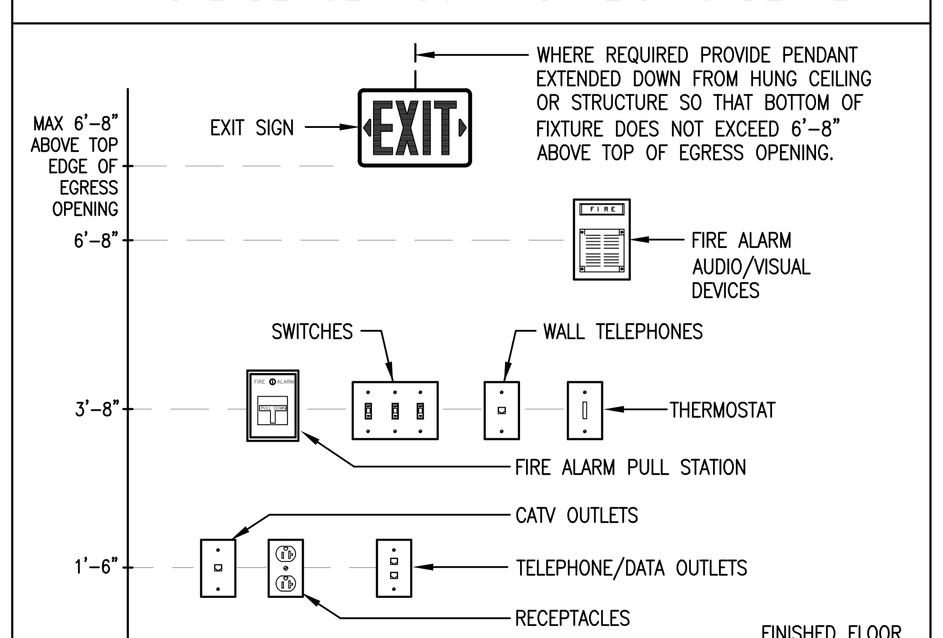

NOTES:

1. ALL MOUNTING HEIGHTS SHALL BE MEASURED FROM FINISHED FLOOR TO CENTERLINE OF DEVICE EXCEPT EXIT SIGNS. EXIT SIGNS SHALL COMPLY WITH NFPA 101, 7.10.1.9.
2. DEVICES SHALL BE INSTALLED ON A COMMON VERTICAL CENTERLINE WHEREVER POSSIBLE.
3. ALL DEVICES SHALL BE INSTALLED AT MOUNTING HEIGHTS AS INDICATED ON THIS DETAIL UNLESS OTHERWISE NOTED OR REQUIRED BY CODE (INCLUDING ADA REQUIREMENTS). FOR DEVICES INDICATED WITH AN ADJACENT "+" SYMBOL, COORDINATE MOUNTING HEIGHT WITH ARCHITECT.
4. COORDINATE ALL LOCATIONS WITH ARCHITECTURAL PLANS.
5. OPERABLE DEVICES INSTALLED IN ALL ACCESSIBLE COMMON AREAS SHALL BE MOUNTED BETWEEN 15" & 44" AFF AND/OR IN ACCORDANCE WITH ANSI A117.1 REQUIREMENTS – CONFIRM EXACT MTG HT AND LOCATION WITH ARCHITECT.

GENERAL FIRESTOPPING NOTE

CONTRACTOR SHALL BE RESPONSIBLE FOR MAINTAINING OR EXCEEDING WALL/CEILING/FLOOR FIRE ASSEMBLY RATINGS FOR ALL PENETRATIONS. CONTRACTOR SHALL VERIFY LOCATION AND RATING OF ALL FIRE ASSEMBLIES AND PROVIDE INTUMESCENT COLLARS AT ALL PENETRATIONS AND/OR FIRE RATED CAULKING AS REQUIRED.

GENERAL ELECTRICAL NOTES:

1. DRAWINGS ARE DIAGRAMMATIC AND INDICATE GENERAL ARRANGEMENT OF SYSTEMS AND WORK. FOLLOW DRAWINGS IN LAYING OUT WORK AND CHECK DRAWINGS AND FIELD DIMENSIONS OF OTHER TRADES TO VERIFY SPACE CONDITIONS. MAINTAIN HEADROOM AND SPACE REQUIREMENTS.
2. PERFORM ALL WORK IN STRICT ACCORDANCE WITH NATIONAL ELECTRICAL CODE (N.E.C.–2017) AS ADOPTED BY THE STATE OF NEW JERSEY, OSHA REQUIREMENTS, ALL FEDERAL, STATE, AND LOCAL CODES AND ALL OWNER REQUIREMENTS.
3. INCLUDE ALL TEMPORARY POWER AND LIGHTING, PERMIT, LICENSE, AND INSPECTION COSTS IN BID.
4. CONTRACTOR SHALL ISSUE IN WRITING TO ARCHITECT/ENGINEER ANY SCOPE OF WORK DISCREPANCIES AND/OR QUESTIONS PRIOR TO SUBMISSION OF BID.
5. CONTRACTOR SHALL EXAMINE ALL DRAWINGS AND SPECIFICATIONS AND VISIT THE SITE TO BECOME ACQUAINTED WITH THE CONSTRUCTION, SITE AND THE EXTENT OF THE WORK PRIOR TO SUBMISSION OF BID.
6. COORDINATE ALL REQUIRED SHUTDOWNS WITH THE OWNER (AND UTILITY COMPANY WHERE APPLICABLE) A MINIMUM OF FOURTEEN (14) DAYS IN ADVANCE. INCLUDE OVERTIME COSTS IN BID TO PERFORM ALL SHUTDOWNS (INCLUDING SHUTDOWNS FOR AREAS WHICH MAY BE UNOCCUPIED DURING CONSTRUCTION) AFTER NORMAL WORKING HOURS AS COORDINATED WITH THE OWNER. NO EXTRA CLAIMS OR COMPENSATION SHALL BE GRANTED FOR OVERTIME COSTS ASSOCIATED WITH PERFORMING SHUTDOWNS.
7. SECURE ALL SUPPORTS TO BUILDING STRUCTURE BY STEEL FOR VERTICAL SUPPORT AND BY MEANS OF TOGGLE BOLTS ON HOLLOW MASONRY UNITS, EXPANSION SHIELDS IN CONCRETE OR BRICK. MACHINE SCREWS ON METAL SURFACE, AND WOOD SCREWS ON WOOD CONSTRUCTION. NAILS, RAWL OR WOOD PLUGS NOT PERMITTED. SUPPORT HORIZONTAL RUNS OR METALLIC CONDUITS NOT MORE THAN 10 FT. APART. SUPPORT RACEWAY RISERS AT EACH FLOOR LEVEL. RUN EXPOSED RACEWAYS PARALLEL WITH OR AT RIGHT ANGLES TO WALLS.
8. PASS RACEWAYS OVER WATER, STEAM, OR OTHER PIPING WHEN PULL BOXES ARE NOT REQUIRED. NO RACEWAY WITHIN 3 IN. OF STEAM OR HOT WATERS PIPES, OR APPLIANCES, EXCEPT CROSSINGS WHERE RACEWAY SHALL BE AT LEAST 1 IN. FROM PIPE COVER.
9. FURNISH FISH WIRE IN EACH RACEWAY RUN OVER 10 FT IN WHICH WIRING IS NOT INSTALLED.
10. CUT STEEL CONDUIT ENDS SQUARE, REAM SMOOTH, PAINT MALE THREADS OF FIELD THREADED CONDUIT WITH GRAPHITE BASE PIPE COMPOUND. DRAW UP TIGHT WITH CONDUIT COUPLINGS.
11. HORIZONTAL OR CROSS RUNS IN PARTITIONS AND WALLS NOT PERMITTED.
12. ROUTE ALL CONDUITS AND CABLES PARALLEL OR PERPENDICULAR TO BUILDING LINES WHERE POSSIBLE.
13. CONNECT CONDUIT TO MOTOR CONDUIT TERMINAL BOXES WITH FLEXIBLE CONDUIT (MINIMUM 18 IN. LENGTH AND 50% SLACK). DO NOT TERMINATE IN OR FASTEN RACEWAYS TO MOTOR FOUNDATION.
14. PROVIDE SEPARATE RACEWAYS FOR CONDUCTORS OF NORMAL AND EMERGENCY CIRCUITS. COMMON BOXES: PROVIDE BARRIERS BETWEEN EMERGENCY AND NORMAL WIRING.
15. LEAVE WIRE SUFFICIENTLY LONG TO PERMIT MAKING FINAL CONNECTIONS
16. WIRE COLOR CODING: PER CODE. WHERE COLOR–CODED CABLE IS NOT AVAILABLE, CERTIFY IN WRITING AND REQUEST PERMISSION FOR OVERLAP COLOR TAPING OF CONDUCTORS (MINIMUM LENGTH 6") IN ACCESSIBLE LOCATIONS. COLOR CODING, ONCE SELECTED, MUST BE USED CONSISTENTLY FOR THE ENTIRE PROJECT
17. PULL NO THERMOPLASTIC WIRES AT TEMPERATURES LOWER THAN 32°F (0°C). PROVIDE CABLE SUPPORTS FOR WIRE IN RISER CONDUITS AS REQUIRED BY CODE.
18. SET BOXES SQUARE AND TRUE WITH BUILDING FINISH. ERECT WALL AND SWITCH OUTLETS IN ADVANCE OF FURRING AND FIREPROOFING. SECURE TO BUILDING STRUCTURE BY ADJUSTABLE STRAP IRONS.
19. VERIFY EXACT LOCATIONS AND MOUNTING HEIGHT OF ALL LIGHT FIXTURES, SWITCHES, RECEPTACLES, OUTLETS, FIRE ALARM DEVICES, VOICE/DATA DEVICES AND OTHER EQUIPMENT WITH ARCHITECTURAL DRAWINGS AND IN THE FIELD PRIOR TO ROUGH–IN. IN CENTERING OUTLETS AND LOCATION BOXES AND OUTLETS, ALLOW FOR OVERHEAD PIPES, DUCTS AND MECHANICAL EQUIPMENT VARIATIONS IN FIREPROOFING AND PLASTERING, WINDOW AND DOOR TRIM, PANELING, HUNG CEILINGS AND THE LIKE, AND CORRECT ANY INACCURACY RESULTING FROM FAILURE TO DO SO WITHOUT EXPENSE TO OWNER.
20. A "+" SYMBOL NEXT TO A DEVICE INDICATES A NON–STANDARD DEVICE MOUNTING HEIGHT – CONTRACTOR SHALL COORDINATE EXACT MOUNTING HEIGHT PRIOR TO ROUGH–IN.
21. LOCATIONS INDICATED FOR LOCAL WALL SWITCHES ARE SUBJECT TO MODIFICATIONS AT OR NEAR DOORS. COORDINATE WITH ARCHITECT AND INSTALL SWITCH ON SIDE OPPOSITE HINGE. VERIFY FINAL HINGE LOCATIONS IN FIELD PRIOR TO SWITCH OUTLET INSTALLATION.
22. PROVIDE PULL BOXES AS INDICATED AND WHEREVER NECESSARY TO FACILITATE PULLING OF WIRE AND COORDINATE LOCATIONS WITH OTHER TRADES.
23. FOR EMPTY RACEWAY RUNS, PROVIDE PULL BOXES EVERY 100FT AND AS INDICATED. COORDINATE LOCATIONS WITH OTHER TRADES.
24. JUNCTION AND PULL BOXES: LOCATE GENERALLY NOT EXPOSED IN FINISHED SPACES. WHERE NECESSARY, REROUTE CONDUITS OR MAKE OTHER ARRANGEMENTS FOR CONCEALMENT. COVERS OF JUNCTION AND PULL BOXES SHALL BE ACCESSIBLE.
25. SUPPORT JUNCTION AND PULL BOXES INDEPENDENTLY TO BUILDING STRUCTURE WITH NO WEIGHT BEARING ON CONDUITS.
26. ALL ACCESS DOOR LOCATIONS SHALL BE REVIEWED BY ARCHITECT PRIOR TO INSTALLATION.
27. FIRESTOPPING SHALL BE INSTALLED WHENEVER WIRING OR RACEWAYS CROSS FIRE RATED CONSTRUCTION.
28. THE FINAL ACCEPTANCE WILL BE MADE AFTER THE CONTRACTOR HAS ADJUSTED HIS EQUIPMENT, BALANCES THE VARIOUS SYSTEMS, DEMONSTRATED THAT IT FULFILLS THE REQUIREMENTS OF THE DRAWINGS AND SPECIFICATIONS, AND HAS FURNISHED ALL THE REQUIRED CERTIFICATES OF INSPECTION, SHOP AND RECORD DRAWINGS AND APPROVALS.
29. DEMONSTRATE PERFORMANCE AND CAPACITY OF ALL SYSTEMS AND EQUIPMENT.
30. AT COMPLETION OF PROJECT, PROVIDE NEW UPDATED TYPE WRITTEN PANELBOARD DIRECTORIES FOR ALL PANELBOARDS.
31. PROVIDE REPRODUCIBLE "AS BUILT" DRAWINGS INDICATING AS–INSTALLED CONDITIONS AFTER COMPLETION OF THE INSTALLATION.
32. THE CONTRACTOR SHALL GUARANTEE AND SERVICE THE ENTIRE INSTALLATION FOR A PERIOD OF ONE YEAR FROM THE DATE OF THE FINAL ACCEPTANCE OF THE INSTALLATION.
33. THE CONTRACTOR SHALL, DURING THE PERIOD OF THE GUARANTEE, REPLACE OR REPAIR AT HIS OWN EXPENSE ANY PIECE OF EQUIPMENT AND/OR MATERIAL WHICH IS FOUND TO BE DEFECTIVE. THE REPLACEMENT OR REPAIR SHALL BE DONE AS SOON AS NOTIFIED BY THE ENGINEER OR AUTHORIZED REPRESENTATIVE. THE CONTRACTOR SHALL ALSO REPAIR ALL DAMAGE TO SURROUNDING WORK CAUSED BY THE FAILURE, REPAIR OR REPLACEMENT OF DEFECTIVE EQUIPMENT.
34. THE CONTRACTOR SHALL COORDINATE LOCATION(S) OF ALL PLENUM RATED SPACE(S) WITH THE MC. EC SHALL PROVIDE METAL CONDUIT OR MC CABLE WITHIN PLENUM RATED SPACE(S).
35. PER CURRENT ADOPTED FEMA PUBLICATION P–348, ON ALL CONTROL AND UTILIZATION EQUIPMENT (I.E RECEPTACLES, SWITCHES, DISCONNECTS, ETC.) SHALL BE LOCATED 2' ABOVE DESIGN FLOOD PLAIN. THESE DEVICES SHALL BE FED IN NON–CORROSIVE CONDUIT AND BOX SYSTEM, ROUTED VERTICALLY FROM ABOVE. CONFIRM DESIGN FLOOD PLAIN ELEVATION WITH CIVIL ENGINEER AND AHJ PRIOR TO ANY PURCHASE OR ROUGH–IN.
36. (1) EC SHALL PROVIDE SHOP DRAWINGS PER SECTION 907.1.2 OF THE 2018 INTERNATIONAL BUILDING CODE, NEW JERSEY EDITION THE ELECTRICAL CONTRACTOR IS REQUIRED TO SUBMIT FIRE ALARM SYSTEM SHOP DRAWINGS. THE SHOP DRAWINGS SHALL INCLUDE FLOOR PANS; LOCATION OF ALARM–INITIATING DEVICES; LOCATION OF ALARM NOTIFICATION DEVICES; NOTIFICATION AUDIBILITY LEVELS; LOCATION OF CONTROL UNIT, TRANSPONDERS, AND NOTIFICATION POWER SUPPLIES; ANNUNCIATORS; POWER CONNECTION; BATTERY CALCULATIONS; CONDUCTOR TYPES AND SIZES; VOLTAGE DROP CALCULATIONS; MANUFACTURERS DATA SHEETS; DETAILS OF CEILING HEIGHT AND CONSTRUCTION; INTERFACE OF FIRE SAFETY CONTROL FUNCTIONS AND CLASSIFICATION OF THE SUPERVISING STATION. SHOP DRAWINGS SHALL BE SUBMITTED THE STONE HARBOR CONSTRUCTION ZONING OFFICIAL AND AUTHORITY HAVING JURISDICTION FOR REVIEW.

MOORE
CONSULTING ENGINEERS, LLC
457 Oakshade Road, Shamong, NJ 08088
Tel: (609) 268-0500 Fax: (609) 268-5050
JEFFREY A. MOORE
PROFESSIONAL ENGINEER
NJ LIC. NO. 24GE04051000
NJ AUTH. NO. 24GA28120100
MCE PORJCET #21037

PROJECT
STONE HARBOR BEACH PATROL HEAD QUARTERS
95TH STREET & BEACH
STONE HARBOR, NJ

TITLE
ELECTRICAL - COVERSHEET

CONTRACTOR SHALL CHECK & VERIFY ALL DIMENSIONS AND FIELD CONDITIONS PRIOR TO STARTING CONSTRUCTION.

06/17/2021

REV:	DESC:	DATE:
1	PLANS FOR CONSTR	08/09/21
	PERMIT ISSUE	06/17/21
	BID ISSUE	06/07/21

DRAWN BY:	RWF
CHECKED BY:	KHP
DATE:	04/20/21
SCALE:	AS NOTED

PROJECT No. 21037

E000

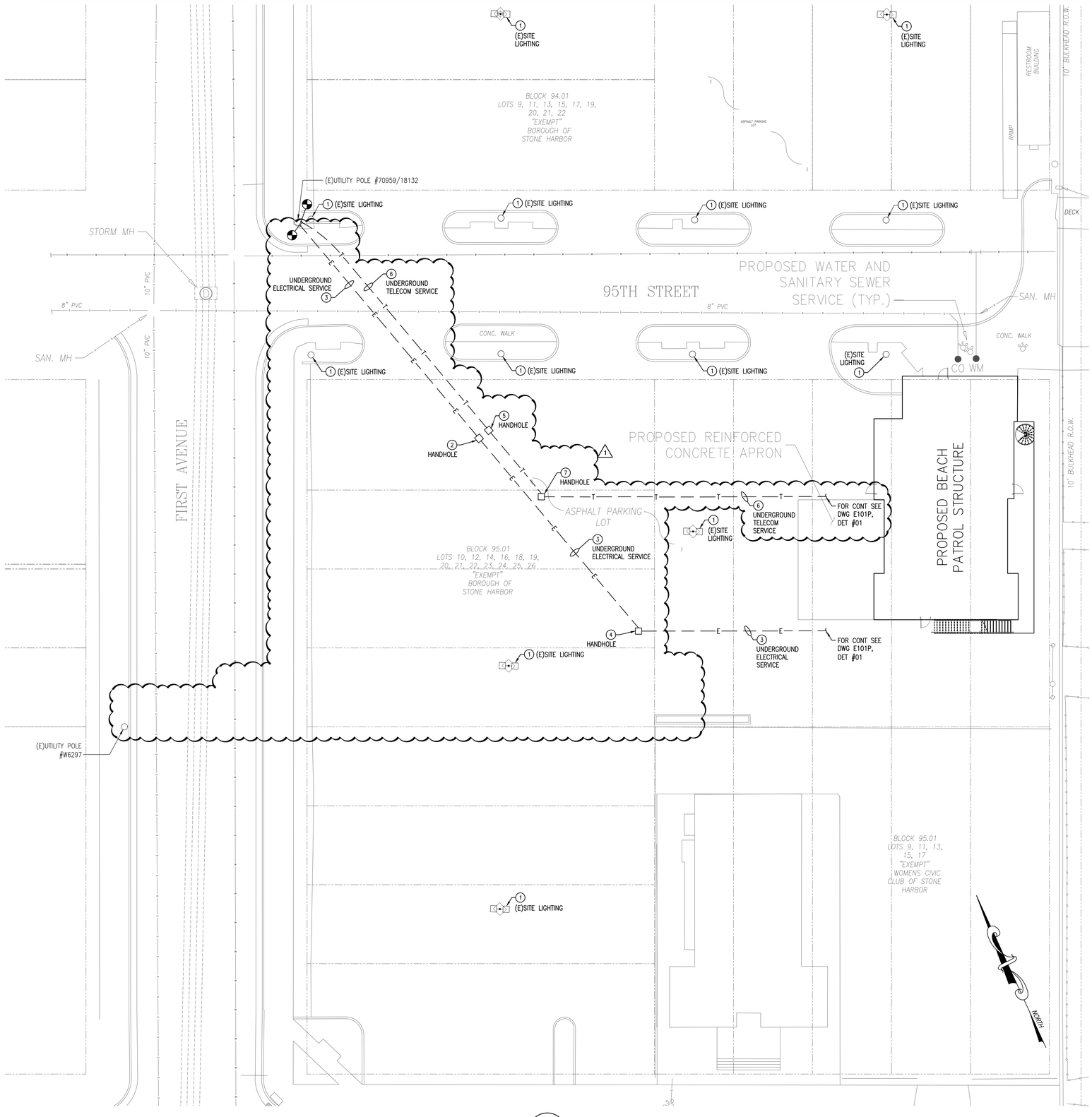

01 ELECTRICAL SITE PLAN
SCALE: 1/16" = 1' - 0"

DRAWING NOTES:

1. UON ALL EQUIPMENT AND WIRING IS NEW.
2. SEE SITE DRAWINGS FOR ADDITIONAL INFORMATION FOR ABOVE AND BELOW GRADE CIVIL SITE INFORMATION. COORDINATE ROUTING AND INSTALLATION OF UG CONDUITS W/ALL OTHER UG SERVICES W/GC, SITE CONTRACTOR AND ALL OTHER NEW AND EXISTING UTILITY SERVICE PROVIDERS.
3. CONTRACTOR SHALL MAKE ALL PROVISIONS REQUIRED BY THE UTILITY COMPANY FOR THE NEW ELECTRIC SERVICES INCLUDING TRANSFORMER PADS, DUCTBANK ENCASEMENT (WHERE REQUIRED), ETC. COORDINATE ALL SERVICE AND METERING WORK W/UTILITY COMPANY. CONTRACTOR SHALL INCLUDE IN HIS BID ALL COSTS AND FEES ASSOCIATED WITH THE PROVISION OF THE NEW ELECTRICAL SERVICES AND METERING.
4. COORDINATE ALL UTILITY WORK W/ATLANTIC CITY ELECTRIC. CONTRACTOR IS RESPONSIBLE FOR ALL WORK NECESSARY TO MEET ELECTRICAL UTILITY CO RQMTS. FOR ADDITIONAL INFORMATION CONTACT KENNETH ATWOOD OF ATLANTIC CITY ELECTRIC AT (609)463-3818 OR BY EMAIL AT KENNETH.ATWOOD@ATLANTICCITYELECTRIC.COM.
5. WIRING FOR EQUIPMENT SHALL BE 2 #12 + 1 #12 G, 3/4"C UON.
6. ALL CONDUCTORS SHALL BE COPPER (CU) UON.
7. UON ALL EXTERIOR JUNCTION BOXES, RACEWAYS, SUPPORTS, DISCONNECTS, ETC. EXPOSED TO THE ELEMENTS SHALL BE PVC, ALUMINUM EMT, OR STAINLESS STEEL. ALL HARDWARE EXPOSED TO ELEMENTS SHALL BE STAINLESS STEEL. PROVIDE SCHEDULE 80 PVC ONLY WHERE PERMITTED PER NEC AND AHJ.
8. ALL FITTINGS SHALL BE WATER TIGHT. EMT FITTINGS SHALL BE ALUMINUM RAINTIGHT TYPE.
9. ALL CONDUITS ENTERING AND LEAVING CT CABINET AND METER SHALL BE ROUTED THRU THE BOTTOM OF THE EQUIPMENT.
10. PROVIDE ALL SERVICE GROUNDING IN ACCORDANCE NJ ADOPTED VERSION OF 2017 EDITION OF THE NEC (ARTICLE 250), THE REQUIREMENTS OF THE UTILITY COMPANY AND AUTHORITY HAVING JURISDICTION. FOR ADDITIONAL INFORMATION SEE DETAIL 03 ON DWG E200.
11. CONFIRM ALL DEVICE AND EQUIPMENT LOCATIONS W/GC, ARCH, SITE CONTRACTOR AND OWNER PRIOR TO ANY PURCHASE OR ROUGH-IN.
12. CONFIRM ALL POWER OVERCURRENT PROTECTION, WIRING AND DEVICE/DISCONNECT REQUIREMENTS FOR ALL EQUIPMENT PRIOR TO ROUGH-IN AND REPORT ANY DISCREPANCY WITH THE DESIGN TO THE ARCHITECT AND OWNER FOR RESOLUTION.
13. PRE-MANUFACTURED ALUMINUM JACKETED METAL-CLAD CABLE (MC) MAY BE UTILIZED FOR ALL NORMAL BRANCH CIRCUITS IN DRY HOLLOW STUD WALL LOCATIONS, ABOVE ACCESSIBLE CEILINGS AND WHERE PERMITTED BY ARTICLE #330 OF THE NATIONAL ELECTRICAL CODE ONLY. MINIMUM CONDUCTOR SIZE SHALL BE NO. 12 AWG COPPER WITH INTEGRAL GREEN INSULATED CONTINUOUS GROUND CONDUCTOR AND BARE BONDING CONDUCTOR IN DIRECT CONTACT WITH OUTER METAL JACKET.
14. EC SHALL FIRE CAULK ALL CONDUIT PENETRATIONS IN FIRE WALLS TO MAINTAIN FIRE WALL RATING.
15. COORDINATE FINAL LOCATIONS OF ALL TELECOM DEMARK LOCATIONS W/GC, ARCH, OWNER AND OWNERS TELECOM VENDORS PRIOR TO ANY PURCHASE OR ROUGH-IN.
16. ALL CONDUITS TRAVELING FROM OUTDOORS TO INDOORS AND FROM A WARM ENVIRONMENT TO COLD SHALL BE VAPOR SEALED TO PREVENT CONDENSATION BUILDUP. THE SEAL SHALL BE A CONDUIT BODY OR JUNCTION BOX LOCATED ON THE HIGH TEMPERATURE SIDE OF THE TRANSITION SEALED WITH ELECTRICAL DUCT SEAL OR A NON-LATEX, CLOSED CELL, EXPANDING FOAM SEALANT LISTED FOR THE PURPOSE, INSTALLED IN THE CONDUIT ENTERING THE COLDER SPACE.
17. ALL SITE LIGHTING SHALL BE CIRCUITED VIA A TIMECLOCK AND DEFINITE PURPOSE FAIL-SAFE CONTACTOR LOCATED IN SECOND FLOOR ELECTRICAL CLOSET. PROVIDE A PHOTOCELL LOCATED ON ROOF AND ANY MISC APPURTENANCES REQUIRED FOR A FULLY FUNCTIONING AUTOMATIC ON CODE COMPLIANT LTG CONTROL SYSTEM. FOR ADDITIONAL INFORMATION SEE DETAIL #01 ON DWG E102P.
18. PROVIDE ALL DISCONNECT SWITCHES AS HEAVY-DUTY, LOCKABLE TYPE, NEMA 4X, RATED WITH VOLTAGE AS REQUIRED WITH AMPS AND QUANTITY OF POLES INDICATED.
19. PROVIDE PERMANENTLY FIXED LABELING OF SUFFICIENT DURABILITY SUITABLE TO WITHSTAND THE ENVIRONMENT FOR OF ALL DISCONNECT SWITCHES DESCRIBING THE EQUIPMENT BEING SERVED. SUBMIT FOR REVIEW AND APPROVAL PRIOR TO PURCHASE.
20. PER CURRENT ADOPTED FEMA PUBLICATION P-348, ON ALL CONTROL AND UTILIZATION EQUIPMENT (I.E RECEPTACLES, SWITCHES, DISCONNECTS, ETC.) SHALL BE LOCATED 2' ABOVE DESIGN FLOOD PLAIN. THESE DEVICES SHALL BE FED IN NON-CORROSIVE CONDUIT AND BOX SYSTEM, RAN VERTICALLY FROM ABOVE. CONFIRM DESIGN FLOOD PLAIN ELEVATION WITH CIVIL ENGINEER AND AHJ PRIOR TO ANY PURCHASE OR ROUGH-IN.
21. COORDINATE THE PROVISION OF THE TELEPHONE SERVICE ENTRANCE RACEWAY W/RESPECTIVE UTILITY COMPANY. CONTRACTOR SHALL COORDINATE AND INCLUDE IN HIS BID ALL FEES ASSOCIATED WITH ALL UTILITY WORK. INSTALLATION SHALL MEET ALL UTILITY CO REQUIREMENTS.
22. ALL BURIED CONDUIT SHALL BE AT A MINIMUM OF 24" BELOW FINISHED GRADE. PROVIDE WARNING TAPE APPROXIMATELY 12" ABOVE THE BURIED CONDUIT(S) FOR THE ENTIRE BURIED LENGTH.

KEY NOTES:

1. (1) EC SHALL INTERCEPT EXISTING LTG RACEWAY AND WIRE AND EXTEND IN KIND BACK TO PNL HP2, CIRCUITS 21,23; 43,45; AND 44,46. LTG SHALL BE CONTROLLED BY TIMECLOCK LOCATED IN SECOND FLR ELECTRICAL CLOSET 208A. COORDINATE ALL WORK W/GC, SITE CONTRACTOR AND OWNER PRIOR TO PURCHASE OR ROUGH-IN.
2. (2) EC SHALL PROVIDE UL LISTED, GASKETED, 25" X 15" HANDHOLE W/ANSI/SCTE RATING TIER 22 WITH STAINLESS STEEL HARDWARE. HANDHOLE SHALL BE MFR BY QUAZITE AS #PG2515HH0017. PROVIDE W/EXTRA DUTY TWO BOLT TYPE GASKETED COVER MFR BY QUAZITE AS #PG2515BG24 W/ELECTRIC SERVICE LOGO. EC SHALL COORDINATE EXACT LOCATION AND CONFIRM COVER LOGO W/GC, OWNER, UTILITY PROVIDER AND AHJ PRIOR TO PURCHASE OR ROUGH-IN.

1

3. (3) UNDERGROUND ELEC SERVICE ENTRANCE RACEWAY SIZED W/WIRES INDICATED ON SINGLE LINE DIAGRAM. RACEWAY LOCATED BENEATH AREAS SUBJECT TO VEHICLE TRAFFIC SHALL BE MINIMUM BURIAL DEPTH OF 2'-0" WITH TRACE TAPE ABOVE. COORDINATE LOCATION AND REQUIREMENTS W/GC, SITE CONTRACTOR, OWNER, UTILITY PROVIDER AND AHJ PRIOR TO ANY PURCHASE OR ROUGH-IN. FOR ADDITIONAL INFORMATION SEE SINGLE LINE DIAGRAM DETAILS #01 ON DWG E200, AND UNDERGROUND SERVICE ENTRANCE DETAIL #03 ON DWG E201.
4. (4) EC SHALL PROVIDE UL LISTED, GASKETED, 25" X 15" HANDHOLE W/ANSI/SCTE RATING TIER 22 WITH STAINLESS STEEL HARDWARE. HANDHOLE SHALL BE MFR BY QUAZITE AS #PG3024HH0017. PROVIDE W/EXTRA DUTY TWO BOLT TYPE GASKETED COVER MFR BY QUAZITE AS #PG3024BG24 W/ELECTRIC SERVICE LOGO. EC SHALL COORDINATE EXACT LOCATION AND CONFIRM COVER LOGO W/GC, OWNER, UTILITY PROVIDER AND AHJ PRIOR TO PURCHASE OR ROUGH-IN.
5. (5) EC SHALL PROVIDE UL LISTED, GASKETED, 25" X 15" HANDHOLE W/ANSI/SCTE RATING TIER 22 WITH STAINLESS STEEL HARDWARE. HANDHOLE SHALL BE MFR BY QUAZITE AS #PG2515HH0017. PROVIDE W/EXTRA DUTY TWO BOLT TYPE GASKETED COVER MFR BY QUAZITE AS #PG2515BG24 W/TELECOM SERVICE LOGO. EC SHALL COORDINATE EXACT LOCATION AND CONFIRM COVER LOGO W/GC, OWNER, UTILITY PROVIDER AND AHJ PRIOR TO PURCHASE OR ROUGH-IN.
6. (6) UNDERGROUND TELECOM SERVICE ENTRANCE RACEWAY SIZED AS (2) 4 " PVC CONDUITS W/PULL-LINE. RACEWAY LOCATED BENEATH AREAS SUBJECT TO VEHICLE TRAFFIC SHALL BE MINIMUM BURIAL DEPTH OF 2'-0" WITH TRACE TAPE ABOVE. COORDINATE LOCATION AND REQUIREMENTS W/GC, SITE CONTRACTOR, OWNER, UTILITY PROVIDER AND AHJ PRIOR TO ANY PURCHASE OR ROUGH-IN. FOR ADDITIONAL INFORMATION SEE DETAIL #01 ON DWG E101P.
7. (7) EC SHALL PROVIDE UL LISTED, GASKETED, 25" X 15" HANDHOLE W/ANSI/SCTE RATING TIER 22 WITH STAINLESS STEEL HARDWARE. HANDHOLE SHALL BE MFR BY QUAZITE AS #PG3024HH0017. PROVIDE W/EXTRA DUTY TWO BOLT TYPE GASKETED COVER MFR BY QUAZITE AS #PG3024BG24 W/TELECOM SERVICE LOGO. EC SHALL COORDINATE EXACT LOCATION AND CONFIRM COVER LOGO W/GC, OWNER, UTILITY PROVIDER AND AHJ PRIOR TO PURCHASE OR ROUGH-IN.

MOORE
CONSULTING ENGINEERS, LLC
457 Oakshade Road, Shamong, NJ 08088
Tel: (609) 268-0500 Fax: (609) 268-5050
JEFFREY A. MOORE
PROFESSIONAL ENGINEER
NJ LIC. NO. 24GE04615000
NJ AUTH. NO. 24GA28120100
MCE PORJCET #21037

PROJECT
STONE HARBOR BEACH PATROL HEAD QUARTERS
95TH STREET & BEACH
STONE HARBOR, NJ

TITLE
ELECTRICAL SITE PLAN

CONTRACTOR SHALL CHECK & VERIFY ALL DIMENSIONS AND FIELD CONDITIONS PRIOR TO STARTING CONSTRUCTION.

06/17/2021

REV:	DESC:	DATE:
1	PLANS FOR CONSTR	08/09/21
	PERMIT ISSUE	06/17/21
	BID ISSUE	06/07/21

DRAWN BY:	RWF
CHECKED BY:	KHP
DATE:	04/20/21
SCALE:	AS NOTED

PROJECT No. 21037

E100

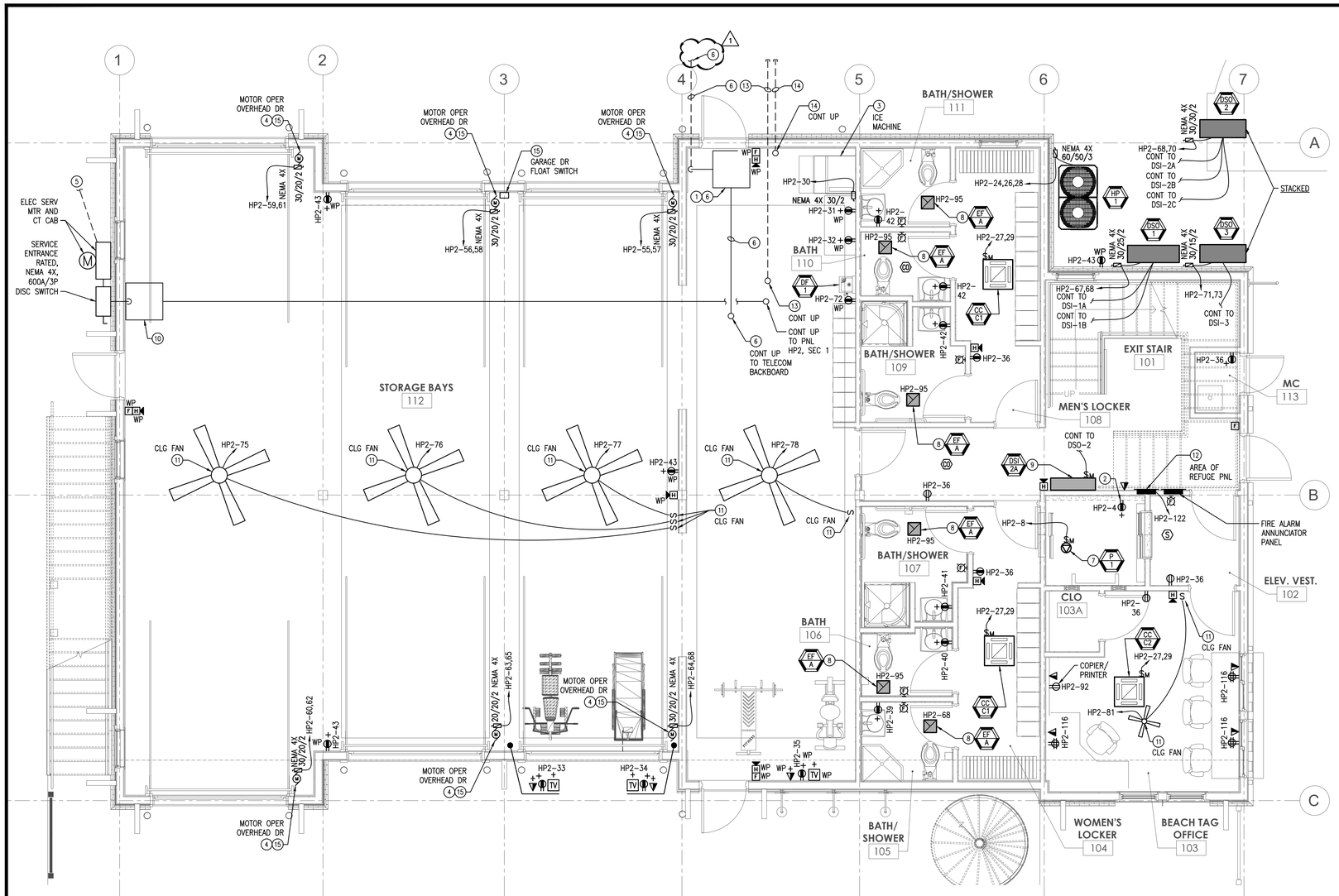

01 ELECTRICAL FIRST FLOOR PLAN – POWER
SCALE: 1/4" = 1' – 0"

DRAWING NOTES:

1. CONFIRM ALL DEVICE & EQUIPMENT LOCATIONS PRIOR TO ROUGH-IN.
2. CONTRACTOR SHALL CONFIRM ALL POWER OVERCURRENT PROTECTION WIRING AND DEVICE/DISCONNECT REQUIREMENTS FOR ALL EQUIPMENT PRIOR TO ROUGH-IN AND REPORT ANY DISCREPANCIES WITH THE DESIGN TO THE ARCHITECT/ENGINEER FOR RESOLUTION.
3. ALL DISCONNECT SWITCHES SHALL BE HEAVY-DUTY, VOLTAGE AS REQUIRED, AMPS, FUSING & POLES AS INDICATED. UNLESS OTHERWISE NOTED ENCLOSURES: EXTERIOR = NEMA 4X, INTERIOR = NEMA 1.
4. WIRING FOR EQUIPMENT SHALL BE 2#12+1#12G, 3/4" C UNLESS INDICATED OTHERWISE.
5. PROVIDE LOCKABLE IN-USE WEATHERPROOF (WP) EXTRA DUTY COVER FOR ALL EXTERIOR RECEPTACLES.
6. WHERE OUTLET BOXES ARE INSTALLED ON OPPOSITE SIDES OF FIRE-RATED WALLS/PARTITIONS SPACED LESS THAN 24" APART, PROVIDE UL CATEGORY CLIV/OSCN WALL OPENING PROTECTIVE MATERIAL (PUTTY PACKS) INSTALLED ON BOXES PER UL LISTING REQUIREMENTS. OUTLET BOXES SHALL NOT BE INSTALLED BACK TO BACK.
7. PROVIDE ALL CIRCUITS AND TIE-INS TO FIRE ALARM SYSTEM FROM ALL TAMPER AND FLOW TYPE DEVICES PROVIDED BY THE FIRE PROTECTION CONTRACTOR. CONFIRM LOCATIONS AND QUANTITIES WITH CONTRACTOR PRIOR TO ANY PURCHASE OR ROUGH-IN WORK.
8. PROVIDE ALL CIRCUITS AND TIE-INS TO ACCESS CONTROL SYSTEM FOR RELEASE OF ELECTRIC LOCKS. ALL DOORS SHALL REMAIN UNLOCKED UNTIL FIRE ALARM SYSTEM HAS BEEN RESET. CONFIRM LOCATIONS AND QUANTITIES W/GC, ARCH, OWNER, ACCESS CONTROL SYSTEM VENDOR AND AHJ PRIOR TO ANY PURCHASE OR ROUGH-IN.
9. ALL CONDUITS TRAVELING FROM OUTDOORS TO INDOORS SHALL BE VAPOR SEALED TO PREVENT CONDENSATION BUILDUP. THE SEAL SHALL BE A CONDUIT BODY OR JUNCTION BOX LOCATED ON THE HIGH TEMPERATURE SIDE OF THE TRANSITION SEALED W/ELECTRICAL DUCT SEAL OR A NON-LATEX, CLOSED CELL, EXPANDING FOAM SEALANT LISTED FOR THE PURPOSE, INSTALLED IN THE CONDUIT ENTERING THE COLDER SPACE.
10. EC SHALL COORDINATE FINAL LOCATIONS AND QUANTITIES OF FIRE PROTECTION SPRINKLER SYSTEM MONITORING DEVICES W/FIRE SPRINKLER VENDOR/CONTRACTOR, AUTHORITY HAVING JURISDICTION AND FIRE ALARM SYSTEM VENDOR PRIOR TO ANY PURCHASE OR ROUGH-IN.
11. EC SHALL PROVIDE POWER FOR HVAC CONTROLS AND TRANSFORMERS – COORDINATE W/MC.
12. COORDINATE ALL UTILITY WORK W/ATLANTIC CITY ELECTRIC. CONTRACTOR IS RESPONSIBLE FOR ALL WORK NECESSARY TO MEET ELECTRICAL UTILITY CO RQMTS. FOR ADDITIONAL INFORMATION CONTACT KENNETH ATWOOD OF ATLANTIC CITY ELECTRIC AT (609)463-3818 OR BY EMAIL AT KENNETH.ATWOOD@ATLANTICCITYELECTRIC.COM.
13. PER CURRENT ADOPTED FEMA PUBLICATION P-348, ON ALL CONTROL AND UTILIZATION EQUIPMENT (I.E RECEPTACLES, SWITCHES, DISCONNECTS, ETC.) SHALL BE LOCATED 2' ABOVE DESIGN FLOOD PLAIN. THESE DEVICES SHALL BE FED IN NON-CORROSIVE CONDUIT AND BOX SYSTEM, RAN VERTICALLY FROM ABOVE. CONFIRM DESIGN FLOOD PLAIN ELEVATION WITH CIVIL ENGINEER AND AHJ PRIOR TO ANY PURCHASE OR ROUGH-IN.
14. UON ALL EXTERIOR JUNCTION BOXES, RACEWAYS, SUPPORTS, DISCONNECTS, ETC. EXPOSED TO THE ELEMENTS SHALL BE PVC OR STAINLESS STEEL. ALL HARDWARE EXPOSED TO ELEMENTS SHALL BE STAINLESS STEEL.
15. ALL CONDUITS ENTERING AND LEAVING CT CABINET AND METER SHALL BE ROUTED THRU THE BOTTOM OF THE EQUIPMENT.
16. PRE-MANUFACTURED ALUMINUM JACKETED METAL-CLAD CABLE (MC) MAY BE UTILIZED FOR ALL NORMAL BRANCH CIRCUITS IN DRY HOLLOW STUD WALL LOCATIONS, ABOVE ACCESSIBLE CEILINGS AND WHERE PERMITTED BY ARTICLE #330 OF THE NATIONAL ELECTRICAL CODE ONLY. MINIMUM CONDUCTOR SIZE SHALL BE NO. 12 AWG COPPER WITH INTEGRAL GREEN INSULATED CONTINUOUS GROUND CONDUCTOR AND BARE BONDING CONDUCTOR IN DIRECT CONTACT WITH OUTER METAL JACKET.
16. UON ALL EXTERIOR JUNCTION BOXES, RACEWAYS, SUPPORTS, DISCONNECTS, ETC. EXPOSED TO THE ELEMENTS SHALL BE PVC, ALUMINUM EMT, OR STAINLESS STEEL. ALL HARDWARE EXPOSED TO ELEMENTS SHALL BE STAINLESS STEEL.
17. ALL FITTINGS SHALL BE WATER TIGHT. EMT FITTINGS SHALL BE ALUMINUM RAINTIGHT TYPE. PROVIDE SCHEDULE 80 PVC ONLY WHERE PERMITTED PER NEC AND AHJ.

KEY NOTES:

1. EC SHALL PROVIDE NEMA 4X RATED 30" X 30" X 12" TELECOM PULL BOX W/GASKETED SCREW COVER. PULL BOX SHALL BE INSTALLED TIGHT TO STRUCTURE ABOVE W/ACCESS PNL BELOW. COORDINATE SIZE AND LOCATION W/ GC, ARCH, OWNER, AND OWNERS IT PROVIDER(S) PRIOR TO PURCHASE OR ROUGH-IN.
2. PROVIDE DUPLEX RECEPTACLE WITHIN REACH OF DOOR OPENING IN ELEVATOR PIT. COORDINATE LOCATION W/GC, AND ELEV INSTALLER PRIOR TO ROUGH-IN.
3. EC SHALL COORDINATE LOCATION AND POWER REQUIREMENTS FOR ICE MACHINE E/GC, ARCH AND OWNER PRIOR TO PURCHASE OR ROUGH-IN.
4. EC SHALL COORDINATE LOCATION AND POWER REQUIREMENTS FOR MOTOR OPERATED OVERHEAD DOOR W/GC, ARCH AND OWNER PRIOR TO PURCHASE OR ROUGH-IN.
5. FOR CONTINUATION OF INCOMING ELECTRICAL SERVICE SEE DETAIL #01 ON DWG E100.
6. EC SHALL PROVIDE TELECOM RACEWAY SYSTEM CONSISTING OF (2) 4" PVC CONDUITS W/PULL-BOX AND PULL-LINE AND CAPPED ON BOTH ENDS. EXTENDED RACEWAY SYSTEM FROM TELECOM BACKBOARD LOCATED ON SECOND FLR TO UTILITY POLL. ON BUILDING INTERIOR KEEP RACEWAY TIGHT TO STRUCTURE ABOVE. FOR ADDITIONAL INFORMATION SEE DWG E100 AND E102P. COORDINATE LOCATION OF RACEWAY W/GC, SITE CONTRACTOR, OWNERS SERVICE PROVIDER(S), STRUCTURAL DWGS, ARCHITECTURAL DWGS, OWNER AND OWNERS IT CONTRACTOR.
7. EC SHALL WIRE ELEVATOR SUMP W/INTEGRAL OIL-MINDER AND ALARM. COORDINATE LOCATION AND CONNECTION REQUIREMENTS W/GC, PC, AND ARCH PRIOR TO ANY PURCHASE OR INSTALLATION.
8. EC SHALL PROVIDE ALL INTERCONNECTING WIRING AND MISC APPURTENANCES FOR CONTROL OF EXHAUST FAN BY LIGHTING CONTROLS CONTROLS WITHIN THE SPACE. FOR ADDITIONAL INFORMATION SEE DETAIL #01 ON DWG E101L. COORDINATE CONTROLS W/GC AND MC PRIOR TO PURCHASE OR ROUGH-IN.
9. EC SHALL PROVIDE TOGGLE TYPE MOTOR RATED DISCONNECT SWITCH. COVERPLATE SHALL BE FLUSH WITH FINISHED SURFACE.
10. EC SHALL PROVIDE A NEMA 4X RATED 24" X 24" X 6" PULL-BOX W/GASKETED SCREW COVER. BOX SHALL BE MOUNTED TIGHT TO STRUCTURE W/ACCESS PNL BELOW. COORDINATE LOCATION W/GC AND ARCH PRIOR TO PURCHASE OR ROUGH-IN.
11. EC SHALL PROVIDE ALL INTERCONNECTING WIRING AND MISC APPURTENANCES FOR POWER SUPPLY AND CONTROL OF CEILING FAN W/LIGHT PROVIDED BY GC. COORDINATE LOCATIONS AND CONTROLS W/GC AND OWNER PRIOR TO PURCHASE OR ROUGH-IN.
12. EC SHALL PROVIDE ALL POWER, EQUIPMENT AND MISC DEVICES FOR AREA OF REFUGE SYSTEM. COORDINATE EQUIPMENT LOCATIONS AND POWER REQUIREMENTS W/GC, ARCH, OWNER AND AHJ PRIOR TO ANY PURCHASE OR ROUGH-IN.
13. EC SHALL PROVIDE RACEWAY CAPPED ON BOTH ENDS W/PULL-LINE FROM FUTURE ATS TO AREA 5'-0" FROM FOUNDATION. FOR ADDITIONAL INFORMATION SEE DETAIL #01 ON DWG E102P AND DETAIL #01 ON DWG E200. COORDINATE RACEWAY LOCATIONS W/GC, ARCH, SITE CONTRACTOR AND OWNER PRIOR TO ROUGH-IN.
14. EC SHALL PROVIDE RACEWAY CAPPED ON BOTH ENDS W/PULL-LINE FROM PANEL HP2, SECTION 3 TO AREA 5'-0" FROM FOUNDATION. FOR ADDITIONAL INFORMATION SEE DETAIL #01 ON DWG E102P AND DETAIL #01 ON DWG E200. COORDINATE RACEWAY LOCATIONS W/GC, ARCH, SITE CONTRACTOR AND OWNER PRIOR TO ROUGH-IN.
15. EC SHALL PROVIDE A WALL MOUNTED FLOAT SWITCH MOUNTED 6" AFF TO OPEN ALL GARAGE DOORS DURING A FLOODING EVENT. PROVIDE RELAYS, WIRING, MISC APPURTENANCES AND MAKE ALL FINAL CONNECTIONS TO GARAGE OPERATORS FOR A FULLY FUNCTIONAL SYSTEM. COORDINATE LOCATIONS AND REQUIREMENTS W/GC, ARCH AND OWNER PRIOR TO ANY PURCHASE OR ROUGH-IN.

MOORE
CONSULTING ENGINEERS, LLC
457 Oakshade Road, Shamong, NJ 08088
Tel: (609) 268-0500 Fax: (609) 268-5050
JEFFREY A. MOORE
PROFESSIONAL ENGINEER
NJ LIC. NO. 24GE05015000
NJ AUTH. NO. 24GA28120100
MCE PORJCET #21037

PROJECT
STONE HARBOR BEACH PATROL HEAD QUARTERS
95TH STREET & BEACH
STONE HARBOR, NJ

TITLE
ELECTRICAL FIRST FLOOR PLAN - POWER

CONTRACTOR SHALL CHECK & VERIFY ALL DIMENSIONS AND FIELD CONDITIONS PRIOR TO STARTING CONSTRUCTION.

06/17/2021

REV:	DESC:	DATE:
1	PLANS FOR CONSTR	08/09/21
	PERMIT ISSUE	06/17/21
	BID ISSUE	06/07/21

DRAWN BY:	RWF
CHECKED BY:	KHP
DATE:	04/20/21
SCALE:	AS NOTED

PROJECT No. 21037

E101P

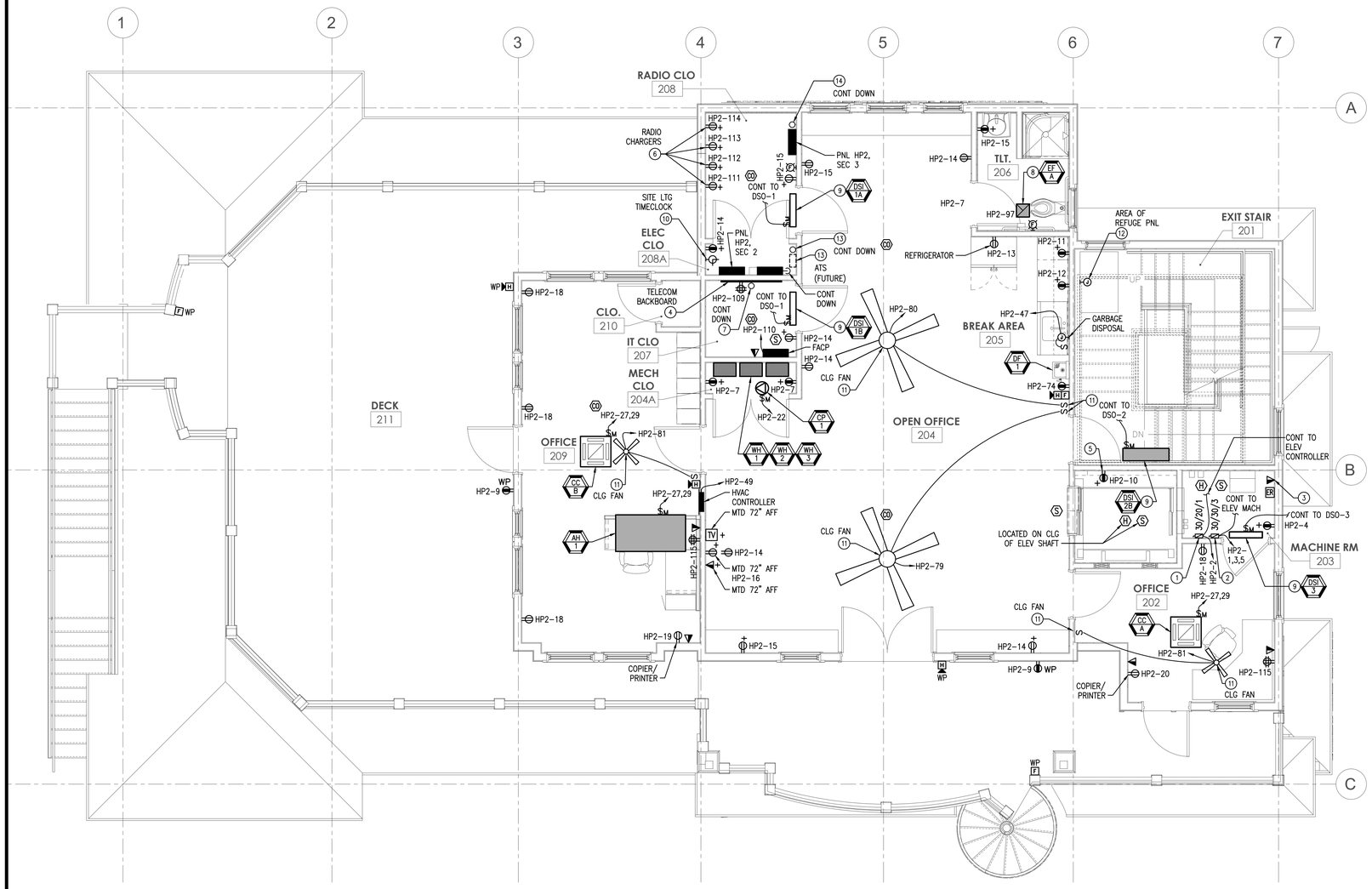

01 ELECTRICAL SECOND FLOOR PLAN – POWER
SCALE: 1/4" = 1' – 0"

DRAWING NOTES:

1. CONFIRM ALL DEVICE & EQUIPMENT LOCATIONS PRIOR TO ROUGH–IN.
2. CONTRACTOR SHALL CONFIRM ALL POWER OVERCURRENT PROTECTION WIRING AND DEVICE/DISCONNECT REQUIREMENTS FOR ALL EQUIPMENT PRIOR TO ROUGH–IN AND REPORT ANY DISCREPANCIES WITH THE DESIGN TO THE ARCHITECT/ENGINEER FOR RESOLUTION.
3. ALL DISCONNECT SWITCHES SHALL BE HEAVY–DUTY, VOLTAGE AS REQUIRED, AMPS, FUSING & POLES AS INDICATED. UNLESS OTHERWISE NOTED ENCLOSURES: EXTERIOR = NEMA 4X, INTERIOR = NEMA 1.
4. WIRING FOR EQUIPMENT SHALL BE 2#12+1#12G, 3/4" C UNLESS INDICATED OTHERWISE.
5. PROVIDE LOCKABLE IN–USE WEATHERPROOF (WP) EXTRA DUTY COVER FOR ALL EXTERIOR RECEPTACLES.
6. WHERE OUTLET BOXES ARE INSTALLED ON OPPOSITE SIDES OF FIRE–RATED WALLS/PARTITIONS SPACED LESS THAN 24" APART, PROVIDE UL CATEGORY CLIV/QSCN WALL OPENING PROTECTIVE MATERIAL (PUTTY PACKS) INSTALLED ON BOXES PER UL LISTING REQUIREMENTS. OUTLET BOXES SHALL NOT BE INSTALLED BACK TO BACK.
7. PROVIDE ALL CIRCUITS AND TIE–INS TO FIRE ALARM SYSTEM FROM ALL TAMPER AND FLOW TYPE DEVICES PROVIDED BY THE FIRE PROTECTION CONTRACTOR. CONFIRM LOCATIONS AND QUANTITIES WITH CONTRACTOR PRIOR TO ANY PURCHASE OR ROUGH–IN WORK.
8. PROVIDE ALL CIRCUITS AND TIE–INS TO ACCESS CONTROL SYSTEM FOR RELEASE OF ELECTRIC LOCKS. ALL DOORS SHALL REMAIN UNLOCKED UNTIL FIRE ALARM SYSTEM HAS BEEN RESET. CONFIRM LOCATIONS AND QUANTITIES W/GC, ARCH, OWNER, ACCESS CONTROL SYSTEM VENDOR AND AHJ PRIOR TO ANY PURCHASE OR ROUGH–IN.
9. ALL CONDUITS TRAVELING FROM OUTDOORS TO INDOORS SHALL BE VAPOR SEALED TO PREVENT CONDENSATION BUILDUP. THE SEAL SHALL BE A CONDUIT BODY OR JUNCTION BOX LOCATED ON THE HIGH TEMPERATURE SIDE OF THE TRANSITION SEALED W/ELECTRICAL DUCT SEAL OR A NON–LATEX, CLOSED CELL, EXPANDING FOAM SEALANT LISTED FOR THE PURPOSE, INSTALLED IN THE CONDUIT ENTERING THE COLDER SPACE.
10. EC SHALL COORDINATE FINAL LOCATIONS AND QUANTITIES OF FIRE PROTECTION SPRINKLER SYSTEM MONITORING DEVICES W/FIRE SPRINKLER VENDOR/CONTRACTOR, AUTHORITY HAVING JURISDICTION AND FIRE ALARM SYSTEM VENDOR PRIOR TO ANY PURCHASE OR ROUGH–IN.
11. EC SHALL PROVIDE POWER FOR HVAC CONTROLS AND TRANSFORMERS – COORDINATE W/MC.
12. PER CURRENT ADOPTED FEMA PUBLICATION P–348, ON ALL CONTROL AND UTILIZATION EQUIPMENT (I.E RECEPTACLES, SWITCHES, DISCONNECTS, ETC.) SHALL BE LOCATED 2' ABOVE DESIGN FLOOD PLAIN. THESE DEVICES SHALL BE FED IN NON–CORROSIVE CONDUIT AND BOX SYSTEM, RAN VERTICALLY FROM ABOVE. CONFIRM DESIGN FLOOD PLAIN ELEVATION WITH CIVIL ENGINEER AND AHJ PRIOR TO ANY PURCHASE OR ROUGH–IN.
13. UON ALL EXTERIOR JUNCTION BOXES, RACEWAYS, SUPPORTS, DISCONNECTS, ETC. EXPOSED TO THE ELEMENTS SHALL BE PVC OR STAINLESS STEEL. ALL HARDWARE EXPOSED TO ELEMENTS SHALL BE STAINLESS STEEL.
14. PRE–MANUFACTURED ALUMINUM JACKETED METAL–CLAD CABLE (MC) MAY BE UTILIZED FOR ALL NORMAL BRANCH CIRCUITS IN DRY HOLLOW STUD WALL LOCATIONS, ABOVE ACCESSIBLE CEILINGS AND WHERE PERMITTED BY ARTICLE #330 OF THE NATIONAL ELECTRICAL CODE ONLY. MINIMUM CONDUCTOR SIZE SHALL BE NO. 12 AWG COPPER WITH INTEGRAL GREEN INSULATED CONTINUOUS GROUND CONDUCTOR AND BARE BONDING CONDUCTOR IN DIRECT CONTACT WITH OUTER METAL JACKET.
15. UON ALL EXTERIOR JUNCTION BOXES, RACEWAYS, SUPPORTS, DISCONNECTS, ETC. EXPOSED TO THE ELEMENTS SHALL BE PVC, ALUMINUM EMT, OR STAINLESS STEEL. ALL HARDWARE EXPOSED TO ELEMENTS SHALL BE STAINLESS STEEL.
16. ALL FITTINGS SHALL BE WATER TIGHT. EMT FITTINGS SHALL BE ALUMINUM RAINTIGHT TYPE. PROVIDE SCHEDULE 80 PVC ONLY WHERE PERMITTED PER NEC AND AHJ.

KEY NOTES:

(1) EC SHALL PROVIDE A 30A/1P DISCONNECT SWITCH FUSED AT 15A AND CONTINUE FEED TO ELEVATOR FOR POWER TO CAR LIGHTING, CAR TOP RECEPTACLE, AUXILIARY LIGHTING POWER AND VENTILATION. WIRE PER THE MANUFACTURER'S INSTRUCTIONS.

(2) PROVIDE BUSSMAN POWER MODULE SWITCH, SIZED AND FUSED TO MATCH ELEVATOR MANUFACTURER'S REQUIREMENTS (NOTE: BASIS OF DESIGN IS LULA TYPE 2 – 5 HP). PROVIDE W/OPTIONS T48 – CONTROL POWER TRANSFORMER, #R1 – FIRE SAFETY INTERFACE RELAY, #K – KEY TO TEST SWITCH, #G – PILOT INTERLOCK W/FIRE ALARM TO RECALL ELEVATOR AND SHUTDOWN POWER PER CODE REQUIREMENTS. COORDINATE ALL ELEVATOR WORK W/ELEVATOR MANUFACTURER. PROVIDE ALL INTERCONNECTING WIRING PER MANUFACTURER'S INSTRUCTIONS.

(3) PROVIDE TELECOM DEVICE WITHIN ELEV MACHINE ROOM. COORDINATE LOCATION W/GC, ELEV CONTRACTOR AND OWNERS TELECOM PROVIDER PRIOR TO ANY PURCHASE OR ROUGH–IN.

(4) PROVIDE 4' X 4' X 3/4" TELECOM SERVICES PLYWOOD BACKBOARD W/FIRE RETARDANT PAINT FOR TELECOM SERVICE(S) DEMARC. DISTRIBUTION SYSTEMS PROVIDED BY OTHERS. COORDINATE LOCATION W/GC, OWNER AND OWNERS TELECOM PROVIDERS PRIOR TO ANY PURCHASE OR ROUGH–IN WORK.

(5) PROVIDE DUPLEX RECEPTACLE WITHIN REACH OF DOOR OPENING AT TOP OF ELEV SHAFT. COORDINATE LOCATION W/GC, AND ELEV INSTALLER PRIOR TO ROUGH–IN.

(6) EC SHALL PROVIDE DEDICATED DUPLEX RECEPTACLE FOR RADIO CHARGER EQUIPMENT PROVIDED BY OWNER. COORDINATE EQUIPMENT LOCATION AND POWER REQUIREMENTS W/GC, ARCH, AND OWNER PRIOR TO PURCHASE OR ROUGH–IN.

1

(7) EC SHALL PROVIDE (2) 4" TELECOM CAPPED RACEWAYS W/PULL–LINE STUBBED UP 6" AFF. RACEWAY SHALL BE CONTINUOUS FROM TELECOM BACKBOARD TO UTILITY POLE. FOR ADDITIONAL INFORMATION SEE DETAIL #01 ON DWG E100 AND DETAIL #01 ON DWG E101P. COORDINATE LOCATION W/GC, OWNERS SERVICE PROVIDER(S), STRUCTURAL DWGS, ARCHITECTURAL DWGS, OWNER AND OWNERS IT CONTRACTOR.

(8) EC SHALL PROVIDE ALL INTERCONNECTING WIRING AND MISC APPURTENANCES FOR CONTROL OF EXHAUST FAN BY LIGHTING CONTROLS CONTROLS WITHIN THE SPACE. FOR ADDITIONAL INFORMATION SEE DETAIL #01 ON DWG E102L. COORDINATE CONTROLS W/GC AND MC PRIOR TO PURCHASE OR ROUGH–IN.

(9) EC SHALL PROVIDE TOGGLE TYPE MOTOR RATED DISCONNECT SWITCH. COVERPLATE SHALL BE FLUSH WITH FINISHED SURFACE.

(10) EC SHALL PROVIDE INTERMATIC ASTRONOMIC TIMECLOCK #ET8415C W/ FOUR(4) CIRCUITS, WIRING, DEFINITE PURPOSE FAIL–SAFE CONTACTORS, AND ALL MISC APPURTENANCES FOR A FULLY FUNCTIONAL SITE LTG CONTROL SYSTEM. TWO POLES SHALL BE USED FOR EACH SITE LTG CKT. FOR ADDITIONAL INFORMATION SEE DWG E300 FOR CKTS 43,45 & 44,48 ON PNL HP2. COORDINATE LOCATION AND PROGRAMMING W/GC. ARCH AND OWNER PRIOR TO PURCHASE OR ROUGH–IN.

(11) EC SHALL PROVIDE ALL INTERCONNECTING WIRING AND MISC APPURTENANCES FOR POWER SUPPLY AND CONTROL OF CEILING FAN W/LIGHT PROVIDED BY GC. COORDINATE LOCATIONS AND CONTROLS W/GC AND OWNER PRIOR TO PURCHASE OR ROUGH–IN.

(12) EC SHALL PROVIDE ALL POWER, EQUIPMENT AND MISC DEVICES FOR AREA OF REFUGE SYSTEM. COORDINATE EQUIPMENT LOCATIONS AND POWER REQUIREMENTS W/GC, ARCH, OWNER AND AHJ PRIOR TO ANY PURCHASE OR ROUGH–IN.

(13) EC SHALL PROVIDE RACEWAY CAPPED ON BOTH ENDS W/PULL–LINE FROM FUTURE ATS TO AREA 5'–0" FROM FOUNDATION. FOR ADDITIONAL INFORMATION SEE DETAIL #01 ON DWG E101P AND DETAIL #01 ON DWG E200. COORDINATE RACEWAY LOCATIONS W/GC, ARCH, SITE CONTRACTOR AND OWNER PRIOR TO ROUGH–IN.

(14) EC SHALL PROVIDE RACEWAY CAPPED ON BOTH ENDS W/PULL–LINE FROM PANEL HP2, SECTION 3 TO AREA 5'–0" FROM FOUNDATION. FOR ADDITIONAL INFORMATION SEE DETAIL #01 ON DWG E101P AND DETAIL #01 ON DWG E200. COORDINATE RACEWAY LOCATIONS W/GC, ARCH, SITE CONTRACTOR AND OWNER PRIOR TO ROUGH–IN.

MOORE
CONSULTING ENGINEERS, LLC
457 Oakshade Road Shamong, NJ 08088
Tel: (609) 268-0500 Fax: (609) 268-5050
JEFFREY A. MOORE
PROFESSIONAL ENGINEER
NJ AUTH. NO. 24GE05018000
NJ AUTH. NO. 24GA28120100
MCE PORJCET #21037

PROJECT
STONE HARBOR BEACH PATROL HEAD QUARTERS
95TH STREET & BEACH
STONE HARBOR, NJ

TITLE
ELECTRICAL SECOND FLOOR PLAN - POWER

CONTRACTOR SHALL CHECK & VERIFY ALL DIMENSIONS AND FIELD CONDITIONS PRIOR TO STARTING CONSTRUCTION.

06/17/2021

REV:	DESC:	DATE:
	BID ISSUE	06/07/21
	PERMIT ISSUE	06/17/21
1	PLANS FOR CONSTR	08/09/21

DRAWN BY:	RWF
CHECKED BY:	KHP
DATE:	04/20/21
SCALE:	AS NOTED

PROJECT No. 21037

E102P

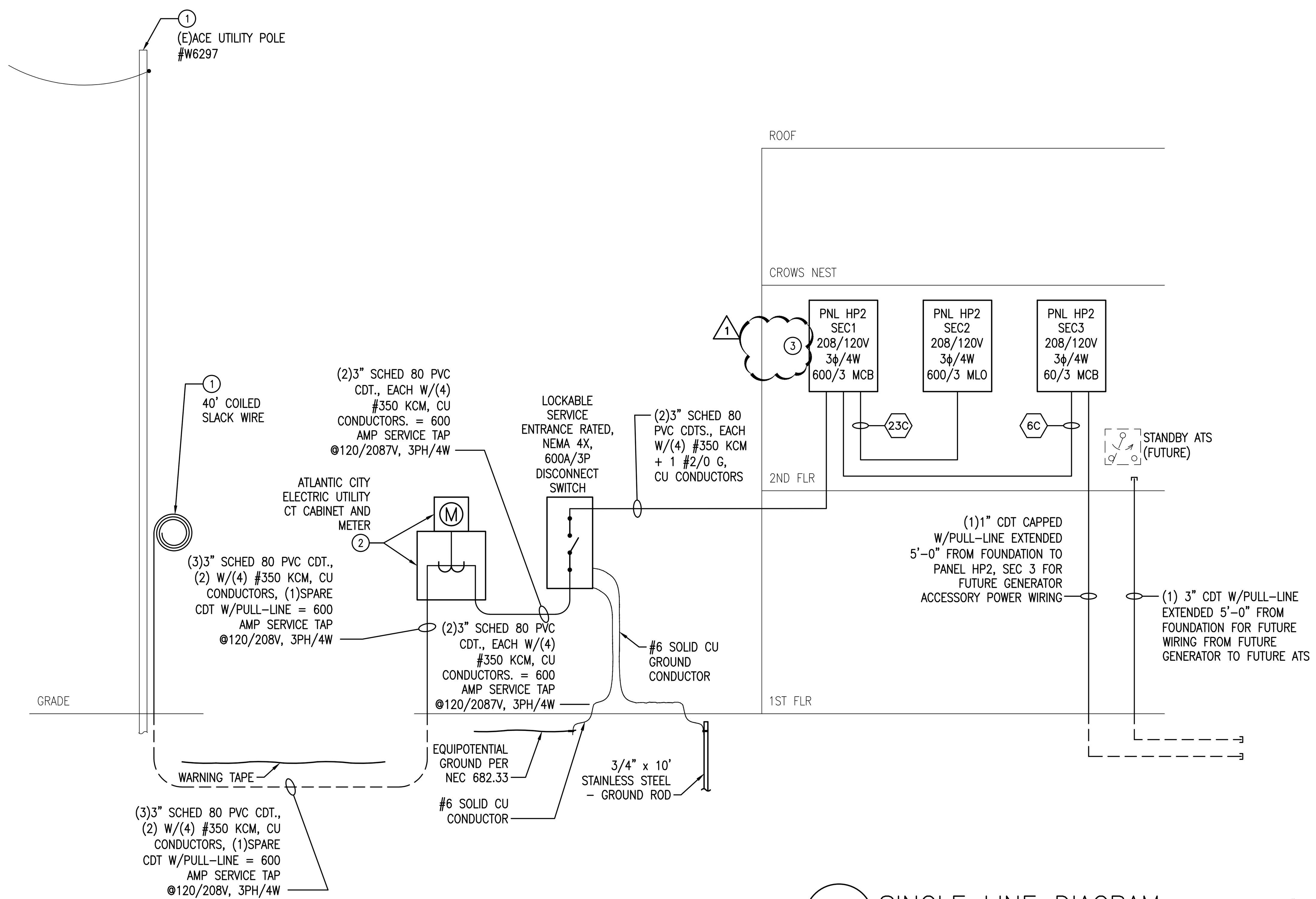

01 SINGLE LINE DIAGRAM
SCALE: NTS

DRAWING NOTES:

1. PROVIDE ALL SERVICE ENTRANCE AND GROUNDING IN ACCORDANCE WITH THE NJ ADOPTED VERSION OF THE 2017 NEC REQUIREMENTS, REQUIREMENTS OF ATLANTIC CITY ELECTRIC AND AUTHORITY HAVING JURISDICTION.
2. CONTRACTOR SHALL COORDINATE ALL SERVICE AND METERING WORK W/ATLANTIC CITY ELECTRIC. CONTRACTOR SHALL INCLUDE IN HIS BID ALL COSTS AND FEES ASSOCIATED W/THE PROVISION OF THE NEW UNDERGROUND ELECTRICAL SERVICE AND METERING. CONTRACTOR SHALL MAKE ALL PROVISIONS REQUIRED BY THE UTILITY COMPANY FOR THE NEW ELECTRIC SERVICES INCLUDING DUCTBANK, ENCASEMENT (WHERE REQUIRED), ETC. SEE CIVIL SITE PLAN FOR LOCATIONS AND ADDITIONAL INFORMATION.
3. UON ALL EXTERIOR JUNCTION BOXES, RACEWAYS, SUPPORTS, DISCONNECTS, ETC. EXPOSED TO THE ELEMENTS SHALL BE PVC OR STAINLESS STEEL. ALL HARDWARE EXPOSED TO ELEMENTS SHALL BE STAINLESS STEEL.
4. SEE KEY NOTES BELOW AND WIRE AND CONDUIT SIZING SCHEDULE ON DRAWING E301 FOR FEEDER SIZES.
5. ALL BURIED CONDUIT SHALL BE AT A MINIMUM OF 24" BELOW FINISHED GRADE. PROVIDE WARNING TAPE AS SHOWN, APPROXIMATELY 12" ABOVE THE BURIED CONDUIT(S) FOR THE ENTIRE BURIED LENGTH.
6. PROVIDE ALL GROUNDING IN ACCORDANCE WITH ARTICLE 250 OF THE NJ ADOPTED VERSION OF THE 2017 EDITION OF THE NEC AND AUTHORITY HAVING JURISDICTION.
7. UNLESS OTHERWISE NOTED CONTRACTOR SHALL PROVIDE NEMA 4X RATED LOCKABLE DISCONNECTS CAPABLE OF BEING LOCKED IN THE OPEN POSITION WITH PERMANENT LOCKING PROVISIONS WITH OR WITHOUT A LOCK. LOCKING HARDWARE SHALL MEET ALL REQUIREMENTS OF NEC 110.25.
8. EC SHALL PROVIDE LEGIBLE AND PERMANENT IDENTIFICATION OF DISCONNECTING MEANS. FIELD APPLIED IDENTIFICATION SHALL INDICATE PURPOSE OF EQUIPMENT OR DEVICE; SHALL BE PERMANENTLY AFFIXED; AND SHALL BE OF SUFFICIENT DURABILITY TO WITHSTAND THE ENVIRONMENT. HANDWRITTEN LABELS ARE UNACCEPTABLE. LABELING SHALL MEET ALL REQUIREMENTS OF NEC 110.22.
9. PER CURRENT ADOPTED FEMA PUBLICATION P-348, ON ALL CONTROL AND UTILIZATION EQUIPMENT (I.E RECEPTACLES, SWITCHES, DISCONNECTS, ETC.) SHALL BE LOCATED 2' ABOVE DESIGN FLOOD PLAIN. THESE DEVICES SHALL BE FED IN NON-CORROSIVE CONDUIT AND BOX SYSTEM, RAN VERTICALLY FROM ABOVE. CONFIRM DESIGN FLOOD PLAIN ELEVATION WITH CIVIL ENGINEER AND AHJ PRIOR TO ANY PURCHASE OR ROUGH-IN.

KEY NOTES

(1) EC SHALL COORDINATE ALL ELECTRIC SERVICE WORK WITH LOCAL ATLANTIC CITY ELECTRIC REQUIREMENTS. ROUTE UG SERVICE ENTRANCE WIRING TO UTILITY POLE. EXTEND SCHED 80 PVC CONDUIT RUN 10'-0" UP UTILITY POLE AND COIL 40'-0" OF SLACK WIRE AT TOP OF RACEWAY FOR TERMINATION BY UTILITY COMPANY.

(2) EC SHALL INSTALL SERVICE METERING, CT CABINET AND CT'S OBTAINED FROM ATLANTIC CITY ELECTRIC. MOUNTING HEIGHT TO BOTTOM OF METER AND ASSOCIATED SERVICE EQUIPMENT SHALL BE 11'-0" ABOVE SEA LEVEL (2'-0" ABOVE BASE FLOOD ELEVATION). FOR ADDITIONAL INFORMATION CONTACT KEN ATWOOD OF ACE AT 609 463-3818.

(3) EC SHALL PROVIDE PERMANENTLY MOUNTED PLACARD SHOWING AIC RATING, LEVEL OF PPE REQUIRED, AND DATE CALCULATED.

LIGHTING CONTROL DEVICE SCHEDULE

SYMBOL	ACUITY CAT #	NOTES
[OS]H	WSX PDT	LINE-VOLTAGE WALL-MTD DUAL TECHNOLOGY W/MANUAL CONTROL BUTTON. COLOR BY ARCHITECT
D[OS]H	WSX PDT D	LINE-VOLTAGE WALL-MTD DUAL TECHNOLOGY W/MANUAL CONTROL BUTTON AND 0-10V DIMMING CAPABILITIES. COLOR BY ARCHITECT
DR[OS]H	WSX PDT 2P	DUAL-RELAY LINE-VOLTAGE WALL-MTD DUAL TECHNOLOGY W/MANUAL CONTROL BUTTON. COLOR BY ARCHITECT
L[OS]H	NWSX PDT	LOW-VOLTAGE WALL-MTD DUAL TECHNOLOGY W/MANUAL CONTROL BUTTON. COLOR BY ARCHITECT
[OS]	CMR PDT [9] OR [10]	LINE VOLTAGE CLG MTD. DUAL-TECH. SENSOR. COLOR BY ARCHITECT
L[OS]	CM PDT [9] OR [10]	LOW VOLTAGE CLG MTD. DUAL-TECH. SENSOR. COLOR BY ARCHITECT
[VS]H	WSX PDT SA	LINE-VOLTAGE WALL-MTD DUAL TECHNOLOGY W/MANUAL CONTROL BUTTON. COLOR BY ARCHITECT. ADJUST DIP SWITCH FOR MANUAL ON "VACANCY "OPERATION
D[VS]H	WSX PDT D SA	LINE-VOLTAGE WALL-MTD DUAL TECHNOLOGY W/MANUAL CONTROL BUTTON AND 0-10V DIMMING CAPABILITIES. COLOR BY ARCHITECT. ADJUST DIP SWITCH FOR MANUAL ON "VACANCY "OPERATION
L[VS]	CM PDT [9] OR [10]	LOW VOLTAGE CLG MTD. DUAL-TECH. SENSOR. COLOR BY ARCHITECT
[PP]	PP20	UNIVERSAL POWER PACK TO FEED LOW-VOLTAGE VACANCY SENSORS. SET POWER PACK TO MANUAL ON OPERATION
1[RC]	NPP16D	SINGLE RELAY 0-10V CEILING MOUNTED DIMMING ROOM CONTROLLER
2[RC]	NPP16D (x2)	DUAL-RELAY 0-10V CEILING MOUNTED DIMMING ROOM CONTROLLER
3[RC]	NPP16D (x3)	3-RELAY 0-10V CEILING MOUNTED DIMMING ROOM CONTROLLER
R[VS]	NCM PDT [9] OR [10]	LOW VOLTAGE CLG MTD. DUAL-TECH. ROOM CONTROLLER SENSOR. SET FOR MANUAL-ON OPERATION COLOR BY ARCHITECT.
R[OS]	NCM PDT	LOW VOLTAGE CLG MTD. DUAL-TECH. ROOM CONTROLLER SENSOR. COLOR BY ARCHITECT.
S^{LV}	SPODM	LOW VOLTAGE SWITCH FOR CONTROL OF POWER PACK BZ-250
	NPODM	LOW VOLTAGE SWITCH FOR CONTROL OF ROOM CONTROLLER. PROVIDE # OF BUTTONS AS REQUIRED
$S^{LV,D}$	NPODM DX	DIMMING LOW VOLTAGE SWITCH FOR CONTROL OF ROOM CONTROLLER
[ELCU]	ESRN / ESRB	EMERGENCY LIGHTING CONTROL UNIT
R[PS]	NCM ADCX	SINGLE ZONE DIMMING CLOSED LOOP ROOM CONTROLLER. PHOTOSENSOR FOR CONTROL OF ROOM CONTROLLER.

NOTES: WIRE ALL LIGHTING CONTROL DEVICES & POWER PACKS PER MANUFACTURER'S INSTRUCTIONS. MAKE ALL SETTING ADJUSTMENTS TO OCCUPANCY/VACANCY SENSORS NECESSARY FOR PROPER OPERATION PER MANUFACTURER'S INSTRUCTIONS AND OWNER'S PREFERENCES.

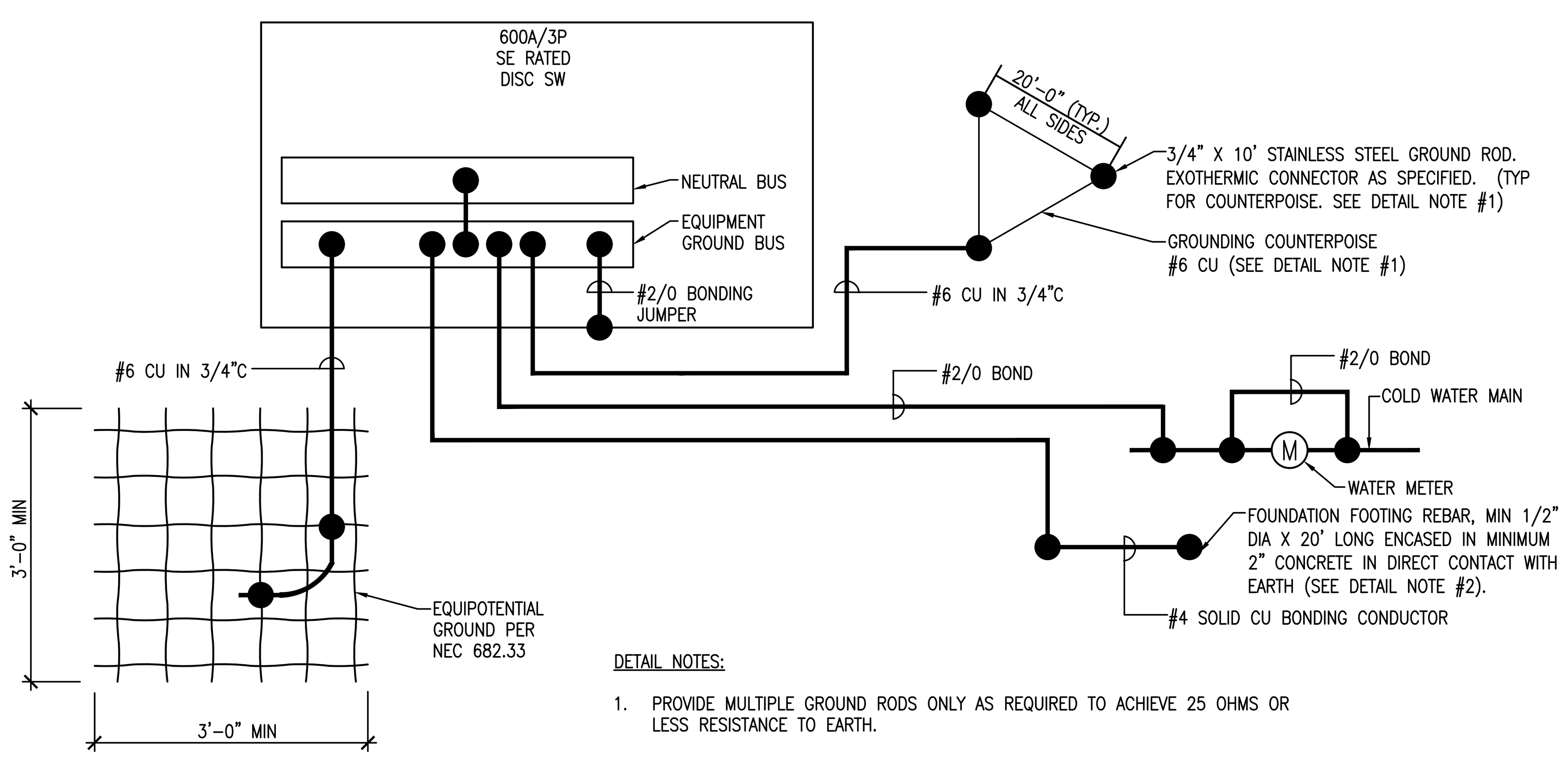

DETAIL NOTES:

1. PROVIDE MULTIPLE GROUND RODS ONLY AS REQUIRED TO ACHIEVE 25 OHMS OR LESS RESISTANCE TO EARTH.
2. BOND FOUNDATION REBAR TO GROUNDING ELECTRODE SYSTEM PER NEW JERSEY DCA BULLETIN NO 02-2 USING A CLAMP LISTED FOR THE PURPOSE (BLACKBURN #JDLI OR APPROVED LISTED EQUAL). THE BONDING POINT SHALL REMAIN EXPOSED UNTIL INSTALLATION IS INSPECTED AND APPROVED BY THE BUILDING CODE OFFICIAL.

02 ELECTRICAL GROUNDING DETAIL
SCALE: NTS

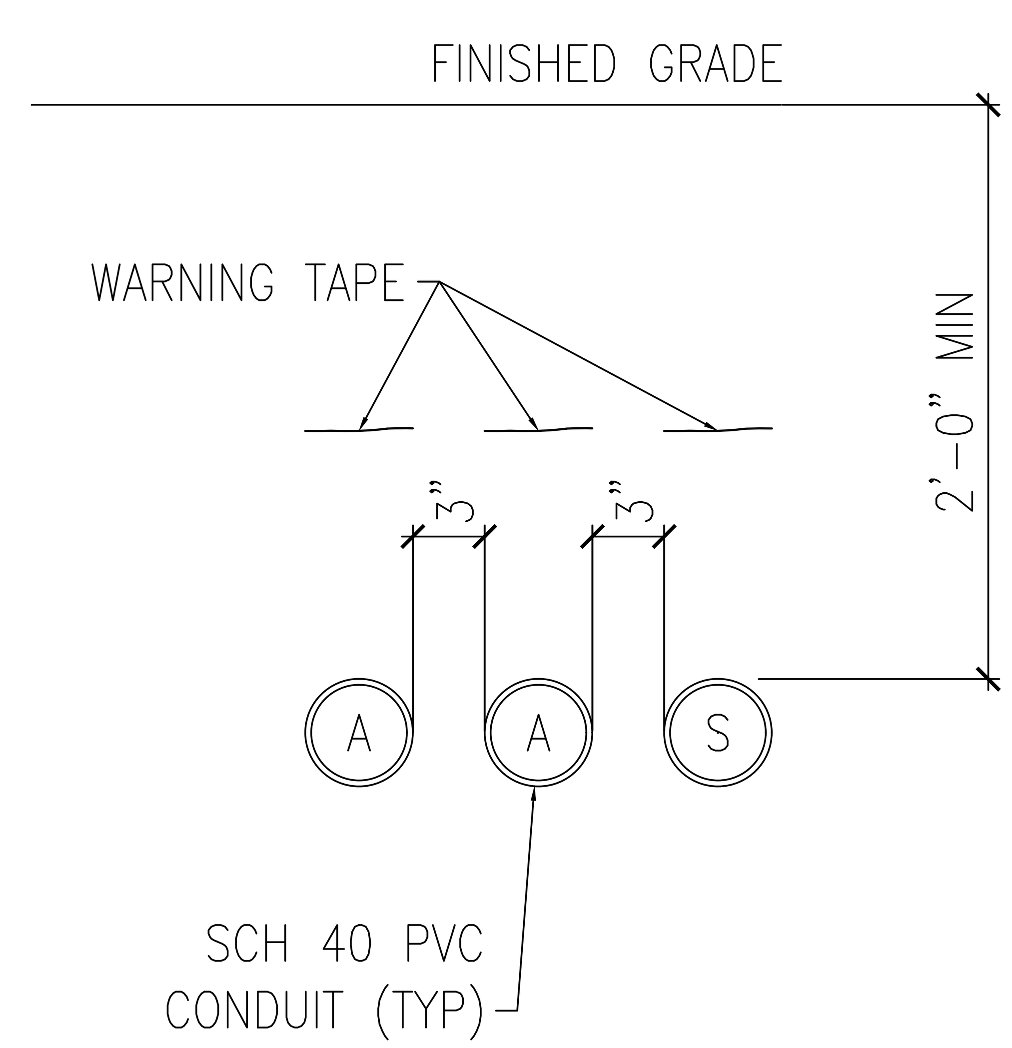

DETAIL NOTES:
1. "A" INDICATES ACTIVE
2. "SP" INDICATES SPARE

03 ELECTRICAL – UNDERGROUND SERVICE ENTRANCE DETAIL
SCALE: NTS

WIRE AND CONDUIT SIZING SCHEDULE (COPPER)

		WIRE SIZE (AWG/KCMIL)		NO. OF WIRES & CONDUIT SIZE IN INCHES		
AMPS	TAGS	CONDUCTOR PHASE & NEUTRAL	GROUND	A 1PH, 2W+G	B 1PH/3PH, 3W+G	C 3PH, 4W+G
15	1	14	14	3/4	3/4	3/4
20	2	12	12	3/4	3/4	3/4
30	3	10	10	3/4	3/4	3/4
40	4	8	10	3/4	3/4	3/4
50	5	6	10	3/4	3/4	1
60	6	4	10	3/4	1	1 1/4
70	7	4	8	3/4	1	1 1/4
80	8	3	8	1	1	1 1/4
90	9	2	8	1	1 1/4	1 1/4
100	10	1	8	1 1/4	1 1/4	1 1/2
125	11	1	6	1 1/4	1 1/4	1 1/2
150	12	1/0	6	1 1/4	1 1/2	1 1/2
175	13	2/0	6	1 1/4	1 1/2	2
200	14	3/0	6	1 1/4	2	2
225	15	4/0	4	1 1/4	2	2 1/2
250	16	250	4	2	2	2 1/2
275	17	300	4	2	2 1/2	2 1/2
300	18	350	4	2	2 1/2	3
350	19	400	3	2	2 1/2	3
400	20	500	3	2 1/2	3	3
450	21	(2) 4/0	(2) 2		(2) 2	(2) 2 1/2
500	22	(2) 250	(2) 2		(2) 2	(2) 2 1/2
600	23	(2) 350	(2) 1		(2) 2 1/2	(2) 3
700	24	(2) 500	(2) 1/0		(2) 4	(2) 4
800	25	(2) 500	(2) 1/0		(2) 4	(2) 4

NOTE:
THE ABOVE SCHEDULE IS BASED ON 600 VOLT CU WIRE, TYPE THWN/XHHW AND EMT/RGS CONDUIT
EX: (2A) = 2#12+1#12G, 3/4" C.

MOORE
CONSULTING ENGINEERS, LLC
457 Oakshade Road, Shamong, NJ 08088
Tel: (609) 268-0500 Fax: (609) 268-5050
JEFFREY A. MOORE
PROFESSIONAL ENGINEER
NJ LIC. NO. 24GE04051000
NJ AUTH. NO. 24GA28120100
MCE PORJCET #21037

PROJECT
STONE HARBOR BEACH PATROL HEAD QUARTERS
95TH STREET & BEACH
STONE HARBOR, NJ

TITLE
ELECTRICAL - DIAGRAMS AND DETAILS

CONTRACTOR SHALL CHECK & VERIFY ALL DIMENSIONS AND FIELD CONDITIONS PRIOR TO STARTING CONSTRUCTION.

06/17/2021

REV:	DESC:	DATE:
1	PLANS FOR CONSTR	08/09/21
	PERMIT ISSUE	06/17/21
	BID ISSUE	06/07/21

DRAWN BY:	RWF
CHECKED BY:	KHP
DATE:	04/20/21
SCALE:	AS NOTED

PROJECT No. 21037

E200

PANEL: HP2, SEC 1

PANEL:	HP2, SEC 1	208 /120 VOLTS,	3 PHASE	4 WIRE	MAIN BUS ___ AMPS
LOCATION:	ELECTRICAL CLOSET 210	MOUNTING:	SURFACE (■)	FLUSH (□)	MAIN BRK 600 AMPS 3 P
BUILDING:	STONE HARBOR BEACH PATROL HEADQUARTERS	BUS	COPPER (■)	ALUMINUM (□)	NEUTRAL 100% AIC 65,000
FED FROM:	SEE SINGLE LINE DIAGRAM	GROUND BUS (■)		THRU-FEED LUGS (■)	LUGS ONLY (□)
FEEDER SIZE:	SEE SINGLE LINE DIAGRAM	ISOL.GND. BUS (□)		INTEGRAL SPD (□)	

CKT NO	TRIP AMPS	DESCRIPTION OF LOAD	MIN WIRE & COND SIZE	LOAD (VA)	PER PHASE (VA) A	B	C	LOAD (VA)	MIN WIRE & COND SIZE	DESCRIPTION OF LOAD	TRIP AMPS	CKT NO
1	30/3	ELEVATOR MACHINE	3C	2100	3600			1500	2A	ELEVATOR CONTROLS	20/1	2
3		.		2100		2280		180	2A	REC - ELEV MACH RM 203	20/1	4
5		.		2100			2280	180	2A	REC - ELEV PIT	20/1	6
7	20/1	WH-1, 2 & 3	2A	525	1701			1176	2A	P-1 - ELEV PIT	20/1	8
9	20/1	REC - EXT DECKS	2A	540		720		180	2A	REC - TOP OF ELEV SHAFT	20/1	10
11	20/1	REC - COUNTERTOP RM 205	2A	1500			3000	1500	2A	REC - COUNTERTOP RM 205	20/1	12
13	20/1	REFRIDGERATOR RM 205	2A	900	1800			900	2A	REC - RMS 204, 206 & 207	20/1	14
15	20/1	REC - RMS 204, 206 & 208	2A	720		1120		400	2A	REC - TV MON RM 204	20/1	16
17	20/1	REC - OFFICES 202 & 209	2A	720			1440	720	2A	REC - OFFICES 202 & 209	20/1	18
19	20/1	REC - PRINTER/COPIER OFFICE 209	2A	1500	3000			1500	2A	REC - PRINTER/COPIER OFFICE 202	20/1	20
21	30/2	(E)LTG - 95TH STREET ACORN	3A	2400		2574		174	2A	CP-1	20/1	22
23		.		2400			6360	3960	5C	HP-1	50/3	24
25	20/1	SITE LTG TIME CLOCK	2A	50	4010			3960		.		26
27	15/2	AH-1,CC-A,CC-B,(2)CC-1 & CC-2	2A	437		4397		3960		.		28
29		.		437			2237	1800	2A	ICE MACHINE FIRST FLOOR	20/1	30 NOTE 2
31	20/1	REC - COUNTERTOP FITNESS AREA	2A	180	360			180	2A	REC - COUNTEROP FITNESS AREA	20/1	32
33	20/1	REC - FITNESS EQUIPMENT	2A	1500		3000		1500	2A	REC - FITNESS EQUIPMENT	20/1	34
35	20/1	REC - FITNESS EQUIPMENT	2A	1500			2580	1080	2A	REC - RMS 101 - 104 & 108	20/1	36
37	20/1	REC - OFFICE 103	2A	1080	2580			1500	2A	REC - PRINTER/COPIER OFFICE 103	20/1	38
39	20/1	REC- WOMENS RM 105	2A	180		360		180	2A	REC - WOMENS RM 106	20/1	40
41	20/1	REC - WOMENS RM 107	2A	108			648	540	2A	REC - MEN RMS 109, 110 & 111	20/1	42
43	30/2	(E)SITE LTG	3A	2400	4800			2400	3A	(E)SITE LTG	30/2	44
45		.		2400		4800		2400		.		46
NOTE 2 47	25/1	DISPOSAL RM 205	3A	1656			1746	90	2A	LTG - ELEVATOR PIT	20/1	48
49	20/1	HVAC CONTROLLER RM 209	2A	200	4518.33			4318	6C	SUB FEED PNL HP2, SECTION 3	60/3	50
51	20/1	SPARE	-	0		4318.333		4318		.		52
53	20/1	SPARE	-	0			4318.33	4318		.		54
				TOTAL BY PHASE	26369.3	23569.33	24609.3					

	CONNECTED	x FACTOR	= DEMAND
TOTAL LTG.	18465	1.25	23081.25
TOTAL CONT.	52076	1.25	65095
TOTAL NON-C	32870	1.00	32870
TOTAL REC.	12828	Per NEC	11414
TOTAL A/C	25740	1.00	25740
TOTAL HTG	0	0.00	0
TOTAL	141979		158200.25

SPARE = 25%

TOTAL DEMAND LOAD = 197750 VA

TOTAL AMPS = 549.55067 AMPS

NOTES:
1. SIEMENS INDUSTRY, INC EQUIPMENT IS BASIS OF DESIGN.
2. EC SHALL PROVIDE GFCI TYPE CIRCUIT BREAKER.

PANEL: HP2, SECTION 2

PANEL:	HP2, SECTION 2	208 /120 VOLTS,	3 PHASE	4 WIRE	MAIN BUS 600 AMPS
LOCATION:	ELECTRICAL CLOSET 210	MOUNTING:	SURFACE (■)	FLUSH (□)	MAIN BRK ___ AMPS P
BUILDING:	STONE HARBOR BEACH PATROL HEADQUARTERS	BUS	COPPER (■)	ALUMINUM (□)	NEUTRAL 100% AIC 65,000
FED FROM:	SEE SINGLE LINE DIAGRAM	GROUND BUS (■)		THRU-FEED LUGS (□)	LUGS ONLY (■)
FEEDER SIZE:	SEE SINGLE LINE DIAGRAM	ISOL.GND. BUS (□)		INTEGRAL SPD (□)	

CKT NO	TRIP AMPS	DESCRIPTION OF LOAD	MIN WIRE & COND SIZE	LOAD (VA)	PER PHASE (VA) A	B	C	LOAD (VA)	MIN WIRE & COND SIZE	DESCRIPTION OF LOAD	TRIP AMPS	CKT NO
55	20/2	OVERHEAD DOOR	2A	1040	2080			1040	2A	OVERHEAD DOOR	20/2	56
57		.		1040		2080		1040		.		58
59	20/2	OVERHEAD DOOR	2A	1040			2080	1040	2A	OVERHEAD DOOR	20/2	60
61		.		1040	2080			1040		.		62
63	20/2	OVERHEAD DOOR	2A	1040		2080		1040	2A	OVERHEAD DOOR	20/2	64
65		.		1040			2080	1040		.		66
67	25/2	DSO-1/DSI-1A & DSI-1B	3C	1976	4992			3016	3A	DSO-2 & DSI-2A, 2B & 2C	30/2	68
69		.		1976		4992		3016		.		70
71	15/2	DSO-3 & DSI-3	2A	1144			1744	600	2A	DF-1 RM 112	20/1	72
73		.		1144	1744			600	2A	DF-1 RM 205	20/1	74
75	20/1	CLG FAN RM 112	2A	1267		2534		1267	2A	CLG FAN RM 112	20/1	76
77	20/1	CLG FAN RM 112	2A	1267			2534	1267	2A	CLG FAN RM 112	20/1	78
79	20/1	CLG FAN RM 204	2A	1267	2534			1267	2A	CLG FAN RM 204	20/1	80
81	20/1	CLG FAN RMS 103, 202 & 209	2A	300		300		0	-	SPARE	20/1	82
83	20/1	SPARE	-	0			0	0	-	SPARE	20/1	84
85	20/1	SPARE	-	0	0			0	-	SPARE	20/1	86
87	20/1	SPARE	-	0		0		0	-	SPARE	20/1	88
89	20/1	SPARE	-	0			0	0	-	SPARE	20/1	90
91	20/1	SPARE	-	0	0			0	-	SPARE	20/1	92
93	20/1	SPARE	-	0		0		0	-	SPARE	20/1	94
95	20/1	SPARE	-	0			0	0	-	SPARE	20/1	96
97	40/2	DUAL EV CHARGING (FUTURE)		3800	3800			0	-	SPARE	20/1	98
99		.		3800		3800		0	-	SPARE	20/1	100
101	40/2	DUAL EV CHARGING (FUTURE)		3800			7600	3800		DUAL EV CHARGING (FUTURE)	40/2	102
103		.		3800	7600			3800		.		104
105	40/2	DUAL EV CHARGING (FUTURE)		3800		7600		3800		DUAL EV CHARGING (FUTURE)	40/2	106
107		.		300			4100	3800		.		108
				TOTAL BY PHASE	24830	23386	20138					

	CONNECTED	x FACTOR	= DEMAND
TOTAL LTG.	0	1.25	0
TOTAL CONT.	39801	1.25	49751.25
TOTAL NON-C	16281	1.00	16281
TOTAL REC.	0	Per NEC	0
TOTAL A/C	12272	1.00	12272
TOTAL HTG	0	0.00	0
TOTAL	68354		78304.25

SPARE = 25%

TOTAL DEMAND LOAD = 97880 VA

TOTAL AMPS = 272.01065 AMPS

NOTES:
1. SIEMENS INDUSTRY, INC IS BASIS OF DESIGN.

PANEL: HP2, SECTION 3

PANEL:	HP2, SECTION 3	208 /120 VOLTS,	3 PHASE	4 WIRE	MAIN BUS ___ AMPS
LOCATION:	RADIO CLOSET 208	MOUNTING:	SURFACE (■)	FLUSH (□)	MAIN BRK 60 AMPS 3 P
BUILDING:	STONE HARBOR BEACH PATROL HEADQUARTERS	BUS	COPPER (■)	ALUMINUM (□)	NEUTRAL 100% AIC 22,000
FED FROM:	SEE SINGLE LINE DIAGRAM	GROUND BUS (■)		THRU-FEED LUGS (□)	LUGS ONLY (□)
FEEDER SIZE:	SEE SINGLE LINE DIAGRAM	ISOL.GND. BUS (□)		INTEGRAL SPD (□)	

CKT NO	TRIP AMPS	DESCRIPTION OF LOAD	MIN WIRE & COND SIZE	LOAD (VA)	PER PHASE (VA) A	B	C	LOAD (VA)	MIN WIRE & COND SIZE	DESCRIPTION OF LOAD	TRIP AMPS	CKT NO
109	20/1	TELECOM BACKBOARD RM 207	2A	360	760			400	2A	FACP RM 207	20/1	110 NOTE 2
111	20/1	REC - RADIO CLOSET 208	2A	1500		3000		1500	2A	REC - RADIO CLOSET	20/1	112
113	20/1	REC - RADIO CLOSET 208	2A	1500			3000	1500	2A	REC - RADIO CLOSET	20/1	114
115	20/1	REC - OFFICES 202 & 209	2A	720	1800			1080	2A	REC - OFFICE 103	20/1	116
117	20/1	LTG - STORAGE BAYS 112	2A	908		1249		341	2A	LTG - STAIRS	20/1	118
119	20/1	LTG & EF'S - RMS 103 THUR 111	2A	974			1093	119	2A	LTG - RADIO & IT 207 & 208	20/1	120
121	20/1	LTG & EF - RMS 202-206,209 & 210	2A	741	1141			400	2A	AREA OF REFUGE PNL	20/1	122
123	20/1	LTG - EXTERIOR BLDG MTD	2A	844		844		0	-	SPARE	20/1	124
125	20/1	SPARE	-	0			0	0	-	SPARE	20/1	126
127	20/1	SPARE	-	0	0			0	-	SPARE	20/1	128
129	20/1	SPARE	-	0		0		0	-	SPARE	20/1	130
131		SPACE		0			0	0		SPACE		132
133		SPACE		0	0			0		SPACE		134
135		SPACE		0		0		0		SPACE		136
137		SPACE		0			0	0		SPACE		138
				TOTAL BY PHASE	3701	5093	4093					

	CONNECTED	x FACTOR	= DEMAND
TOTAL LTG.	3857	1.25	4821.25
TOTAL CONT.	6800	1.25	8500
TOTAL NON-C	0	1.00	0
TOTAL REC.	2160	Per NEC	2160
TOTAL A/C	70	1.00	70
TOTAL HTG	0	0.00	0
TOTAL	12887		15551.25

SPARE = 25%

TOTAL DEMAND LOAD = 19439 VA

TOTAL AMPS = 54.021405 AMPS

NOTES:
1. SIEMENS INDUSTRY, INC EQUIPMENT IS BASIS OF DESIGN.
2. EC SHALL PROVIDE CIRCUIT BREAKER HANDLE LOCK ACCESSORY.

LIGHT FIXTURE SCHEDULE

TYPE	DESCRIPTION	MANUFACTURER/ CATALOG #	LAMP DATA QTY	TYPE	WATTS	FIXT WATTS	FIXT VOLTS	MOUNTING	REMARKS
LT01A	6" LED DOWNLIGHT	LITHONIA #LDN6-30/30-L06AR-LSS-MVOLT-GZ10-TRW	INCL	LED	34.8	34.8	120-277	RECESSED	PROVIDE W/3000K COLOR TEMPERATURE, 3000 LUMENS OUTPUT, AND 0-10V 10% DIMMING.
LT01B	6" LED WALL WASH DOWNLIGHT	LITHONIA #LDN6-30/30-L06AR-LSS-MVOLT-GZ10-TRW EL	INCL	LED	34.8	34.8	120-277	RECESSED	PROVIDE W/3000K COLOR TEMPERATURE, 3000 LUMENS OUTPUT, 0-10V 10% DIMMING, AND 10W EMERGENCY BATTERY BACK.
LT02A	2'X2' LED TROFFER	LITHONIA #BLC-2X2-4000LM-80CRI-35K-ADSM-MIN10-ZT-MVOLT	INCL	LED	36	36	120-277	LAY-IN	PROVIDE W/3500K COLOR TEMPERATURE, 4000 LUMENS OUTPUT, AND 0-10V DIMMING.
LT02B	2'X2' LED TROFFER W/EM BATTERY BACKUP	LITHONIA #BLC-2X2-4000LB-80CRI-35K-ADSM-MIN10-ZT-MVOLT -EL14L	INCL	LED	36	36	120-277	LAY-IN	PROVIDE W/3500K COLOR TEMPERATURE, 4000 LUMENS OUTPUT, 0-10V DIMMING, AND 1400 LUMEN EMERGENCY BATTERY PACK.
LT03A	ADJUSTABLE LED DOWNLIGHT W/REMOTE INVERTER	LITHONIA #6JBK-ADJ-30K-90CRI-MW	INCL	LED	10.8	10.8	120	RECESSED	PROVIDE W/3000K COLOR TEMPERATURE, AND 0-10V DIMMING.
LT03B	ADJUSTABLE LED DOWNLIGHT	LITHONIA #6JBK-ADJ-30K-90CRI-MW	INCL	LED	10.8	10.8	120	RECESSED	PROVIDE W/3000K COLOR TEMPERATURE, AND 0-10V DIMMING.
LT04	2' FLUSH MOUNTED LINEAR DIRECT/INDIRECT LED	MARK #SILWID-LCB-2'-2'-90CRI-30K-200LMF-90CRI-30K-90CRI-30K-400LMF-MIN1-SCT-120-WHTT-ZT-E35INV-NLIGHT	INCL	LED	14.4	14.4	120	SURFACE	PROVIDE W/3000K COLOR TEMPERATURE, 200LUM/FT DOWNLIGHT, INTEGRAL BATTERY BACKUP AND 400LUM/FT UPLIGHT OUTPUTS, 0-10V 1% DIMMING AND NLIGHT ENABLED.
LT05	2' WALL MOUNTED LED CLOSET	LITHONIA #FMMCL-24-840-PIR	INCL	LED	17	17	120	SURFACE	PROVIDE 24" MODEL W/INTEGRATED PIR SENSOR.
LT06	4' VAPOR TIGHT WET LOCATION LED STRIP	LITHONIA #CSVT-L48-4000LM-MVOLT-35K-80CRI-STSL	INCL	LED	34	34	120-277	SURFACE	PROVIDE W/3500K COLOR TEMPERATURE, 3000 LUMENS OUTPUT, AND 0-10V DIMMING.
LT07	2' LED VANITY	LITHONIA #FMVTSL-24IN-MVOLT-30K-90CRI-BN	INCL	LED	18.1	18.1	120-277	SURFACE	PROVIDE W/3000K COLOR TEMPERATURE.
LT08	EXTERIOR SCONCE	#TBD	INCL	LED	30	30	120-277	SURFACE	- -
LT09	EXTERIOR LED WALL PACK	LITHONIA #WPX2-LED-P2-30K-MVOLT-E14WC-DDBXD	INCL	LED	47	47	120-277	SURFACE	PROVIDE W/3000K COLOR TEMPERATURE, 6000 LUMENS OUTPUT, AND 14W EMERGENCY BATTERY BACKUP WITH COLD WEATHER CAPABILITY.
L10	LED EXTERIOR ACCENT	LUMENPULSE #LBM 120 CRC UL	INCL	LED	28	28	120-277	YOKE	PROVIDE W/UL LABEL; AND CORROSION RESISTANT COATING. COORDINATE COLOR TEMP; OPTICS; FINISH; AND MISC APPURTENANCES W/ARCH PRIOR TO PURCHASE.
L11	LED STEP LIGHT	LITHONIA #OLSR	INCL	LED	9	9	120-277	SURFACE	PROVIDE W/4000 K COLOR; 370 LUMENS; UL WET LOCATION LABEL; AND ALUM HOUSING W/ CORROSION-RESISTANT FINISH. COLOR BY ARCHITECT.
LT12	ELEVATOR PIT AND TOP OF SHAFT LED VAPORTIGHT	LITHONIA #OLVTMW	INCL	LED	15	15	120-277	WALL	
RH	DUAL LED REMOTE HEAD	EXITRONIX #NXFR-2-WH	INCL	LED	1	2	6V DC	WALL	PROVIDE W/NEMA 4X RATING, WHITE HOUSING AND DUAL LED TYPE LAMP HEADS.
EM	EMERGENCY LED WALLPACK W/ CORROSIVE RESISTANT AND COLD WEATHER LISTING	EXITRONIX #NXFE-12-15-WH-CL	INCL	LED	3.3	6.6	120-277	WALL	PROVIDE W/NEMA 4X RATING, WHITE HOUSING, NI-CAD BATTERY, AND QUANTITY OF HEADS SHOWN.
X1	LED EXIT SIGN	EXITRONIX #NXFX-WB-R-WH	INCL	LED	1	2	120-277	SEE PLANS	E=END, C=CLG, W=WALL PROVIDE W/RED LED LAMP, WHITE NEMA 4X RATED HOUSING, NI-MH BATTERY AND CHEVRONS INDICATED ON PLANS.

MOORE
CONSULTING ENGINEERS, LLC
457 Oakshade Road, Shamong, NJ 08088
Tel: (609) 268-0500 Fax: (609) 268-5050
JEFFREY A. MOORE
PROFESSIONAL ENGINEER
NJ LIC. NO. 24GE04051000
NJ AUTH. NO. 24GA28120100
MCE PORJCET #21037

PROJECT
STONE HARBOR BEACH PATROL HEAD QUARTERS
95TH STREET & BEACH
STONE HARBOR, NJ

TITLE
ELECTRICAL - SCHEDULES

CONTRACTOR SHALL CHECK & VERIFY ALL DIMENSIONS AND FIELD CONDITIONS PRIOR TO STARTING CONSTRUCTION.

06/17/2021

REV:	DESC:	DATE:
1	PLANS FOR CONSTR	08/09/21
	PERMIT ISSUE	06/17/21
	BID ISSUE	06/07/21

DRAWN BY:	RWF
CHECKED BY:	KHP
DATE:	04/20/21
SCALE:	AS NOTED

PROJECT No. 21037

E300

PLUMBING BASIC SYMBOLS

(NOT ALL SYMBOLS ARE NECESSARILY USED ON THIS PROJECT)

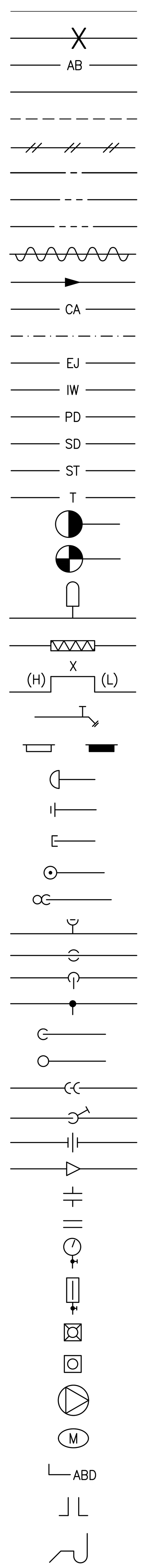

- EXISTING PIPING
- EXISTING PIPING TO BE REMOVED
- PIPING TO BE ABANDONED
- NEW SOIL, WASTE OR SANITARY PIPING
- VENT PIPING (SANITARY)
- PIPING BELOW SLAB
- DOMESTIC COLD WATER PIPING
- DOMESTIC HOT WATER PIPING (120°)
- DOMESTIC HOT WATER CIRCULATION PIPING
- PIPING w/FREEZE PROTECTION CABLE & INSULATION
- ARROW INDICATES DIRECTION OF FLOW
- COMPRESSED AIR PIPING
- GAS PIPING
- EJECTOR DISCHARGE PIPING
- INDIRECT WASTE PIPING
- PUMP DISCHARGE PIPING
- SUMP PUMP DISCHARGE PIPING
- STORM WATER DRAINAGE PIPING
- TEMPERED WATER PIPING
- DISCONNECT FROM EXISTING
- CONNECT TO EXISTING
- SHOCK ARRESTOR (SA)
- FLEXIBLE CONNECTION
- EXPANSION LOOP SIZE
- HOSE BIBB
- WALL HYDRANT (EXIST./NEW)
- FRESH AIR INLET
- CLEAN OUT/PLUGGED OUTLET
- CAPPED OUTLET
- CLEAN–OUT DECK PLATE
- P–TRAP
- VACUUM BREAKER
- BOTTOM PIPE CONNECTION
- TOP PIPE CONNECTION
- SIDE CONNECTION
- PIPE DOWN/DROP
- PIPE RISE/UP
- PIPE SLOPE
- VALVE IN VERTICAL
- UNION
- REDUCER
- WATER PROOF SLEEVE
- SLEEVE
- PRESSURE GAUGE w/GAUGE COCK
- TEMPERATURE GAUGE
- FLOOR DRAIN
- ROOF DRAIN
- PUMP
- WATER METER
- AUTOMATIC BALL DRIP
- VENT THRU ROOF
- TRAP

EXIST. NEW

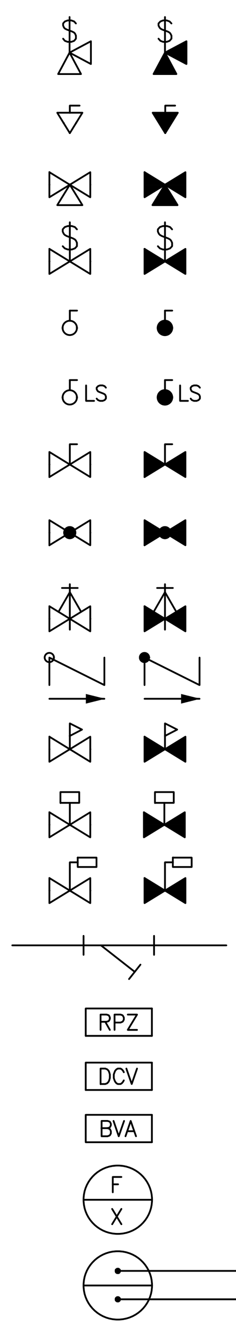

- TEMPERATURE AND PRESSURE RELIEF VALVE
- PLUG VALVE
- MIXING VALVE
- RELIEF VALVE
- BALL VALVE
- BALL VALVE w/LOCK SHIELD
- GATE VALVE
- GLOBE VALVE
- OUTSIDE SCREW & YOKE (OS & Y) VALVE
- CHECK VALVE
- PRESSURE REDUCING VALVE (PRV)
- SOLENOID VALVE
- FLOAT VALVE
- Y STRAINER w/BLOW–OFF VALVE
- REDUCED PRESSURE ZONE BACKFLOW PREVENTER ASSEMBLY
- DOUBLE CHECK VALVE BACKFLOW PREVENTER ASSEMBLY
- BALANCING VALVE ASSEMBLY
- RISER DESIGNATION
- RISER SERVICE
- RISER NUMBER

GENERAL FIRESTOPPING NOTE

CONTRACTOR SHALL BE RESPONSIBLE FOR MAINTAINING OR EXCEEDING WALL/CEILING/FLOOR ASSEMBLY RATINGS FOR ALL PENETRATIONS. CONTRACTOR SHALL VERIFY LOCATION AND RATING OF ALL FIRE ASSEMBLIES AND PROVIDE INTUMESCENT COLLARS AT ALL PENETRATIONS AND FIRE RATED CAULKING AS REQUIRED.

PLUMBING ABBREVIATIONS

(NOT ALL ABBREV. ARE NECESSARILY USED ON THIS PROJECT)

AD	AREA DRAIN
AFF	ABOVE FINISHED FLOOR
AHJ	AUTHORITY HAVING JURISDICTION
BLDG	BUILDING
BOP	BOTTOM OF PIPE
CO	CLEANOUT
CODP	CLEANOUT DECK PLATE
CM	COFFEE MAKER
CV	CHECK VALVE
CVO	CAPPED AND VALVED OUTLET
CW	COLD WATER
CLG	CEILING
CONN	CONNECT
CONT	CONTINUATION
DIA	DIAMETER
DN	DOWN (PENETRATES FLOOR SLAB)
DR	DRAIN
DWG	DRAWING
(E)	EXISTING
(ER)	EXISTING TO BE REMOVED
(ERR)	EXISTING TO BE REMOVED & RELOCATED
EJ DIS	EJECTOR DISCHARGE
EL	ELEVATION
EWC	ELECTRIC WATER COOLER
FAI	FRESH AIR INLET
FD	FLOOR DRAIN
FU	FIXTURE UNIT
FL	FLOOR
FLH	FLOOR HYDRANT
FT	FEET
GC	GENERAL CONTRACTOR
GAL	GALLONS
GPM	GALLONS PER MINUTE
GW	GREASE WASTE
HB	HOSE BIBB
HCLG	HUNG CEILING
HW	HOT WATER
HWR	HOT WATER RETURN
ID	INSIDE DIAMETER
IW	INDIRECT WASTE
IN	INCH
JS	JANITOR'S SINK
LAV	LAVATORY
MAP	MEDICAL GAS ALARM PANEL
MAX	MAXIMUM
MIN	MINIMUM
MR	MOP RECEPTOR
(N)	NEW
NC	NORMALLY CLOSED
NIC	NOT IN THIS CONTRACT
NO	NORMALLY OPEN
NTS	NOT TO SCALE
OD	OUTSIDE DIAMETER
OS&Y	OUTSIDE SCREW & YOKE GATE VALVE
PC	PLUMBING CONTRACTOR
PD	PUMP DISCHARGE
PO	PLUGGED OUTLET
PRV	PRESSURE REDUCING VALVE
PSI	POUNDS PER SQUARE INCH (GAUGE)
RD	ROOF DRAIN
(RE)	RELOCATED EXISTING
(RRO)	EXISTING TO BE REMOVED AND RETURN TO OWNER
SA	SHOCK ARRESTOR
SAN	SANITARY
SD	STORM DRAIN
SH	SHOWER
SK	SINK
SLV	SLEEVE
SQ FT	SQUARE FOOT
ST	STORM
TYP	TYPICAL
UON	UNLESS OTHERWISE NOTED
UP	(PENETRATES FLOOR SLAB)
UR	URINAL
V	VENT
VB	VACUUM BREAKER
VTR	VENT THROUGH ROOF
W	WASTE
WC	WATER CLOSET
WCO	WALL CLEANOUT
WH	WALL HYDRANT
ZCVB	ZONE CONTROL VALVE BOX

PLUMBING GENERAL NOTES

1. CONTRACTOR SHALL PROVIDE AND PAY ALL FEES AND PERMITS. ALL WORK SHALL BE PERFORMED IN ACCORDANCE WITH THE LATEST INTERNATIONAL MECHANICAL CODE, INTERNATIONAL FUEL GAS CODE, NATIONAL STANDARD PLUMBING CODE, NEC CODE AND ALL OTHER STATE AND LOCAL AUTHORITIES HAVING JURISDICTION.

2. CONTRACTOR SHALL VISIT THE JOB SITE AND OBSERVE ALL EXISTING CONDITIONS. PRIOR TO SUBMITTING A BID.

3. DRAWINGS ARE DIAGRAMMATIC AND INTENDED TO SHOW APPROXIMATE LOCATIONS. CONTRACTOR SHALL INSTALL ALL WORK WITHOUT CONFLICT WITH OTHER TRADES AND MAKE ALTERATIONS AS REQUIRED WITHOUT ADDITIONAL COST TO OWNER. CONTRACTOR SHALL INCLUDE ALL NEEDED OFFSETS, CHANGES IN DIRECTION, TRANSITIONS, COLLARS, FITTINGS, ETC. NEEDED FOR COMPLETE AND OPERATIONAL SYSTEMS.

4. ALL COMPONENTS OF THE DOMESTIC WATER SYSTEM SHALL CONFORM TO THE FEDERAL "REDUCTION OF LEAD IN DRINKING WATER ACT" AS DEFINED PER SDWA IN SECTION 1417(D). THE WETTED AREA EXPOSED TO DRINKING WATER SHALL BE LEAD FREE.

5. COORDINATE WORK WITH OTHER TRADES SO THAT ALL COMPONENTS SHALL BE INSTALLED IN THE PROPER PLACE AT THE PROPER TIME.

6. SANITARY PIPING SHALL BE SLOPED ON A DOWNWARD PITCH AT A MINIMUM OF 1/4" PER FOOT FOR 2" SIZES AND LESS. PIPING 3" AND LARGER SHALL BE SLOPED AT 1/8" PER FOOT, AND IN ALL CASES CONFORMING TO JURISDICTIONAL CODE REQUIREMENTS.

7. PROVIDE ACCESSIBLE DRAINAGE SYSTEM CLEANOUTS, EFFECTIVELY PLACED FOR EACH TRAP, STACK, BASE, 90 DEGREE AND 45 DEGREE CHANGE IN LINE DIRECTION AND AT MAXIMUM INTERVALS OF 50 FEET IN HORIZONTAL LINES. PROVIDE ALL ADDITIONAL SYSTEM CLEANOUTS REQUIRED FOR THOROUGH CLEANING.

8. FOR SOLDERED JOINTS, CLEAN THE ENDS OF ALL COPPER TUBING BEFORE ASSEMBLY. APPLY FLUX AND TIN THE ENDS OF TUBING 2 INCHES AND LARGER.

9. BALL TYPE CONTROL VALVES SHALL BE INSTALLED ON EACH BRANCH FROM THE DOMESTIC WATER SUPPLY MAINS AND ON EACH ISOLATED FIXTURE BRANCH.

10. PUBLIC USE HAND WASHING FACILITIES: WATER DISCHARGED FROM PUBLIC–USE HAND WASHING FACILITIES SHALL BE LIMITED TO A MAXIMUM TEMPERATURE OF 110°F USING A WATER TEMPERATURE LIMITING DEVICE COMPLYING WITH ASSE 1070.

11. FLUSH CONTROLS FOR WATER CLOSETS MUST BE LOCATED ON THE "APPROACH" OR OPEN SIDE OF THE TANK, TO COMPLY WITH UFAS SECTION 4.16.5.

12. ALL PIPING ON EXTERIOR WALLS SHALL BE PROTECTED FROM FREEZING. PROVIDE DRAIN BLOW DOWN FOR WINTERIZING.

13. PROVIDE DIELECTRIC FITTINGS WHEN JOINING DISSIMILAR METALS.

14. EXPOSED PIPING AND FITTINGS AT FIXTURES SHALL BE CHROME PLATED I.P.S. BRASS.

15. ESCUTCHEON PLATES SHALL BE PROVIDED ON ALL PIPE WHICH PASS THROUGH WALLS, PARTITIONS, FLOORS OR CEILINGS AND SHALL BE THE SPLIT RING TYPE, STEEL CONSTRUCTION.

16. SLEEVES SHALL BE SCHEDULE 40 STEEL AND SHALL BE TWO PIPE SIZES LARGER THAN THE SYSTEM PIPE. SLEEVES SHALL BE LOCATED WHERE PIPE PASSES THROUGH WALLS, FLOORS OR PARTITIONS. ANNULAR SPACE BETWEEN SLEEVE AND PIPE SHALL BE SEALED WATER TIGHT AND FIRE STOPPED (IF APPLICABLE) TO ACHIEVE AN HOURLY RATING EQUAL OR GREATER TO THAT OF THE ASSEMBLY BEING PENETRATED.

17. ALL MATERIALS AND EQUIPMENT SHALL BE NEW AND BE INSTALLED IN STRICT ACCORDANCE WITH THE MANUFACTURER'S RECOMMENDATIONS AND DETAILS.

18. ALL PIPING SHALL BE INSTALLED IN ACCORDANCE WITH THE BEST PRACTICES OF THE TRADE AND THE LATEST CODE REQUIREMENTS. SYSTEM MATERIALS SHALL BE UNIFORM THROUGHOUT THE BUILDING.

19. ALL PIPING SHALL BE KEPT AS HIGH AS POSSIBLE, CONSISTENT WITH THE PROPER PITCH, TO MAINTAIN MAXIMUM HEADROOM. PIPING SHALL BE ACCURATELY CUT TO MEASUREMENTS ESTABLISHED AT THE BUILDING. PIPING SHALL BE WORKED INTO PLACE WITHOUT SPRINGING, FORCING OR CUTTING OF THE BUILDING STRUCTURE, AND SHALL BE INSTALLED AS DIRECTLY AS POSSIBLE BETWEEN CONNECTING POINTS PARALLEL WITH OR AT RIGHT ANGLES TO BUILDING CONSTRUCTION, EXCEPT AS REQUIRED TO OBTAIN PITCH.

20. ALL EQUIPMENT AND MATERIALS SHALL, AS A MINIMUM, HAVE A WORKING PRESSURE AS DETERMINED BY CODES, ASME (OR SIMILAR OTHER BODY) AND OF NOT LESS THAN 125 PSI.

21. CLEAN ALL PIPE BEFORE ERECTION. REAM ALL PIPE ENDS AFTER CUTTING.

22. FOR SCREWED JOINTS APPLY NON–CORROSIVE, NON–HARDENING TEFLON PIPE TAPE OR SUITABLE COMPOUND TO MALE THREADS ONLY. CAULKING AND PACKING OF THREADS IS PROHIBITED.

23. INSTALL EXPOSED PIPE LINES PARALLEL WITH BUILDING WALLS OR STRUCTURE. DO NOT EMBED PIPING IN CINDER FILL, NOR INSTALL WHERE THERE IS A POSSIBILITY OF FREEZING.

24. PITCH PIPING TO PERMIT AIR VENTING THROUGH THE FIXTURES. ALLOW FOR EXPANSION AND COMPLETE LOW POINT DRAINAGE.

25. IT IS THE RESPONSIBILITY OF THE PLUMBING CONTRACTOR TO REVIEW THESE PLANS AND SPECIFICATIONS, AS WELL AS THE RELATED HVAC, FIRE PROTECTION, ELECTRICAL, STRUCTURAL, ARCHITECTURAL, INTERIOR DECOR AND SITE ENGINEERING DRAWING TO BECOME FAMILIAR WITH THE FULL PROJECT SCOPE. IN ADDITION, THIS CONTRACTOR MUST COORDINATE WITH AN OWNER REPRESENTATIVE TO FULLY UNDERSTAND ALL REQUIREMENTS WHICH MAY NOT BE SPECIFIED HEREIN AND WHICH THE OWNER MAY CONSIDER PART OF THIS CONTRACT. DURING THE COURSE OF CONSTRUCTION COORDINATION AND ACTUAL CONSTRUCTION, IT IS THE RESPONSIBILITY OF THE PLUMBING CONTRACTOR TO WORK CLOSELY WITH ALL ACCOMPANYING CONTRACTORS AND TRADESMEN IN ORDER TO ENSURE A SMOOTH RUNNING AND CAREFULLY COORDINATED INSTALLATION.

26. ALL WORK SHALL BE PERFORMED IN ACCORDANCE WITH ALL APPLICABLE REGULATIONS INCLUDING BUT NOT LIMITED TO NATIONAL, CITY, STATE, LOCAL CODES AND ORDINANCES WHICH MAY BE IN EFFECT. ALL PLUMBING MATERIALS, INSTALLATION PROCEDURES AND SYSTEM LAYOUTS SHALL BE APPROVED BY ALL APPLICABLE CODE ENFORCEMENT AUTHORITIES WITHIN JURISDICTION, AND IT SHALL BE THE PLUMBING CONTRACTOR'S RESPONSIBILITY TO OBTAIN AND PAY FOR ALL NECESSARY PERMITS AND APPROVALS FOR THIS INSTALLATION.

27. THE PLUMBING CONTRACTOR SHALL VISIT THE SITE AND NOTE ALL EXISTING CONDITIONS AS WELL AS ALL CONDITIONS TO BE MET, PRIOR TO BID SUBMISSION. LACK OF A THOROUGH UNDERSTANDING OF THE PROJECT SCOPE AND CONDITIONS SHALL NOT CONSTITUTE AN EXCUSE FOR ERRORS OR OMISSIONS, NOR FOR A REQUEST FOR EXTRA COMPENSATION.

28. IT IS CRITICAL THAT THE PLUMBING CONTRACTOR FIELD VERIFIES ALL INVERTS PRIOR TO BID SUBMISSION. IF ANY CONFLICTS EXIST BETWEEN THE NEW PLUMBING SYSTEMS AND THE EXISTING SITE LEVEL SYSTEMS, THEY SHOULD BE BROUGHT TO THE ATTENTION OF AN OWNER'S REPRESENTATIVE AND THE ENGINEER PRIOR TO BID SUBMISSION. EXTRA COMPENSATION SHALL NOT BE ALLOWED FOR ANY EXTRA WORK WHICH RESULTS FROM AN INABILITY TO MEET THE INVERTS OF THE EXISTING SITE LEVEL PIPING SYSTEMS.

29. THE PLUMBING CONTRACTOR SHALL PROVIDE A COMPLETE SET OF RECORD "AS–BUILT" DRAWINGS INDICATING THE PRECISE LOCATION OF ALL SYSTEMS, EQUIPMENT CONCEALED OR EMBEDDED PIPING, PIPING CONNECTIONS AND ACCESS DOORS. THESE DRAWINGS SHALL ALSO INCLUDE ALL CHANGES AND DEVIATIONS FROM BID DOCUMENTS.

30. RUN ALL DOMESTIC, WASTE, VENT AND GAS PIPING AS HIGH AS POSSIBLE THROUGHOUT ENTIRE BUILDING. INSTALL LONG RUNS OF PIPING WITHIN STEEL (JOIST) SPACE AND OTHER PIPING TIGHT TO BOTTOM OF STEEL. COORDINATE AND VERIFY WITH OTHER CONTRACTORS AS NOT TO INTERFERE WITH DUCTWORK, FIRE PROTECTION PIPING, LIGHTING SYSTEMS, ETC.

31. ALL EXPOSED HORIZONTAL AND VERTICAL PIPING SHALL BE INSTALLED IN A NEAT ARRANGEMENT IN LOCATIONS WHICH ARE THE MOST INCONSPICUOUS. VERTICAL DROP FINAL LOCATIONS SHALL BE COORDINATED AND RUN WITHIN CHASES, WALLS, SOFFITS WITH OTHER MECHANICAL / ELECTRICAL FEEDS. ALL SUCH LOCATIONS ARE TO BE REVIEWED WITH AN OWNER REPRESENTATIVE AND ARCHITECT PRIOR TO INSTALLATION.

32. FINAL CONNECTIONS TO ALL GAS FIRED APPLIANCES TO BE BY THE PLUMBING CONTRACTOR, REGARDLESS OF WHO PROVIDES APPLIANCE. THIS SHALL INCLUDE BUT NOT BE LIMITED TO HVAC EQUIPMENT, COOKING EQUIPMENT, EMERGENCY GENERATORS AND DOMESTIC HOT WATER HEATERS. EACH PIECE OF EQUIPMENT SHALL BE PROVIDED WITH A DIRT LEG, LUBRICATED PLUG VALVE, UNION, GAS SHUT–OFF VALVE AND A FLEXIBLE STAINLESS STEEL CONNECTION.

33. ALL PLUMBING FIXTURES / APPLIANCES SHALL HAVE THEIR OWN INDEPENDENT SHUT–OFF VALVES, INSTALLED IN AN EASILY ACCESSIBLE AND CONVENIENT LOCATION.

34. ALL DOMESTIC WATER BRANCH LINES SHALL HAVE THEIR OWN RESPECTIVE SHUT–OFF VALVES.

35. DOMESTIC WATER HEATER TEMPERATURE / PRESSURE RELIEF VALVES SHALL BE PIPED FULL SIZE TO THE NEAREST APPROVED STANDPIPE OR FLOOR DRAIN. THIS REQUIREMENT SHALL BE APPLICABLE TO ALL DOMESTIC WATER HEATERS.

36. ALL HAND SINKS SHALL HAVE IN–LINE WATER TEMPERING VALVES INSTALLED SO AS TO BE EASILY ACCESSIBLE. THESE TEMPERING VALVES SHALL BE SET TO DELIVER HOT WATER AT 105*F.

37. WHERE APPLICABLE, DO NOT RUN VENTS THROUGH ROOF AT PRE–FINISH METAL ROOFING SYSTEMS, INSTEAD DIVERT VENT PIPING TO RUN UP THROUGH FLAT MEMBRANE ROOF. VENTS THROUGH ROOF SHALL NOT BE VISIBLE TO THE PUBLIC AND NOT LOCATED CLOSER THEN 10'–0" OF ROOFTOP EQUIPMENT.

38. THE PLUMBING CONTRACTOR SHALL RUN OUT ALL BUILDING DRAINAGE AND WASTE LINES AND MAKE ALL CONNECTIONS TO SITE LEVEL SYSTEMS AS INDICATED ON BID DOCUMENTS.

39. THE PLUMBING CONTRACTOR SHALL FIELD VERIFY THE EXACT LOCATIONS AND CONNECTIONS OF THE HOSE BIBB. PLUMBER TO FURNISH AND INSTALL ALL PIPING AND EQUIPMENT AS PER MANUFACTURER'S INSTRUCTIONS. FURNISH AND INSTALL AN ACCESSIBLE SHUT–OFF VALVE FOR THE HOSE BIBB BRANCH SUPPLY. FINAL CONNECTION & INSTALLATION BY PLUMBING CONTRACTOR.

40. PRIOR TO INSTALLING SYSTEMS, THE PLUMBING CONTRACTOR SHALL MEET WITH AN OWNER'S REPRESENTATIVE TO FIELD VERIFY THE EXACT LOCATION OF ALL PROPOSED EQUIPMENT WHICH MAY NOT BE CLEARLY INDICATED ON THE DRAWINGS.

41. THE PLUMBING CONTRACTOR SHALL COORDINATE THE ENTIRE UNDERGROUND PLUMBING PIPING SYSTEM LOCATIONS AND INVERTS WITH THE GRADE BEAMS, INCLUDING TRENCH DRAINS AS WELL AS ALL OTHER UNDERGROUND SYSTEMS.

42. RUN ALL INTERIOR PIPING (GAS, WATER, VENTS AND WASTE) AS TIGHT TO STEEL AS POSSIBLE.

43. PROVIDE TRAP PRIMERS TO ALL DRAINS ONLY WHEN REQUIRED BY CODE. VERIFY PRIOR TO SUBMITTING BID.

44. REFER TO ARCHITECTURAL PLANS FOR LOCATIONS OF FIRE WALLS AND WALLS WHICH REQUIRE SEALING. PLUMBING CONTRACTOR SHALL BE RESPONSIBLE FOR SEALING ALL FLOOR AND WALL PENETRATIONS WITH FIRE RATED SEALANT BEFORE FINAL PAYMENT.

45. PLUMBING CONTRACTOR SHALL PROVIDE AND INSTALL ALL INDIRECT WASTE PIPING – SHALL BE COPPER WITH SOLDER JOINTS.

46. PLUMBING CONTRACTOR SHALL RUN ALL PIPING TO AVOID REINFORCING AT ALL COLUMN LINES.

47. FOR MOUNTING HEIGHTS OF ALL PLUMBING FIXTURES, SEE ARCHITECTURAL DRAWINGS.

48. ALL WORK SHALL BE INSTALLED IN A NEAT AND WORKMAN–LIKE MANNER IN ACCORDANCE WITH LOCAL CODES AND ALL AUTHORITIES HAVING JURISDICTION.

49. VALVES SHALL NOT BE INSTALLED WITH THE OPERATING HANDLE POINTING DOWNWARD. RUN PIPING GENERALLY PARALLEL TO THE AXIS OF THE BUILDING, ARRANGED TO CONFORM TO THE BUILDING REQUIREMENTS AND TO SUIT THE NECESSITIES OF CLEARANCE OF DUCTS, FLUES, CONDUITS AND WORK OF OTHER TRADES AND CLOSE TO CEILING OR OTHER CONSTRUCTION AS PRACTICAL, FREE OF TRAPS OR BENDS.

50. PLUMBING CONTRACTOR SHALL MAKE ALL FINAL CONNECTIONS TO WATER, STORM AND SANITARY LATERALS INSTALLED BY SITE CONTRACTOR.

51. ALL PIPES, DUCT, CONDUIT AND OTHER PENETRATIONS OF RETURN AIR PLENUM, INCLUDING HANGERS AND SUPPORT SYSTEM PENETRATIONS OF TOP HORIZONTAL SHALL BE SEALED AIRTIGHT; DUCT PENETRATIONS SHALL BE NEATLY FRAMED WITH SHEETMETAL.

52. PLUMBING CONTRACTOR SHALL REPLACE ANY PIPING SYSTEM AND COMPONENTS WHICH DO NOT PASS TESTING PROCEDURES SPECIFIED AND RETEST REPAIRED PORTIONS OF THE SYSTEM.

53. PLUMBING CONTRACTOR SHALL MAKE FINAL CONNECTIONS TO ALL PLUMBING EQUIPMENT, EQUIPMENT SUPPLIED BY OTHERS, INCLUDING REQUIRED FAUCETS, STOPS, VALVES, FITTINGS, TRAPS, ETC.

54. PLUMBING CONTRACTOR SHALL INSTALL PIPING SO AS NOT TO ENCROACH ON REQUIRED CLEARANCES ABOVE ANY ELECTRIC PANEL. NO PIPING SHALL BE INSTALLED DIRECTLY OVER ELECTRICAL PANELS AND NO PIPING SHALL BE INSTALLED WITH THE BOTTOM AT LESS THAN 66" ABOVE THE 4'–0" SPACE DIRECTLY IN FRONT OF ANY ELECTRIC PANELS.

55. PLUMBING CONTRACTOR SHALL FURNISH AND INSTALL AIR CHAMBERS PER NATIONAL STANDARD PLUMBING CODE ON ALL WATER SUPPLIES TO PLUMBING FIXTURES WITH QUICK CLOSING VALVES.

56. PLUMBING CONTRACTOR SHALL ARRANGE FOR AND SHALL PAY ALL COSTS INCURRED FOR THE NEW GAS SERVICE AND METER.

57. PIPING HANGERS SHALL BE SPACED SO AS TO PREVENT SAG AND PERMIT PROPER DRAINAGE AND SHALL NOT BE SPACED MORE THAN EIGHT FEET APART UNLESS A GREATER SPACE IS DEFINITELY INDICATED ON THE DRAWINGS. A HANGER SHALL BE PLACED WITHIN (1) FOOT OF EACH HORIZONTAL ELBOW. HANGERS SHALL BE SIZED TO FIT OVER INSULATION AND BE PROVIDED WITH AN INSULATION SHIELDS.

58. THE INSTALLATION OF ALL INSULATION SHALL BE PERFORMED BY AN EXPERIENCED CRAFTSMAN IN A NEAT WORKMAN–LIKE MANNER AND SHALL BE IN ACCORDANCE WITH THE MANUFACTURER'S PUBLISHED RECOMMENDATIONS FOR SERVICE INTENDED.

59. ALL MATERIALS OF INSULATION SHALL BE OF THE TYPE AND QUALITY AS MANUFACTURED BY ARMSTRONG, CERTAINTEED, OWENS–CORNING OR SCHULLER.

60. ALL MATERIAL AND EQUIPMENT SPECIFIED TO BE INSULATED SHALL BE THOROUGHLY TESTED AND APPROVED PRIOR TO APPLYING THE INSULATION.

61. PLUMBING CONTRACTOR SHALL COORDINATE WITH ELECTRICAL CONTRACTOR TO ASSURE DOMESTIC WATER AND ELECTRICAL WIRING ARE NOT INSTALLED IN SAME STUD BAY IN WALLS AND CEILINGS.

62. ALL PIPING IN RETURN AIR PLENUMS SHALL BE CAST IRON OR CPVC. PVC PIPING IS PROHIBITED IN RETURN AIR PLENUMS.

63. DRAINAGE SYSTEM TEST

    A. WATER TEST: THE ENTIRE DRAINAGE AND VENTING SYSTEM SHALL HAVE ALL NECESSARY OPENINGS PLUGGED TO PERMIT THE ENTIRE SYSTEM TO BE FILLED WITH WATER TO THE LEVEL OF THE HIGHEST VENT STACK ABOVE THE ROOF. THE SYSTEM SHALL HOLD THIS WATER FOR 30 MINUTES WITHOUT LEAKAGE. WHERE A "PORTION" OF THE SYSTEM IS TO BE TESTED, THE TEST SHALL BE CONDUCTED IN THE SAME MANNER, EXCEPT THAT A VERTICAL STACK 10 FEET ABOVE THE HIGHEST HORIZONTAL LINE TO BE TESTED SHALL BE INSTALLED AND FILLED WITH WATER TO MAINTAIN SUFFICIENT PRESSURE, OR A PUMP MAY BE USED TO SUPPLY THE PRESSURE. THE PRESSURE SHALL BE MAINTAINED FOR 30 MINUTES.

    B. AIR TEST: IF TEST IS DONE WITH AIR, A PRESSURE OF 5 PSIG SHALL BE APPLIED WITH A FORCE PUMP AND MAINTAINED AT LEAST 15 MINUTES WITHOUT LEAKAGE. A MERCURY–COLUMN GAGE REGISTERING 10" IN HEIGHT SHALL BE USED IN THE AIR TEST. AIR TESTS SHALL NOT BE USED EXCEPT WHERE PERMITTED BY CODES AND WHEN AMBIENT TEMPERATURES ARE LESS THAN 32 DEGREES FAHRENHEIT FOR 30 MINUTES.

64. DOMESTIC WATER PIPING SYSTEM

    UPON COMPLETION OF THE ROUGH–IN AND BEFORE INSULATION OR SETTING OF FIXTURES, DOMESTIC HOT AND COLD WATER PIPING SYSTEMS SHALL BE TESTED AT A HYDROSTATIC PRESSURE OF 1–1/2 TIMES THE ACTUAL WATER PRESSURE BUT NOT LESS THAN 100 PSIG AND PROVEN TIGHT AT THIS PRESSURE FOR NOT LESS THAN 3 HOURS.

65. CLEANING OF PIPING SYSTEMS

    FOLLOWING THE COMPLETION OF SYSTEM TESTS, ALL PIPING SYSTEMS SHALL BE THOROUGHLY CLEANED BY THE CONTRACTOR BY FLUSHING WITH WATER OR AS OTHERWISE SPECIFIED. ALL DIRT, SCALE, OIL, GREASE AND FOREIGN SUBSTANCES WHICH MAY HAVE ACCUMULATED IN THE SYSTEMS DURING INSTALLATION SHALL BE COMPLETELY REMOVED.

66. STERILIZATION OF POTABLE WATER SYSTEMS

    A. BEFORE BEING PLACED IN SERVICE, THE COMPLETE DOMESTIC HOT AND COLD WATER PIPING WITHIN THE BUILDING SHALL BE STERILIZED IN ACCORDANCE WITH THE LATEST ISSUE OF AWWA SPECIFICATION C–651 AND PER NATIONAL STANDARD PLUMBING CODE SECTION 10.9. THE PIPING SHALL BE FILLED WITH A WATER–CHLORINE SOLUTION CONTAINING AT LEAST 50 PARTS PER MILLION OF CHLORINE AND SHALL BE VALVED OFF FOR 24 HOURS OR FILLED WITH A WATER–CHLORINE SOLUTION CONTAINING AT LEAST 200 PARTS PER MILLION OF CHLORINE AND ALLOWED TO STAND FOR AT LEAST 3 HOURS. FOLLOWING THE ALLOWED STANDING TIME, THE SYSTEM SHALL BE FLUSHED WITH POTABLE WATER UNTIL NO CHLORINE REMAINS IN THE SYSTEM.

    B. PRIOR TO STERILIZATION, SYSTEMS SHALL BE LEAK TESTED AND ALL DIRT AND FOREIGN MATTER SHALL BE REMOVED BY A THOROUGH FLUSHING WITH WATER.

67. ENGAGE A FACTORY–AUTHORIZED SERVICE REPRESENTATIVE TO PERFORM STARTUP SERVICES. COMPLETE INSTALLATION AND STARTUP CHECKS SHALL BE ACCORDING TO MANUFACTURER'S WRITTEN INSTRUCTIONS AND STARTUP REPORTS SHALL BE PROVIDED TO ARCHITECT/ENGINEER FOLLOWING COMPLETION. STARTUP SHALL BE PROVIDED FOR ALL EQUIPMENT SUPPLIED OR INSTALLED, INCLUDING BUT NOT LIMITED TO THE FOLLOWING:

    A. WATER HEATERS
    B. PUMPS
    C. COMPRESSORS
    D. CONTROLS

06/07/2021

MOORE
CONSULTING ENGINEERS, LLC
457 Oakshade Road, Shamong, NJ 08088
Tel: (609) 268-0500 Fax: (609) 268-5050
JEFFREY A. MOORE
PROFESSIONAL ENGINEER
NJ LIC. NO. 24GE04051000
NJ AUTH. NO. 24GA28120100
MCE PORJCET #21037

PROJECT
STONE HARBOR BEACH PATROL HEAD QUARTERS
95TH STREET & BEACH
STONE HARBOR, NJ

TITLE
PLUMBING - COVERSHEET

CONTRACTOR SHALL CHECK & VERIFY ALL DIMENSIONS AND FIELD CONDITIONS PRIOR TO STARTING CONSTRUCTION.

REV:	DESC:	DATE:
	BID ISSUE	06/07/21

DRAWN BY:	AT
CHECKED BY:	WAC
DATE:	04/20/21
SCALE:	AS NOTED

PROJECT No. 21037

P000

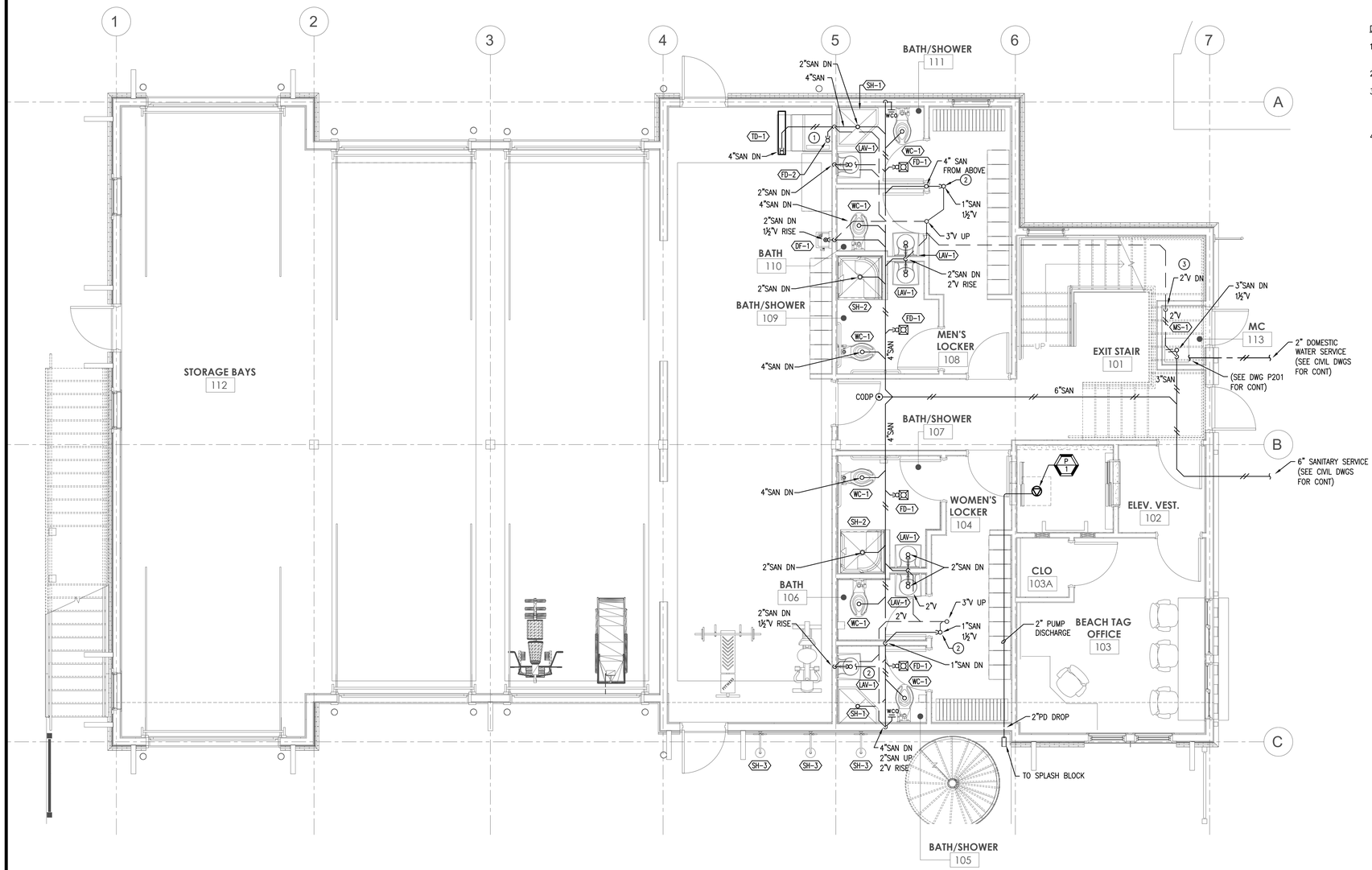

01 SANITARY & VENT – FIRST FLOOR PLAN
SCALE: 1/4" = 1' – 0"

DRAWING NOTES:

1. SEE PLUMBING FIXTURE SCHEDULE FOR INDIVIDUAL PLUMBING FIXTURE CONNECTION SIZES.
2. SEE PLUMBING RISER DIAGRAMS FOR ADDITIONAL SIZES.
3. ALL PIPING IS SHOWN DIAGRAMMATIC. FIELD MODIFY PIPING SO THAT IT IS INSTALLED IN NON-FIRE RATED WALLS IF POSSIBLE. PIPING TO BE INSTALLED IN FIRE-RATED WALLS SHALL MAINTAIN WALL RATINGS.
4. PROVIDE TRAP SEALS FOR ALL FLOOR DRAINS.

KEY NOTES:

1. COORDINATE FLOOR DRAIN WITH LOCATION OF ICE MAKER DRAIN CONNECTION.
2. PROVIDE 1"SAN P-TRAP STANDPIPE WITH FUNNEL AND 1½"V FOR CONDENSATE DRAIN TERMINATION FOR AC EQUIPMENT.
3. COORDINATE ROUTE OF PIPING IN EXIT STAIRS, ARCHITECT TO PROVIDE FIRE RATE ENCLOSURE FOR PIPING.

06/07/2021

MOORE
CONSULTING ENGINEERS, LLC
457 Oakshade Road, Shamong, NJ 08088
Tel: (609) 268-0500 Fax: (609) 268-5050
JEFFREY A. MOORE
PROFESSIONAL ENGINEER
NJ LIC. NO. 24GE04051000
NJ AUTH. NO. 24GA28120100
MCE PORJCET #21037

PROJECT
STONE HARBOR BEACH PATROL HEAD QUARTERS
95TH STREET & BEACH
STONE HARBOR, NJ

TITLE
SANITARY & VENT - FIRST FLOOR PLAN

CONTRACTOR SHALL CHECK & VERIFY ALL DIMENSIONS AND FIELD CONDITIONS PRIOR TO STARTING CONSTRUCTION.

REV:	DESC:	DATE:
	BID ISSUE	06/07/21

DRAWN BY:	AT
CHECKED BY:	WAC
DATE:	04/20/21
SCALE:	AS NOTED

PROJECT No. 21037

P101

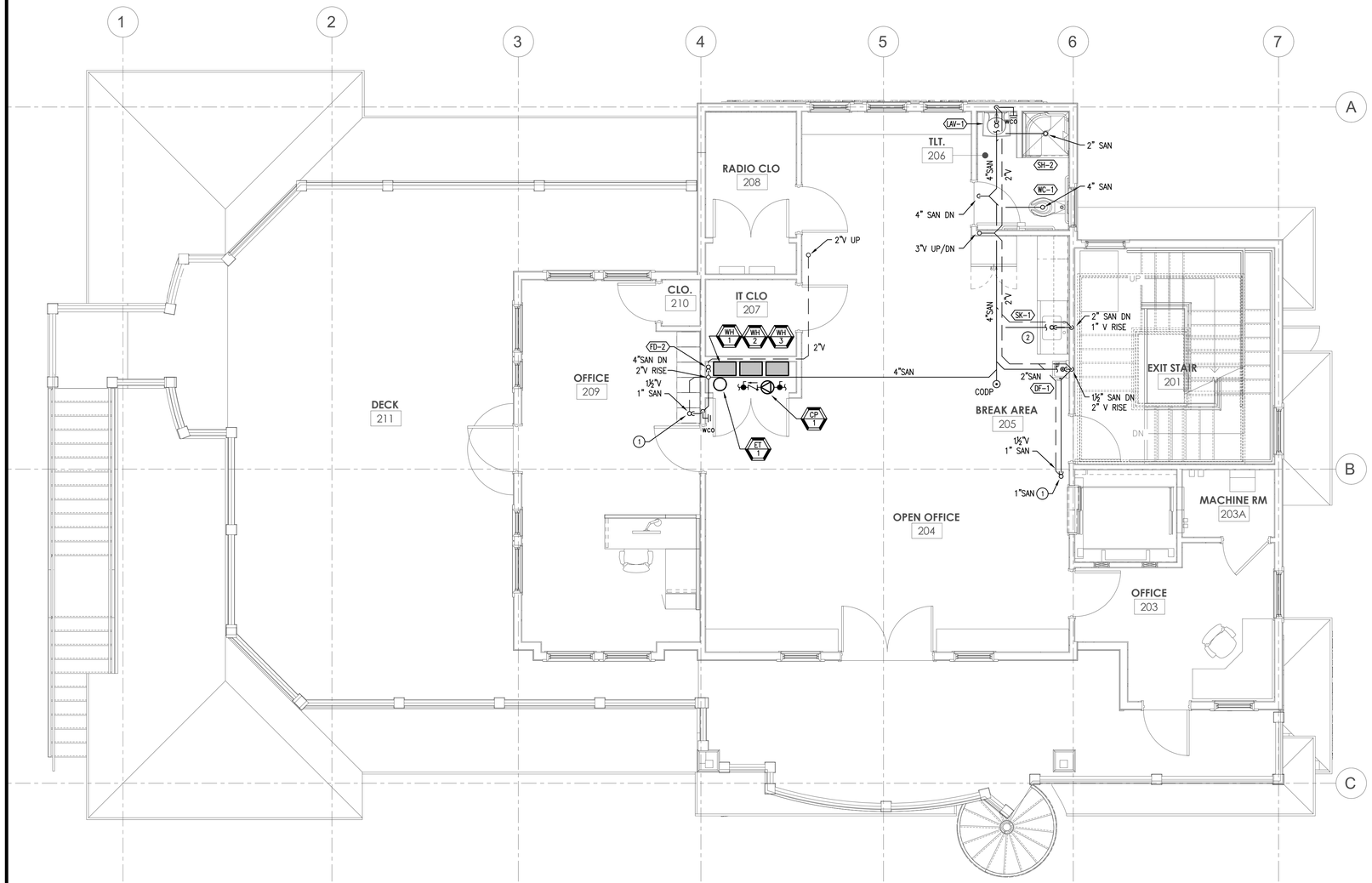

01 SANITARY & VENT – SECOND FLOOR PLAN
SCALE: 1/4" = 1' – 0"

DRAWING NOTES:

1. SEE PLUMBING FIXTURE SCHEDULE FOR INDIVIDUAL PLUMBING FIXTURE CONNECTION SIZES.
2. SEE PLUMBING RISER DIAGRAMS FOR ADDITIONAL SIZES.
3. ALL PIPING IS SHOWN DIAGRAMMATIC. FIELD MODIFY PIPING SO THAT IT IS INSTALLED IN NON-FIRE RATED WALLS IF POSSIBLE. PIPING TO BE INSTALLED IN FIRE-RATED WALLS SHALL MAINTAIN WALL RATINGS.
4. PROVIDE TRAP SEALS FOR ALL FLOOR DRAINS.

KEY NOTES:

1. PROVIDE 1"SAN P-TRAP STANDPIPE WITH FUNNEL AND 1½"V FOR CONDENSATE DRAIN TERMINATION FOR AC EQUIPMENT.
2. INSTALL GARBAGE DISPOSAL UNDER SINK.

06/07/2021

MOORE
CONSULTING ENGINEERS, LLC
457 Oakshade Road, Shamong, NJ 08088
Tel: (609) 268-0500 Fax: (609) 268-5050
JEFFREY A. MOORE
PROFESSIONAL ENGINEER
NJ LIC. NO. 24GE04051000
NJ AUTH. NO. 24GA28120100
MCE PORJCET #21037

PROJECT
STONE HARBOR BEACH PATROL HEAD QUARTERS
95TH STREET & BEACH
STONE HARBOR, NJ

TITLE
SANITARY & VENT- SECOND FLOOR PLAN

CONTRACTOR SHALL CHECK & VERIFY ALL DIMENSIONS AND FIELD CONDITIONS PRIOR TO STARTING CONSTRUCTION.

REV:	DESC:	DATE:
	BID ISSUE	06/07/21

DRAWN BY:	AT
CHECKED BY:	WAC
DATE:	04/20/21
SCALE:	AS NOTED

PROJECT No. 21037

P102

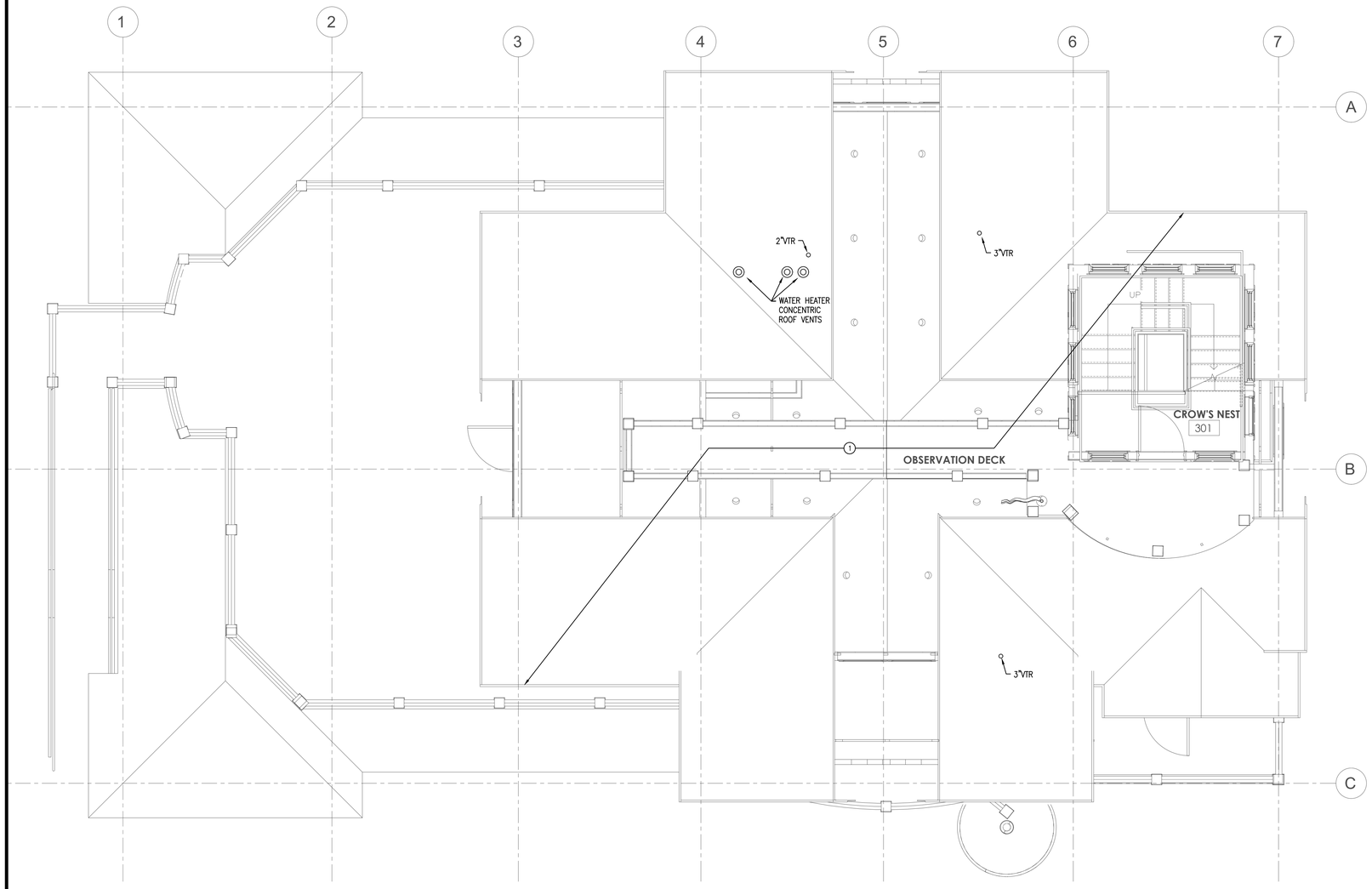

01 SANITARY & VENT – CROW'S NEST PLAN
SCALE: 1/4" = 1' – 0"

DRAWING NOTES:

1. COORDINATE WATER HEATER AND VENTS TO BE 10FT FROM OBSERVATION DECK.

KEY NOTES:

1. REFER TO ARCHITECTURAL PLANS FOR ALL ROOF DRAINAGE AND GUTTERS. RAINWATER DRAINAGE FROM SECOND FLOOR ROOF DECK BY SCUPPERS; NO INTERIOR ROOF DRAINAGE.

06/07/2021

MOORE
CONSULTING ENGINEERS, LLC
457 Oakshade Road, Shamong, NJ 08088
Tel: (609) 268-0500 Fax: (609) 268-5050
JEFFREY A. MOORE
PROFESSIONAL ENGINEER
NJ LIC. NO. 24GE04051000
NJ AUTH. NO. 24GA28120100
MCE PORJCET #21037

PROJECT
STONE HARBOR BEACH PATROL HEAD QUARTERS
95TH STREET & BEACH
STONE HARBOR, NJ

TITLE
SANITARY & VENT - CROW'S NEST PLAN

CONTRACTOR SHALL CHECK & VERIFY ALL DIMENSIONS AND FIELD CONDITIONS PRIOR TO STARTING CONSTRUCTION.

REV:	DESC:	DATE:
	BID ISSUE	06/07/21

DRAWN BY:	AT
CHECKED BY:	WAC
DATE:	04/20/21
SCALE:	AS NOTED

PROJECT No. 21037

P103

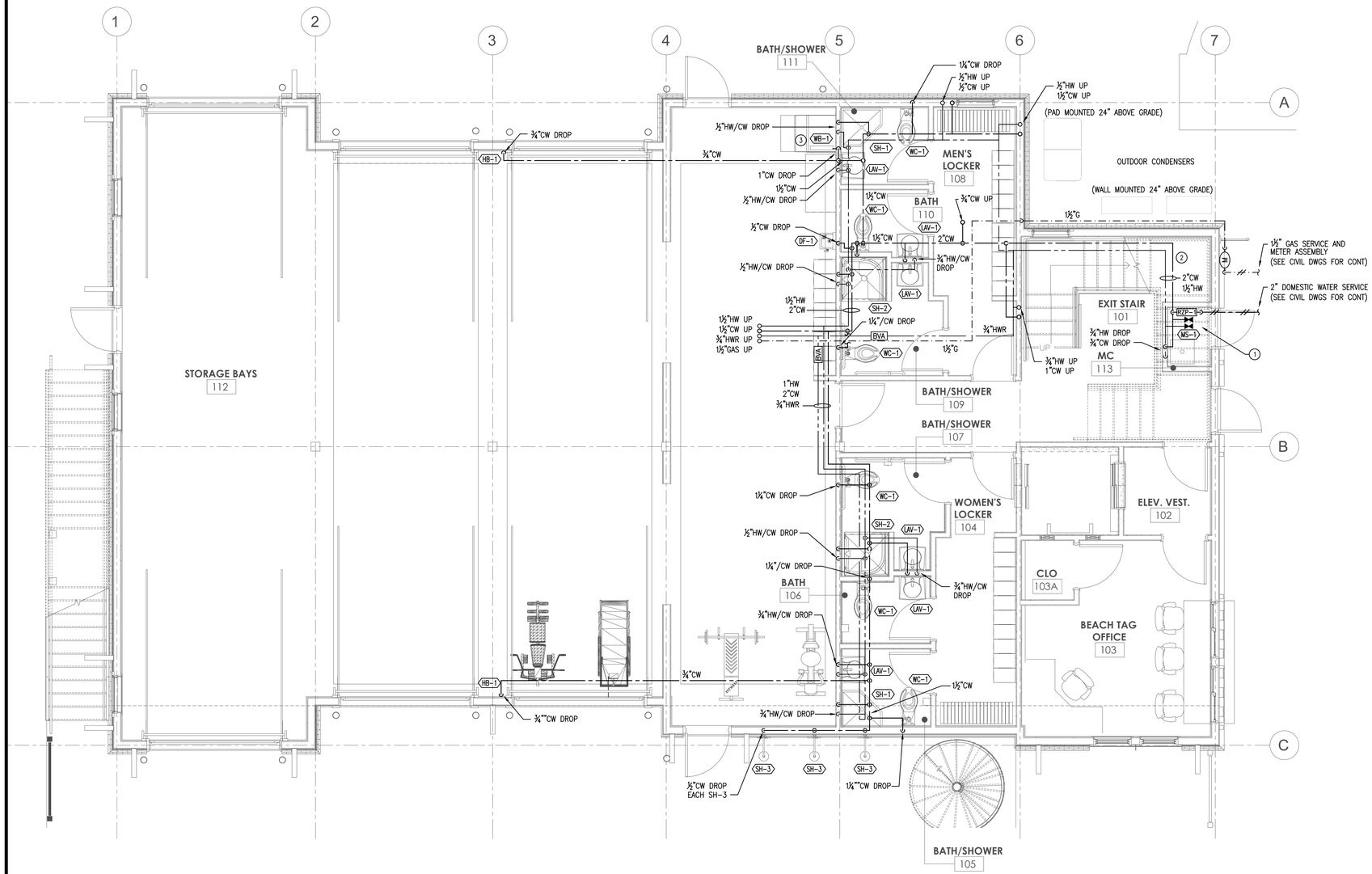

01 PLUMBING SERVICES – FIRST FLOOR PLAN
SCALE: 1/4" = 1' – 0"

DRAWING NOTES:

1. SEE PLUMBING FIXTURE SCHEDULE FOR INDIVIDUAL PLUMBING FIXTURE CONNECTION SIZES.
2. SEE PLUMBING RISER DIAGRAMS FOR ADDITIONAL SIZES.
3. ALL PIPING IS SHOWN DIAGRAMMATIC. FIELD MODIFY PIPING SO THAT IT IS INSTALLED IN NON-FIRE RATED WALLS IF POSSIBLE. PIPING TO BE INSTALLED IN FIRE-RATED WALLS SHALL MAINTAIN WALL RATINGS.
4. PROVIDE TRAP PRIMERS FOR ALL FLOOR DRAINS.

KEY NOTES:

1. PROVIDE (2)¾"MALE OUTLET CONNECTION FOR AIR COMPRESSOR W/ACCESS PANEL, COORDINATE LOCATION W/ARCH/OWNER FOR DRAIN BLOWOUT.
2. COORDINATE PIPING ROUTING UNDER EXIT STAIR. COORDINATE WITH ARCHITECT TO PROVIDE RATED ENCLOSURE FOR PIPING.
3. PROVIDE WATER FILTER (WF-1) FOR OWNER PROVIDED ICE MAKER. WATER FILTER MANUFACTURER SHALL MATCH ICE MAKER, SIZE PER ICE MAKERS REQUIREMENTS. COORDINATE (WF-1) LOCATION WITH OWNER AND ARCHITECT PRIOR TO INSTALLATION.
4. 1½" GAS SERVICE AND METER ASSEMBLY (SEE CIVIL DWGS FOR CONT)
5. 2" DOMESTIC WATER SERVICE (SEE CIVIL DWGS FOR CONT)

06/07/2021

MOORE
CONSULTING ENGINEERS, LLC
457 Oakshade Road, Shamong, NJ 08088
Tel: (609) 268-0500 Fax: (609) 268-5050
JEFFREY A. MOORE
PROFESSIONAL ENGINEER
NJ LIC. NO. 24GE04051000
NJ AUTH. NO. 24GA28120100
MCE PORJCET #21037

PROJECT
STONE HARBOR BEACH PATROL HEAD QUARTERS
95TH STREET & BEACH
STONE HARBOR, NJ

TITLE
PLUMBING SERVICES - FIRST FLOOR PLAN

CONTRACTOR SHALL CHECK & VERIFY ALL DIMENSIONS AND FIELD CONDITIONS PRIOR TO STARTING CONSTRUCTION.

REV:	DESC:	DATE:
	BID ISSUE	06/07/21

DRAWN BY:	AT
CHECKED BY:	WAC
DATE:	04/20/21
SCALE:	AS NOTED

PROJECT No. 21037

P201

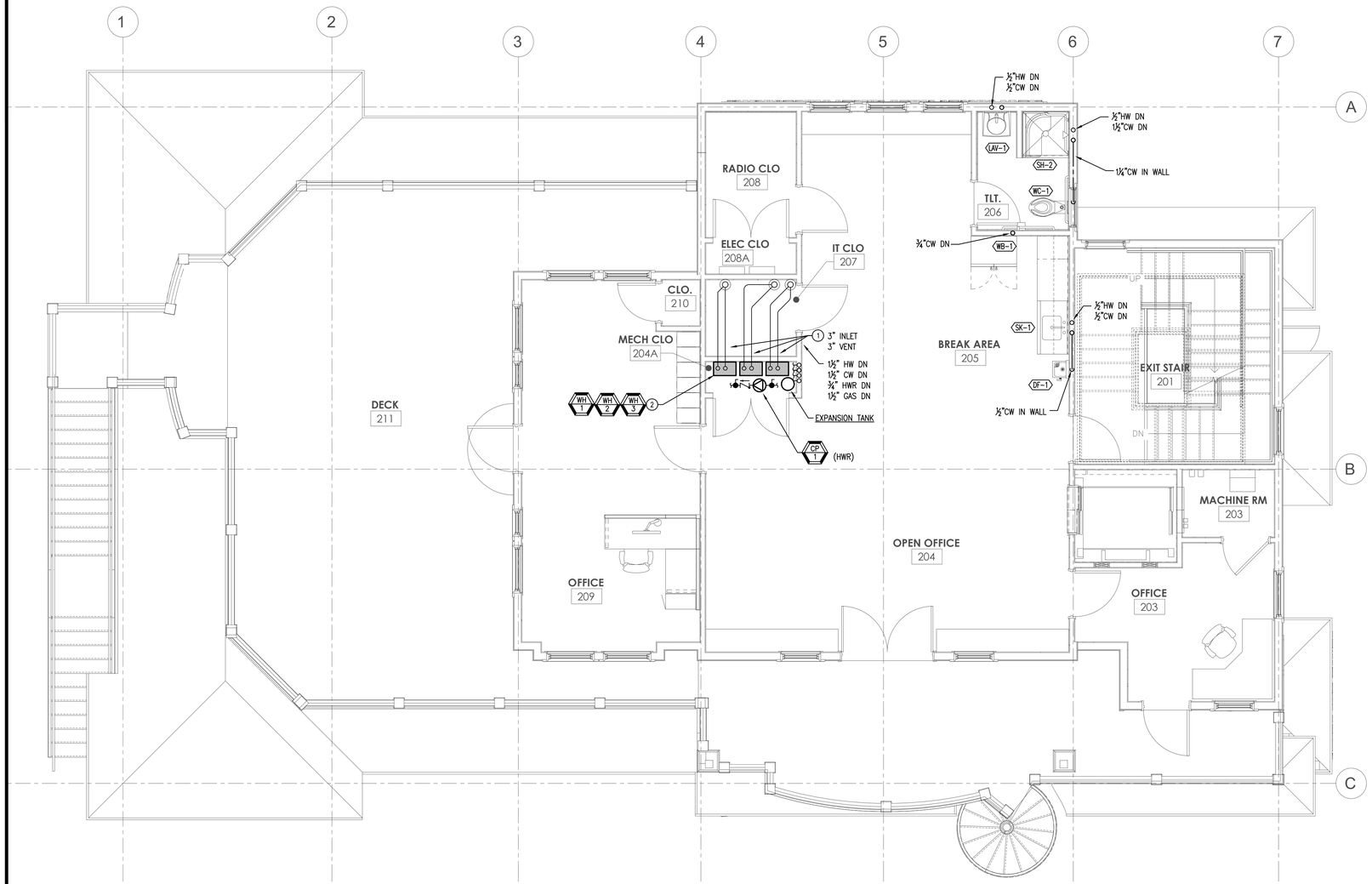

01 PLUMBING SERVICES – SECOND FLOOR PLAN
SCALE: 1/4" = 1' – 0"

DRAWING NOTES:

1. SEE PLUMBING FIXTURE SCHEDULE FOR INDIVIDUAL PLUMBING FIXTURE CONNECTION SIZES.
2. SEE PLUMBING RISER DIAGRAMS FOR ADDITIONAL SIZES.
3. ALL PIPING IS SHOWN DIAGRAMMATIC. FIELD MODIFY PIPING SO THAT IT IS INSTALLED IN NON-FIRE RATED WALLS IF POSSIBLE. PIPING TO BE INSTALLED IN FIRE-RATED WALLS SHALL MAINTAIN WALL RATINGS.

KEY NOTES:

1. EXTEND 3"ø COMBUSTION AIR INLET AND 3"ø VENT UP THRU ROOF. TERMINATE ON ROOF WITH CONCENTRIC ROOF VENT. REFER TO CONCENTRIC ROOF VENT DETAIL AND INSTALL PER MANUFACTURER'S INSTALLATION GUIDELINES.
2. MANIFOLD EACH SYSTEM FOR HW/CW/DRAIN BELOW EACH WATER HEATER.

06/07/2021

MOORE
CONSULTING ENGINEERS, LLC
457 Oakshade Road, Shamong, NJ 08088
Tel: (609) 268-0500 Fax: (609) 268-5050
JEFFREY A. MOORE
PROFESSIONAL ENGINEER
NJ LIC. NO. 24GE04051000
NJ AUTH. NO. 24GA28120100
MCE PORJCET #21037

PROJECT
STONE HARBOR BEACH PATROL HEAD QUARTERS
95TH STREET & BEACH
STONE HARBOR, NJ

TITLE
PLUMBING SERVICES - SECOND FLOOR PLAN

CONTRACTOR SHALL CHECK & VERIFY ALL DIMENSIONS AND FIELD CONDITIONS PRIOR TO STARTING CONSTRUCTION.

REV:	DESC:	DATE:
	BID ISSUE	06/07/21

DRAWN BY:	AT
CHECKED BY:	WAC
DATE:	04/20/21
SCALE:	AS NOTED

PROJECT No. 21037

P202

PLUMBING FIXTURE SCHEDULE

FIXTURE #	FIXTURE	MANUFACTURER AND EQUIPMENT	MODEL NUMBER	SERVICE CONNECTIONS				REMARKS
				CW	HW	SAN	VENT	
WC-1	WATER CLOSET–HANDICAPPED FLUSH VALVE FLOOR MOUNTED	AMERICAN STANDARD MADERA ADA ELONGATED EVERCLEAN SELECTRONIC FLUSH VALVE AMERICAN STANDARD HD OPEN FRONT SEAT LESS COVER	3461.576 6065.761 5901.100	1"	–	4"	2"	
LAV-1	LAVATORY WALL HUNG	AMERICAN STANDARD MURRO AMERICAN STANDARD SELECTRONIC INTEGRATED FAUCET VITREOUS CHINA SHROUD/KNEE CONTACT GUARD	0954.004EC 702.303, PK00.WRK 0062.000	1/2"	1/2"	1–1/2"	1–1/2"	FAUCET IS BATTERY OPERATED AND MIXING VALVE IS INCLUDED PROVIDE GRID DRAIN, TRAP, SUPPLIES, VALVE STOPS & RISERS PROVIDE ADA INSULATION KIT.
MS-1	MOP SINK	FIAT 24"x24"x10" MOLDED STONE FIAT BUMPERGUARD, HOSE & HOSE BRACKET CHICAGO FAUCET	MSB 2424 E–77–AA, 832–AA 540–LD897SGXKCCP	3/4"	3/4"	3"	1–1/2"	PROVIDE STAINLESS STEEL BUMPER GUARD, HOSE AND HOSE BRACKET, MOP HANGER AND WALL GUARD
DF-1	DRINKING FOUNTAIN	ELKAY ADA FILTERED WITH BOTTLE FILLING STATION	LZS8WSLK	1/2"	–	1–1/2"	1–1/2"	PROVIDE TRAP, SUPPLIES, VALVE STOPS & RISERS
SH-1	SHOWER	AMERICAN STANDARD SHOWER AMERICAN STANDARD SHOWER SYSTEM KIT	4242N–ST3 NEO ANGLE CORNER SHOWER BASE/DRAIN TU662SG.211	1/2"	1/2"	2"	1–1/2"	COORDINATE LEFT HAND/RIGHT HAND UNIT WITH ARCHITECTURAL DRAWINGS COORDINATE AVAILABLE OPTIONS WITH ARCHITECT/OWNER PRIOR TO INSTALLATION
SH-2	SHOWER HANDICAPPED ADA	AQUA BATH COMPANY TRANSFER SHOWER SPEAKMAN VERSATILE PRESSURE BALANCE SHOWER PKG	13636BFRFMA SM–3060	1/2"	1/2"	2"	1–1/2"	COORDINATE LEFT HAND/RIGHT HAND UNIT WITH ARCHITECTURAL DRAWINGS COORDINATE AVAILABLE OPTIONS WITH ARCHITECT/OWNER PRIOR TO INSTALLATION
SH-3	SHOWER EXTERIOR	SPEAKMAN SHOWER PKG SPEAKMAN RAIN SHOWER HEAD OUTDOOR SHOWER COMPANY FOOT SHOWER	S–1498–LH S–2762 WMF–442–ADA	1/2"	1/2"	2"	1–1/2"	COORDINATE LEFT HAND/RIGHT HAND UNIT WITH ARCHITECTURAL DRAWINGS COORDINATE AVAILABLE OPTIONS WITH ARCHITECT/OWNER PRIOR TO INSTALLATION
SK-1	SINK	AMERICAN STANDARD PORTSMOUTH 30x18 SINGLE BOWL AMERICAN STANDARD MONTERREY DECK MOUNT FAUCET INSINKERATOR REVOLUTION COMPACT GARBAGE DISPOSAL 3/4HP	18SB6231800S.075 – ADA 6404.141 79031A–ISE	1/2"	1/2"	1–1/2"	1–1/2"	PROVIDE TRAP, SUPPLIES, VALVE STOPS & RISERS PROVIDE FAUCET WITH SPRAY DISPOSAL QUIET SERIES, POWER CORD, 8.1 AMPS 120V/60HZ/1PH, WALL SWITCH BY EC.
WB-1	WALL OUTLET BOX	OATEY ICE MAKER OUTLET BOX	38333	1/2"	–	–	–	ICE MAKER OUTLET BOX WITH QUARTER TURN VALVE AND HAMMER ARRESTOR

NOTES:

1. ALL EXPOSED WATER AND/OR SANITARY PIPING UNDER SINKS OR LAVATORIES SHALL BE INSULATED WITH "LAV GUARD" INSULATION KIT.
2. PVC CELLULAR CORE (FOAM CORE) PIPE SYSTEMS IS NOT AN APPROVED MATERIAL AND SHALL NOT BE ACCEPTED FOR INSTALLATION UNDER ANY CIRCUMSTANCE.
3. ALL FIXTURE SHUT–OFFS AND STOP VALVES SHALL HAVE BRASS STEMS, PROVIDE ANGLE SUPPLY STOP WITH FLANGE (ESCUTCHEON PLATE) AND FLEXIBLE HOSE.
4. PROVIDE THERMOSTATIC MIXING VALVES (MV–1) BELOW EACH SINK AND/OR LAVATORY. (NOT REQUIRED WITH FAUCET WITH BUILT–IN MIXING VALVES.)
5. SEE ARCHITECTURAL DRAWING SETS FOR ADDITIONAL FIXTURE AND ACCESSORY REQUIREMENTS. CONTRACTOR SHALL COORDINATE AND PROVIDE FOR ALL FIXTURE AND EQUIPMENT.
6. SEE ARCHITECTURAL DRAWINGS FOR EXACT LOCATION AND MOUNTING HEIGHTS OF ALL PLUMBING FIXTURES.
7. ALL QUICK OPENING VALVES INCLUDING FLUSH VALVES SHALL HAVE SHOCK ARRESTORS WITH ACCESS PANELS.
8. ALL ADA SHOWERS SHALL BE PROVIDED SO THAT THE TOP OF THRESHOLD DOES NOT EXCEED 1/2".

WATER HEATER SCHEDULE

TAG NO.	ITEM	MANUFACTURER	MODEL	STORAGE (GALLONS)	GAS (MBH)	ELECTRICAL				THERMAL EFFICIENCY	RECOVERY (GPH)	TEMP RISE (DEG. F)	REMARKS
						V	PH	HZ	KW				
WH 1	WATER HEATER	AO SMITH	CT–199I–N	TANKLESS	199	120	1	60	–	97%	–	70°	ALL
WH 2	WATER HEATER	AO SMITH	CT–199I–N	TANKLESS	199	120	1	60	–	97%	–	70°	ALL
WH 3	WATER HEATER	AO SMITH	CT–199I–N	TANKLESS	199	120	1	60	–	97%	–	70°	ALL

NOTES:

1. WATER HEATER TEMPERATURE TO BE SET AT 120°F.
2. PROVIDE TEMPERATURE MIXING VALVE (TMV–1).
3. PROVIDE CONCENTRIC VENT ROOF TERMINAL KIT.
4. PROVIDE CONDENSATE NEUTRALIZER KIT.

PUMP SCHEDULE

SYMBOL	SERVICE	MANUFACTURER	MODEL	GPM/PSI	HEAD FT	MOTOR DATA					REMARKS
						V	PH	HZ	HP	RPM	
CP 1	DHW RECIRCULATION	TACO	0014–F1	2 GPM	11	120	1	60	1/8	3250	PROVIDE TACO 00 7 DAY DIGITAL TIMER, 115/60/1. PROVIDE ALL WIRING, STARTERS, RELAYS AND TRANSFORMERS AS REQUIRED TO OPERATE PUMP AND TIMER FOR A COMPLETE WORKING SYSTEM.
P 1	ELEVATOR SUMP PUMP	LIBERTY PUMPS	ELV290	50 GPM	25	115	1	60	3/4	3450	PROVIDE DUPLEX SYSTEM WITH OILTECTOR CONTROL, LEVEL SENSORS, REMOTE ALARM PANEL (COORDINATE LOCATION WITH ARCHITECT OWNER), JUNCTION BOX AND CHECK VALVE. COORDINATE WITH OWNER INFORMATION SYSTEM OR ALARM COMPANY TO RECEIVED ALARM SIGNAL FROM PANEL AND TO NOTIFY BY EMAIL OR PHONE TO OWNER.

NOTES:

1. ELEVATOR SUMP PUMP SIZED TO CONFORM WITH ASMEA17.1A SECTION 2.2 2.2.2.5. THE SUMP PUMP/DRAIN SHALL HAVE THE CAPACITY TO REMOVE A MINIMUM OF 50 GPM (3,000 GAL/H) PER ELEVATOR

DRAIN SCHEDULE

DESIGNATION	BODY: MANUFACTURER					BODY										STRAINER																				REMARKS
	ZURN	WADE	JR SMITH	JOSAM	WATTS	CAST IRON	STAINLESS STEEL	ALL BRONZE	SECONDARY CLAMP	DECK CLAMP	BACK WATER VALVE	SUMP RECEIVER	FLASHING COLLAR	CAST IRON	GALVANIZED	ALL BRONZE	NICKEL BRONZE	CHROME PLATED	SEDIMENT BUCKET	SECONDARY STRAINER	POLISHED FINISH	SATIN FINISH	TRACTOR GRATE	BRONZE MESH SCREEN	FUNNEL TOP	FLAT TOP	DOME	RAISED LIP	NICKEL BRONZE RIM	LESS GRATE	HALF GRATE	BRONZE TOP	IRON GRATE	POLYETHYLENE	SOLID HINGED COVER	TRAP PRIMER	LOCATION
FD-1	2005–F37					X											X									X										SHOWER/TOILET ROOMS
FD-2	2005–F37					X								X											X											SEE PLANS
TD-1	290SS–VB–SQS						X																													ICE MACHINE

NOTES:

1. ALL FLOOR DRAINS IN FINISHED AREAS SHALL BE LOCATED AS PER THE ARCHITECTURAL DRAWINGS.
2. ALL FLOOR DRAINS IN MECHANICAL EQUIPMENT, BOILER ROOMS, FAN ROOMS ETC., SHALL BE LOCATED IN COORDINATION WITH THE MECHANICAL CONTRACTOR.
3. THE CONTRACTOR SHALL VERIFY THE COMPATIBILITY OF THE DRAINS WITH THE APPROVED ROOFING AND/OR WATER PROOFING SYSTEMS PRIOR TO SUBMITTING SHOP DRAWINGS.
4. THE TOP OF CURVE OF ALL FLOOR DRAINS SHALL BE FLUSH WITH THE ADJACENT FINISHED FLOOR.
5. PROVIDE AUXILIARY INLETS ON ALL TRAPS FOR FLOOR DRAINS IN TOILET ROOMS FOR TRAP PRIMER 'TP–1'.

PIPE SCHEDULE

TAG	TYPE	MATERIAL/FITTINGS	SIZES	INSULATION	NOTES
CW	DOMESTIC COLD WATER	TYPE L COPPER	1" – 3–1/2"	1" THICK FIBERGLASS MOLDED	PROVIDE GLUED PVC COVER ON INSULATION FOR ALL COPPER BELOW CEILING
CW	DOMESTIC COLD WATER	TYPE L COPPER	4" – 6"	1/2" THICK FIBERGLASS MOLDED	PROVIDE GLUED PVC COVER ON INSULATION FOR ALL COPPER BELOW CEILING
HW	DOMESTIC HOT WATER	TYPE L COPPER	1/2" – 1"	1" THICK OR FIBERGLASS ELECTROMETRIC FOAM	PROVIDE GLUED PVC COVER ON INSULATION FOR ALL COPPER BELOW CEILING
HW	DOMESTIC HOT WATER	TYPE L COPPER	1–1/2" – 4"	1–1/2" THICK OR FIBERGLASS ELECTROMETRIC FOAM	PROVIDE GLUED PVC COVER ON INSULATION FOR ALL COPPER BELOW CEILING
HWR	DOMESTIC HOT WATER RETURN	TYPE L COPPER	1/2" – 1"	1" THICK OR FIBERGLASS ELECTROMETRIC FOAM	PROVIDE GLUED PVC COVER ON INSULATION FOR ALL COPPER BELOW CEILING
HWR	DOMESTIC HOT WATER RETURN	TYPE L COPPER	1–1/2" – 4"	1–1/2" THICK OR FIBERGLASS ELECTROMETRIC FOAM	PROVIDE GLUED PVC COVER ON INSULATION FOR ALL COPPER BELOW CEILING
GAS	LOW PRESSURE GAS	SCHEDULE 40 METALLIC PIPE	ALL		
GAS	ELEVATED PRESSURE GAS	SCHEDULE 40 METALLIC PIPE	ALL		
SAN	SANITARY BELOW GRADE	SCHEDULE 40 PVC	ALL		
SAN	SANITARY ABOVE GRADE	SCHEDULE 40 PVC	ALL		
VENT	VENT ABOVE GRADE	SCHEDULE 40 PVC	ALL		

PLUMBING SPECIFIC BIDDING INSTRUCTIONS:

1. MATERIALS SHOWN ON CONTRACT DOCUMENTS ARE TO BE USED FOR BIDDING AS WELL AS CONSTRUCTION. ANY SUBSTITUTIONS MUST APPROVED BY ENGINEER, ARCHITECT AND OWNER PRIOR TO USE.
2. FOR ANY COST SAVED DUE TO SUBSTATIONS SHALL BE PASSED ON TO OWNER. PROOF OF AMOUNT SAVED SHALL BE PROVIDED BY PLUMBERS SUPPLY SOURCE.
3. ANY REDESIGN OR AS BUILT–ING IN RESULT OF SUBSTITUTION OF MATERIALS SHALL BE CONDUCTED BY THE PLUMBERS ENGINEER OF RECORD.
4. CONTRACTORS BID SHALL BE OFF OF THE DRAWINGS PROVIDED BY MOORE CONSULTING ENGINEERS. ANY ITEMS THAT ARE "NOT INCLUDED IN THE PLUMBERS BID" ARE TO BE INCLUDED IN CONSTRUCTION AT THE COST OF THE PLUMBER AND CHANGE ORDER SHALL NOT BE GRANTED.
5. PVC CELLULAR CORE (FOAM CORE) PIPE SYSTEMS ARE NOT ALLOWED PER MOORE CONSULTING ENGINEERS STANDARDS. PVC SHALL BE SOLID WALL FOR ALL SYSTEMS.
6. TRAP SEAL DEVICES ARE NOT ALLOWED PER MOORE CONSULTING ENGINEERS STANDARDS. TRAP PRIMERS ARE TO BE INSTALLED FOR ALL FLOOR DRAINS.

BACKFLOW PREVENTION DEVICE SCHEDULE

FIXTURE	BACKFLOW PREVENTION DEVICE
INCOMING DOMESTIC WATER SERVICE (SEE NOTE #3)	WATTS LF909 REDUCED PRESSURE ZONE ASSEMBLY
WATER CLOSET	FLUSH VALVE FURNISHED WITH AN INTEGRAL VACUUM BREAKER
HAND WASHING SINKS / LAVATORIES	AIR GAP
SERVICE / MOP SINKS	FAUCET FURNISHED WITH AN INTEGRAL VACUUM BREAKER OR WATTS SERIES 7 DUAL CHECK VALVE
COMPARTMENT SINKS	FAUCET FURNISHED WITH AN INTEGRAL VACUUM BREAKER OR WATTS SERIES 7 DUAL CHECK VALVE
ICE MACHINE	WATTS LF9D DUAL CHECK VALVE
BOTTLESS WATER COOLER	WATTS LF7 DUAL CHECK VALVE
COFFEE BREWER	WATTS SD–2 – PROVIDE W/STRAINER STAINLESS STEEL LEAD FREE DUAL CHECK VALVE
DRINKING FOUNTAIN / ELECTRIC WATER COOLER	AIR GAP
TRAP SEAL	JAY R. SMITH STOPPER QUAD CLOSE TRAP SEAL
WALL HYDRANTS, HOSE BIBB, WASH DOWN FAUCET	FURNISHED WITH AN INTEGRAL VACUUM BREAKER
MAKE–UP	WATTS LF009 REDUCED PRESSURE ZONE ASSEMBLY
HOSE REEL (SEE ARCHITECTS PLANS FOR LOCATIONS AND QUANTITIES)	FURNISHED WITH BACKFLOW PREVENTER AND VACUUM BREAKER PORT

NOTE: NOT ALL DEVICES MAYBE USED ON PROJECT.

NOTES:

1. CONTRACTOR SHALL PROVIDE BACKFLOW PREVENTION DEVICES AT THE EQUIPMENT LISTED ABOVE.
2. DEVICES LISTED ARE MANUFACTURED BY WATTS REGULATOR COMPANY. CONTRACTOR MAY SUBMIT AN EQUAL FROM ANOTHER MANUFACTURER FOR REVIEW.
3. CONTRACTOR TO VERIFY REQUIREMENTS WITH LOCAL AUTHORITIES HAVING JURISDICTION.

MISCELLANEOUS PLUMBING SCHEDULE

TAG	TYPE	MANUFACTURER	MODEL #	SIZE	ACCESSORIES
RPZ–1	REDUCED PRESSURE ZONE ASSEMBLY	WATTS	LF909	2"	
BPA–1	BACKFLOW PREVENTER ASSEMBLY	WATTS	LF9D	SEE PLANS	
TMV–1	THERMO STATIC	HOLBY	1–1/2"	1–1/4"CW, 1–1/2"HW	3,4,6,13
BVA–1	BALANCING VALVE ASSEMBLY	CALEFFI	132 SERIES	1–1/2" TW	3,6,13
SA–1	SHOCK ARRESTOR	JAY R. SMITH	5000 SERIES	SEE PLANS	1,2,3,6
TP–1	TRAP PRIMER	PRECISION PLUMBING PRODUCTS	PR–500	1/2"	12,13
HB–1	HOSE BIBB	JAY R. SMITH	5675–H	3/4"	10
WF–1	WATER FILTER	SEE PLANS	SEE PLANS	SEE PLANS	3,13

NOTES/ACCESSORIES:
(1) P.D.I. AND/OR A.S.S.E. APPROVED (2) EXPANSION BELLOWS TYPE (3) IN–LINE TYPE (4) BRONZE BODY (5) SWEAT CONNECTION (6) THREADED CONNECTIONS (7) BUILT IN BY–PASS (8) REPLACEABLE THERMOSTAT (9) CW SHUT–OFF FOR EXCESSIVE HW DEMAND (10) WITH INTEGRAL VACUUM BREAKER (11) FROST PROOF (12) PROVIDE DU–U DISTRIBUTION UNIT AS REQUIRED (13) INSTALL PER MANUFACTURERS RECOMMENDATIONS

06/07/2021

MOORE
CONSULTING ENGINEERS, LLC
457 Oakshade Road, Shamong, NJ 08088
Tel: (609) 268-0500 Fax: (609) 268-5050
JEFFREY A. MOORE
PROFESSIONAL ENGINEER
NJ LIC. NO. 24GE04051000
NJ AUTH. NO. 24GA28120100
MOE PORJCET #21037

PROJECT
STONE HARBOR BEACH PATROL HEAD QUARTERS
95TH STREET & BEACH
STONE HARBOR, NJ

TITLE
PLUMBING - SCHEDULES

CONTRACTOR SHALL CHECK & VERIFY ALL DIMENSIONS AND FIELD CONDITIONS PRIOR TO STARTING CONSTRUCTION.

REV:	DESC:	DATE:
	BID ISSUE	06/07/21

DRAWN BY:	AT
CHECKED BY:	WAC
DATE:	04/20/21
SCALE:	AS NOTED

PROJECT No. 21037

P300

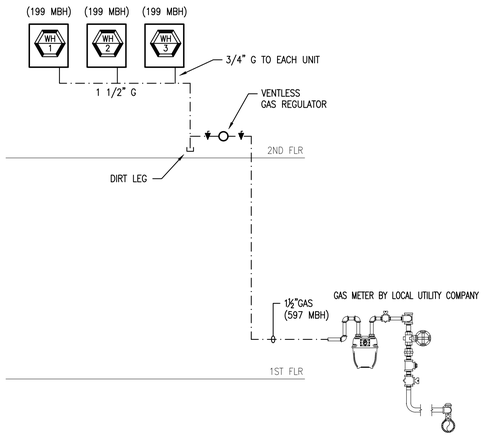

01 NATURAL GAS RISER DIAGRAM
SCALE: NONE

PROVIDE NEW GAS METER, CONTRACTOR SHALL CONFIRM GAS LOADS, MODIFICATIONS AND REQUIREMENTS WITH LOCAL UTILITY COMPANY. (TOTAL DEVELOPED LENGTH 80') 11-INCH WATER COLUMN WITH A 0.5-INCH PRESSURE DROP ON THE HOUSE SIDE OF THE METER, NEW PIPING LOAD TOTAL = 597 MBH

GAS PIPING HAS BEEN SIZED BASED ON TABLE 402.4(2) OF THE 2018 INTERNATIONAL FUEL GAS CODE.

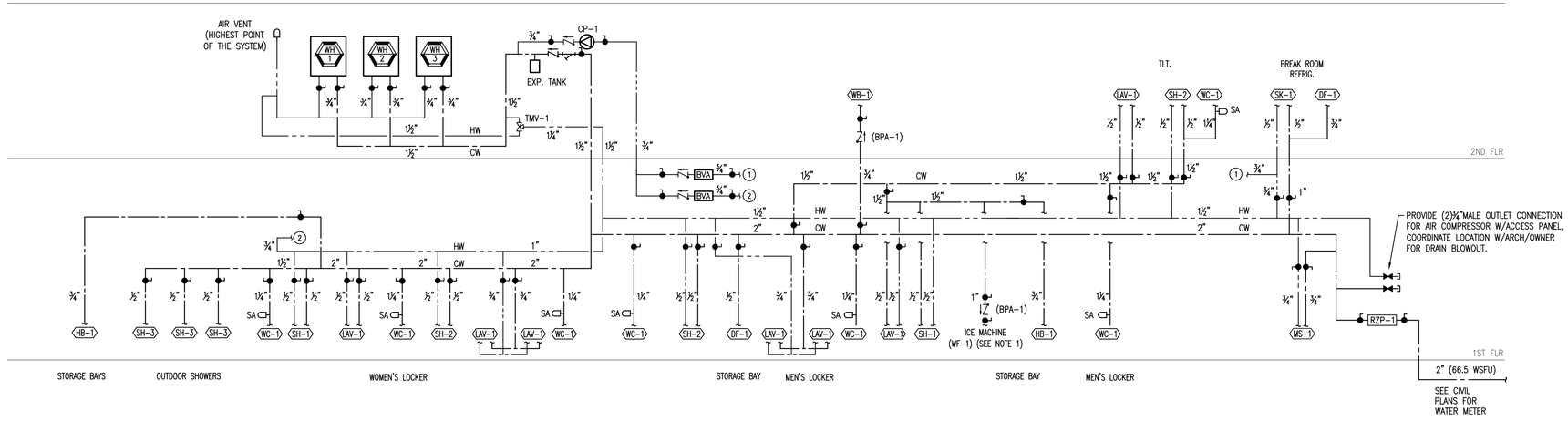

02 DOMESTIC WATER RISER DIAGRAM
SCALE: NONE

NOTES:

1. 1"CW LINE TO WF-1 NEAR ICE MACHINE, REFER TO KEY NOTE 3 ON DRAWING P201 FOR ADDITIONAL INFORMATION.

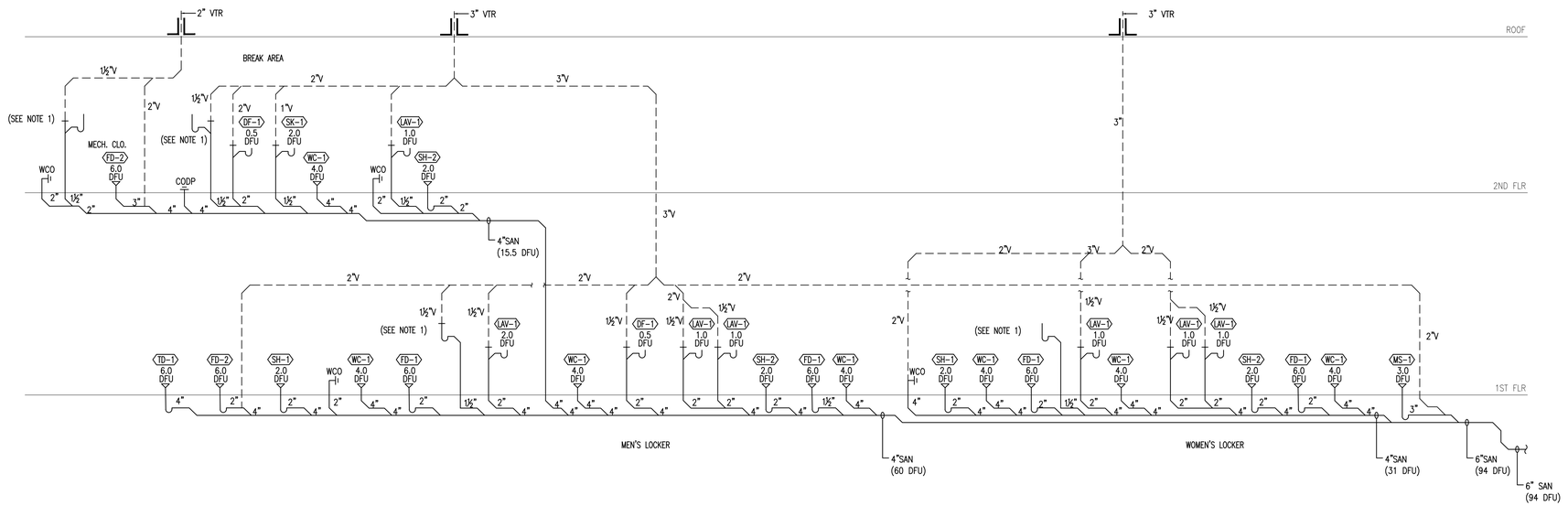

03 SANITARY AND VENT RISER DIAGRAM
SCALE: NONE

NOTES:

1. PROVIDE 1½" CONDENSATE DRAIN WITH FUNNEL FOR 1" AIR GAP.

06/07/2021

MOORE
CONSULTING ENGINEERS, LLC
457 Oakshade Road, Shamong, NJ 08088
Tel: (609) 268-0500 Fax: (609) 268-5050
JEFFREY A. MOORE
PROFESSIONAL ENGINEER
NJ LIC. NO. 24GE04051000
NJ AUTH. NO. 24GA28120100
MCE PORJCET #21037

PROJECT
STONE HARBOR BEACH PATROL HEAD QUARTERS
95TH STREET & BEACH
STONE HARBOR, NJ

TITLE
PLUMBING - RISER DIAGRAMS

CONTRACTOR SHALL CHECK & VERIFY ALL DIMENSIONS AND FIELD CONDITIONS PRIOR TO STARTING CONSTRUCTION.

REV:	DESC:	DATE:
	BID ISSUE	06/07/21

DRAWN BY:	AT
CHECKED BY:	WAC
DATE:	04/20/21
SCALE:	AS NOTED

PROJECT No. 21037

P400

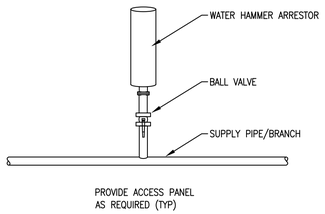

1 WATER HAMMER ARRESTOR DETAIL
SCALE: N.T.S

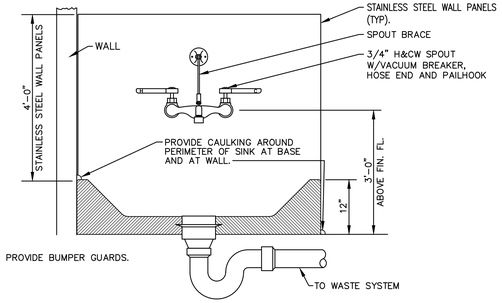

2 MOP SINK DETAIL
SCALE: N.T.S

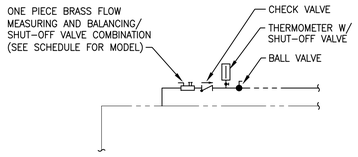

NOTES:

1. TYPICAL FOR ALL DOMESTIC HOT WATER RETURN LINES.
2. ACCESS MUST BE MAINTAINED FOR BVA.
3. BALANCE EACH VALVE IN ACCORDANCE WITH THE MANUFACTURERS GUIDELINES OF INSTALLATION, OPERATION AND MAINTENANCE TO ACHIEVE PROPER OPERATING TEMPERATURES AND FLOW RATES.
4. BALANCE THE ENTIRE DOMESTIC HOT WATER SYSTEM TO ACHIEVE PROPER OPERATING TEMPERATURES AND FLOW RATES.

3 BALANCING VALVE ASSEMBLY (BVA) DETAIL
SCALE: N.T.S

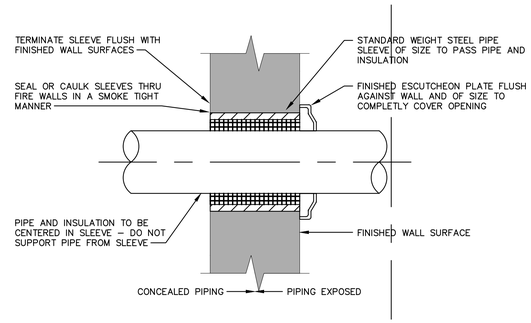

4 PIPE SLEEVE THRU WALL DETAIL
SCALE: N.T.S

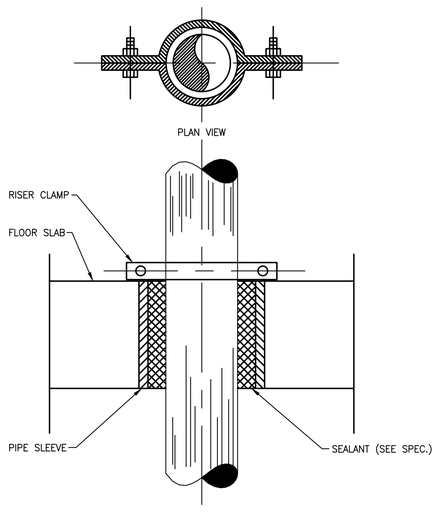

5 PIPE SLEEVE THRU FLOOR SLAB DETAIL
SCALE: N.T.S

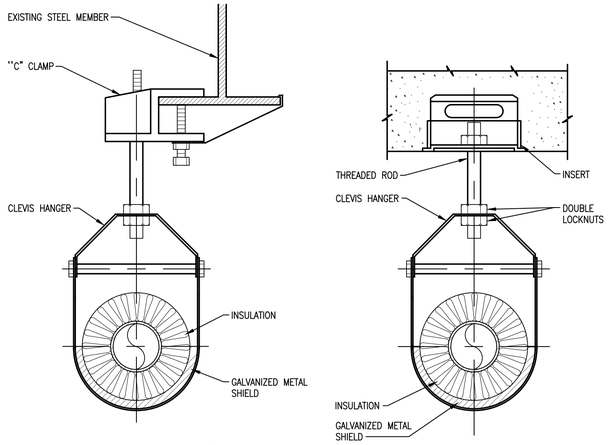

NOTE:
HANGER, ROD & INSERT SHALL BE DIPPED IN ZINC CHROMATE PRIMER PRIOR TO INSTALLATION

WITH INCOMPRESSIBLE INSULATING BLOCK AT HANGER		
PIPE DIAMETER	SHIELD LENGTH	SHIELD THICKNESS USSG
UP TO 3"	6"	18
4" TO 6"	8"	16
8" & LARGER	12"	16

WITHOUT INCOMPRESSIBLE INSULATING BLOCK AT HANGER		
PIPE DIAMETER	SHIELD LENGTH	SHIELD THICKNESS USSG
UP TO 3"	12"	18
4"	15"	16
5"	18"	16
6"	21"	16
8" & LARGER	24"	14

6 TYPICAL HANGER DETAIL
SCALE: N.T.S

06/07/2021

MOORE
CONSULTING ENGINEERS, LLC
457 Oakshade Road, Shamong, NJ 08088
Tel: (609) 268-0500 Fax: (609) 268-5050
JEFFREY A. MOORE
PROFESSIONAL ENGINEER
NJ LIC. NO. 24GE05015000
NJ AUTH. NO. 24GA28120100
MCE PORJCET #21037

PROJECT
STONE HARBOR BEACH PATROL HEAD QUARTERS
95TH STREET & BEACH
STONE HARBOR, NJ

TITLE
PLUMBING - DETAILS I

CONTRACTOR SHALL CHECK & VERIFY ALL DIMENSIONS AND FIELD CONDITIONS PRIOR TO STARTING CONSTRUCTION.

REV:	DESC:	DATE:
	BID ISSUE	06/07/21

DRAWN BY:	AT
CHECKED BY:	WAC
DATE:	04/20/21
SCALE:	AS NOTED

PROJECT No. 21037

P500

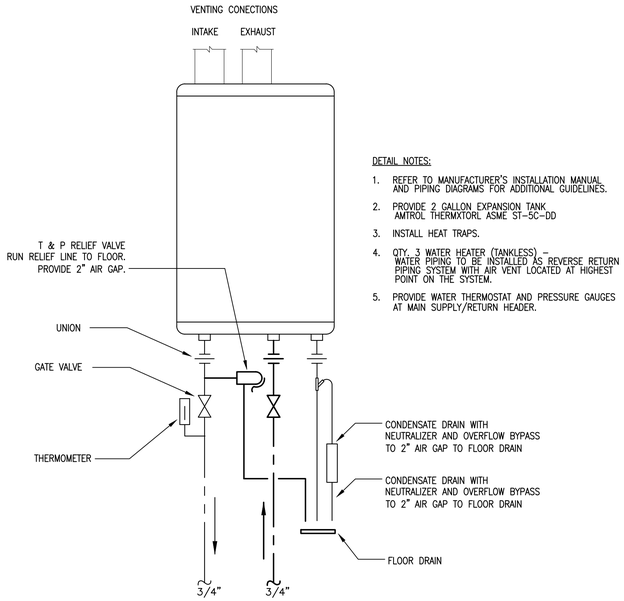

DETAIL NOTES:

1. REFER TO MANUFACTURER'S INSTALLATION MANUAL AND PIPING DIAGRAMS FOR ADDITIONAL GUIDELINES.
2. PROVIDE 2 GALLON EXPANSION TANK AMTROL THERMXTORL ASME ST-5C-DD
3. INSTALL HEAT TRAPS.
4. QTY. 3 WATER HEATER (TANKLESS) - WATER PIPING TO BE INSTALLED AS REVERSE RETURN PIPING SYSTEM WITH AIR VENT LOCATED AT HIGHEST POINT ON THE SYSTEM.
5. PROVIDE WATER THERMOSTAT AND PRESSURE GAUGES AT MAIN SUPPLY/RETURN HEADER.

1 WATER HEATER (TANKLESS)
SCALE: N.T.S

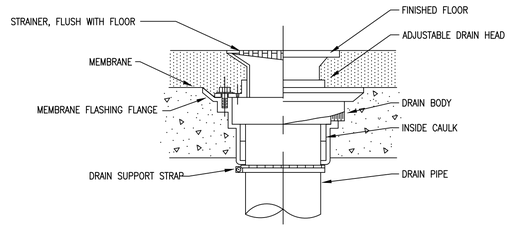

2 FLOOR DRAIN DETAIL
SCALE: N.T.S

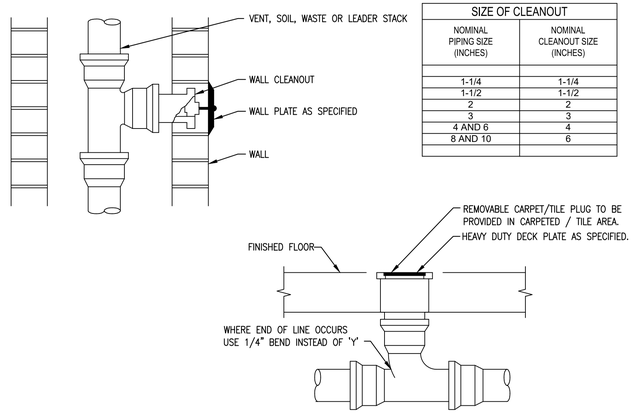

SIZE OF CLEANOUT	
NOMINAL PIPING SIZE (INCHES)	NOMINAL CLEANOUT SIZE (INCHES)
1-1/4	1-1/4
1-1/2	1-1/2
2	2
3	3
4 AND 6	4
8 AND 10	6

3 FLOOR AND WALL CLEANOUT DETAIL
SCALE: N.T.S

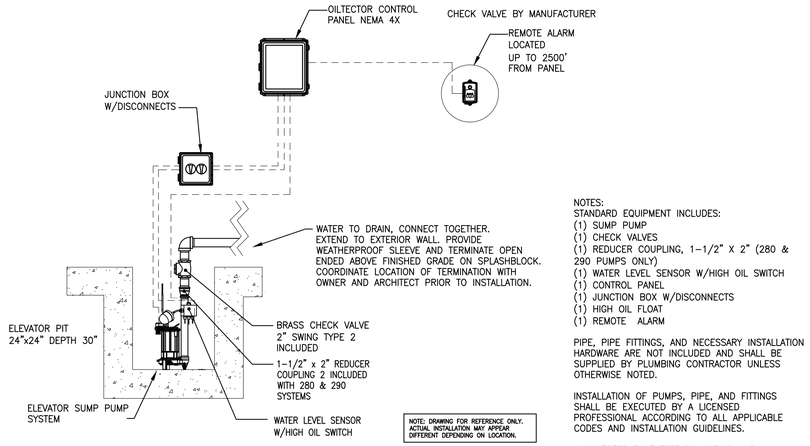

NOTES:
STANDARD EQUIPMENT INCLUDES:
(1) SUMP PUMP
(1) CHECK VALVES
(1) REDUCER COUPLING, 1-1/2" X 2" (280 & 290 PUMPS ONLY)
(1) WATER LEVEL SENSOR W/HIGH OIL SWITCH
(1) CONTROL PANEL
(1) JUNCTION BOX W/DISCONNECTS
(1) HIGH OIL FLOAT
(1) REMOTE ALARM

PIPE, PIPE FITTINGS, AND NECESSARY INSTALLATION HARDWARE ARE NOT INCLUDED AND SHALL BE SUPPLIED BY PLUMBING CONTRACTOR UNLESS OTHERWISE NOTED.

INSTALLATION OF PUMPS, PIPE, AND FITTINGS SHALL BE EXECUTED BY A LICENSED PROFESSIONAL ACCORDING TO ALL APPLICABLE CODES AND INSTALLATION GUIDELINES.

ALL NECESSARY ELECTRICAL WIRING AND CONNECTIONS SHALL BE EXECUTED BY A LICENSED PROFESSIONAL ACCORDING TO ALL APPLICABLE CODES AND INSTALLATION GUIDELINES.

4 ELEVATOR SUMP PUMP DETAIL
SCALE: N.T.S

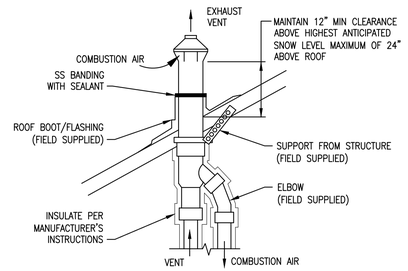

DETAIL NOTES:
1. INSTALL AND SEAL PIPE PORTAL/FLASHING PER MANUFACTURER DIRECTION.
2. USE CPVC PIPE VENTING MATERIALS.
3. PROVIDE AND INSTALL FLUE EXHAUST AND AIR INTAKE CONCENTRIC KIT FOR EACH APPLIANCE PER MANUFACTURER'S DIRECTION.
4. SUPPORT SHALL BE FIELD INSTALLED TO SECURE TERMINATION KIT TO STRUCTURE.
5. ALL VENT/FLUE PIPING PASSING THROUGH UNHEATED PORTIONS OF THE BUILDING SUBJECT TO FREEZING, SHALL BE INSULATED PER MANUFACTURER'S INSTRUCTION.
6. FOR FLUE VENT PIPING WITHIN AN AIR PLENUM PROVIDE FIREMASTER PLENUMWRAP (UL LISTED HNLJ V19) TO PROVIDE AN ENCLOSURE AND ENCAPSULATION AS REQUIRED PER CODE AND THE AHJ.
7. TWO OR MORE DIRECT VENT VERTICAL TERMINATIONS ARE VENTED NEAR EACH OTHER, THEY SHALL BE A MINIMUM 18" APART TO AVOID RECIRCULATION OF FLUE GASES OR AS DIRECTED BY MANUFACTURER'S DIRECTION.

5 CONCENTRIC ROOF VENT DETAIL
SCALE: N.T.S.

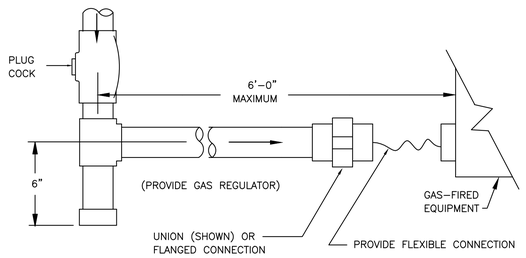

6 TYP. NAT. GAS EQUIPMENT CONNECTION
SCALE: N.T.S.

06/07/2021

MOORE
CONSULTING ENGINEERS, LLC
457 Oakshade Road, Shamong, NJ 08088
Tel: (609) 268-0500 Fax: (609) 268-5050
JEFFREY A. MOORE
PROFESSIONAL ENGINEER
N.J.LIC. NO. 24GE05015000
N.J AUTH. NO. 24GA28120100
MCE PORJCET #21037

PROJECT
STONE HARBOR BEACH PATROL HEAD QUARTERS
95TH STREET & BEACH
STONE HARBOR, NJ

TITLE
PLUMBING - DETAILS II

CONTRACTOR SHALL CHECK & VERIFY ALL DIMENSIONS AND FIELD CONDITIONS PRIOR TO STARTING CONSTRUCTION.

REV:	DESC:	DATE:
	BID ISSUE	06/07/21

DRAWN BY:	
CHECKED BY:	
DATE:	04/20/21
SCALE:	AS NOTED

PROJECT No. 21037

P501