ELSA
VEHICLE STORAGE BUILDING

LIST OF UTILITIES AND EMERGENCY CONTACT INFORMATION	
POLICE DEPARTMENT:	**LAWRENCE TOWNSHIP POLICE DEPARTMENT** 2211 LAWRENCEVILLE RD LAWRENCEVILLE, NJ 08648 (609) 896-1111
PUBLIC WORKS:	**LAWRENCE TOWNSHIP PUBLIC WORKS** 240 BAKERS BASIN ROAD LAWRENCEVILLE, NJ 08648 (609) 587-1894
SEWER:	**EWING LAWRENCE SEWERAGE AUTHORITY** 600 WHITEHEAD ROAD LAWRENCE, NJ 08648 (609) 587-4061
WATER:	**TRENTON WATER** 225 N. CLINTON AVENUE TRENTON, NJ 08609 (609) 989-3223
ELECTRIC:	**PUBLIC SERVICE ELECTRIC & GAS COMPANY** 4140 QUAKER BRIDGE ROAD LAWRENCE TOWNSHIP, NJ 08648 (609) 799-6918
CABLE:	**COMCAST** 940 PROSPECT ROAD TRENTON, NJ 08638
GAS:	**PUBLIC SERVICE ELECTRIC & GAS COMPANY** 665 WHITEHEAD ROAD LAWRENCE TOWNSHIP, NJ 08648 (609) 421-8022
TELEPHONE:	**NEW JERSEY BELL TELEPHONE** 1490 BELLEVUE AVENUE TRENTON, NJ 08638 (609) 530-9906

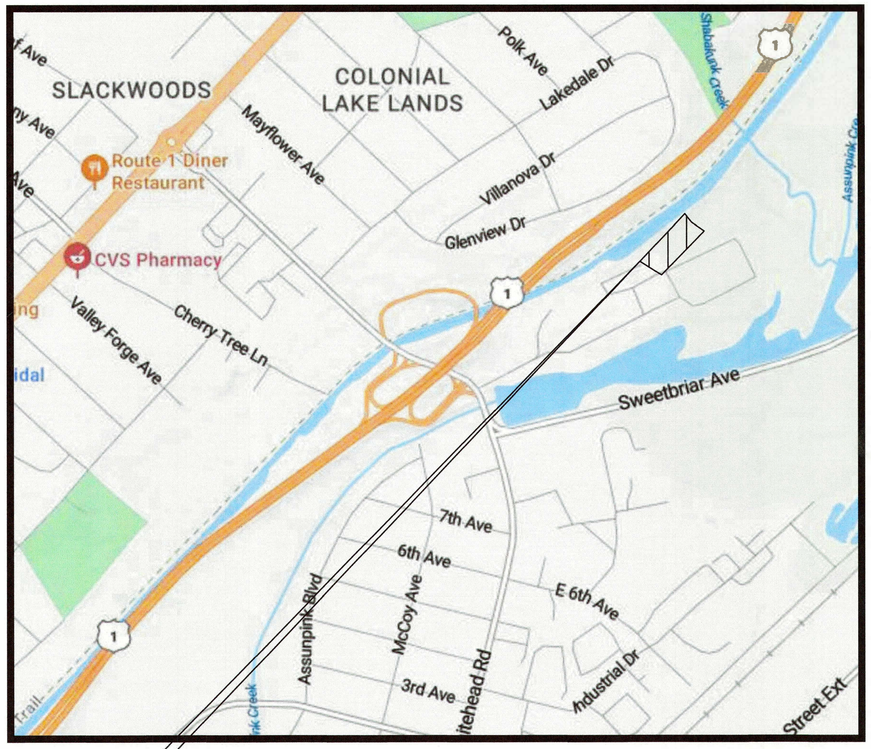

PROJECT LOCATION

PROJECT LOCATION MAP

SHEET INDEX	
SHEET #	DESCRIPTION
C-1	TITLE SHEET
C-2	LEGEND
C-3	GENERAL NOTES
C-4	EXISTING TOPOGRAPHIC CONDITIONS PLAN
C-5	OVERALL SITE PLAN
C-6	DEMOLITION PLAN
C-7	SITE PLAN
C-8	GRADING PLAN
C-9	DRAINAGE & UTILITIES PLAN
C-10	FORCE MAIN PROFILE
C-11	SOIL EROSION & SEDIMENT CONTROL PLAN
C-12	SOIL EROSION SEDIMENT CONTROL NOTES
C-13	SOIL EROSION SEDIMENT CONTROL DETAILS
C-14	CONSTRUCTION DETAILS
C-15	CONSTRUCTION DETAILS
S-1	STRUCTURAL COVER SHEET
S-2	FOUNDATION & TOP SLAB PLANS
S-3	BUILDING FLOOR PLAN
S-4	EXTERIOR ELEVATIONS
S-5	STRUCTURAL SECTIONS AND DETAILS
S-6	STRUCTURAL SECTIONS AND DETAILS
M-1.0	MECHANICAL COVER SHEET
M-2.1	MECHANICAL FLOOR PLAN
M-3.1	MECHANICAL DETAILS
M-4.1	MECHANICAL SCHEDULES
P-2.1	PLUMBING SANITARY PIPING FLOOR PLAN
P-3.1	PLUMBING UTILITY PIPING FLOOR PLAN
P-4.1	PLUMBING RISER DIAGRAMS
P-5.1	PLUMBING DETAILS
P-6.1	PLUMBING DETAILS & SCHEDULES
E-1.0	ELECTRICAL COVER SHEET
ES-2.1	ELECTRICAL SITE PLAN
E-2.1	ELECTRICAL LIGHTING PLAN
E-3.1	ELECTRICAL POWER PLAN
E-3.2	ELECTRICAL HVAC POWER PLAN
E-3.3	ELECTRICAL LIGHTING AND ELEVATION PLAN
E-4.1	ELECTRICAL SYSTEMS PLAN
E-5.1	FIRE ALARM DETAILS
E-6.1	ELECTRICAL DETAILS AND SCHEDULES
E-6.2	ELECTRICAL DETAILS

New Jersey One Call
CALL BEFORE YOU DIG
811 or 1-800-272-1000
ITS THE LAW

IT IS THE RESPONSIBILITY OF THE CONTRACTOR TO CONTACT NJ ONE CALL PRIOR TO THE START OF CONSTRUCTION. CALL FOR MARKOUTS THREE (3) FULL BUSINESS DAYS IN ADVANCE AND BEGIN EXCAVATION WITHIN 10 DAYS. ALL CONTRACTORS ON-SITE MUST HAVE THEIR OWN MARKOUT.

EWING TOWNSHIP
MERCER COUNTY, NEW JERSEY

SEPTEMBER, 2024

RVE 1901
REMINGTON & VERNICK **ENGINEERS**
2059 SPRINGDALE ROAD
CHERRY HILL, NJ 08003
(856) 795-9595, FAX (856) 795-1882
WEB ADDRESS : RVE.COM
Certification of Authorization: 24 GA 28003300
Excellence • Innovation • Service

DATE: 09.03.2024
DENNIS K. YODER
NJ PROFESSIONAL ENGINEER LIC. No. 31866

PLANS WHICH DO NOT BEAR AN EMBOSSED SEAL ARE NOT VALID.

No.	REVISION	DATE	BY	CHK
1	PER ELSA PRE REVIEW COMMENTS	06.03.24	JG	AK

TITLE SHEET

EWING LAWRANCE SEWAGE AUTHORITY
ELSA VEHICLE STORAGE BUILDING
TOWNSHIP OF EWING — MERCER COUNTY — NEW JERSEY

DRAWN BY :	DESIGN BY :	CHECKED BY :	SCALE :
J.G.	A.K.	K.C.R.	AS NOTED
DATE : 5.16.2024		SHEET No. : C-1	
JOB No. : 1102M026			

P:\CADD Projects\NJ\Mercer Co\Ewing Lawrence Sewerage Authority\01103\026 PW\building\WWW Files\C1.dwg 9/10/2025 8:33:33 AM

STANDARD LEGEND

NOTE: ALL SYMBOLS MAY NOT BE USED

UTILITIES

DESCRIPTION	EXISTING	PROPOSED
OVERHEAD WIRE	OHW	
SANITARY FORCE MAIN PIPE	FM	FM
STORM SEWER PIPE ≤ 12"	D	D
STORM SEWER PIPE > 12"	(SIZE & TYPE)	(SIZE & TYPE)
GAS SERVICE	G	G
SANITARY SEWER PIPE ≤ 12"	S	S
SANITARY SEWER PIPE > 12"	(SIZE & TYPE)	(SIZE & TYPE)
ELECTRIC SERVICE	E	E
FIBER OPTIC SERVICE	FO	FO
TELEPHONE SERVICE	T	T
COMMUNICATIONS SERVICE	C	C
IRRIGATION PIPE	IRR	IRR
WATER SERVICE	W	W
WATER SHUT-OFF		WSO
WATER METER		WM
WATER VALVE		NEW RESET
WATER HYDRANT		NEW RESET
WELL		
YARD HYDRANT		YH
METER PIT		
GAS SHUT-OFF		GSO
GAS METER		GM
GAS VALVE		NEW RESET
GAS LINE MARKER		
CLEANOUT		CO
SEWER VENT		
INLET TYPE A		NEW RESET/SET RECONSTRUCT
INLET TYPE B		NEW RESET/SET RECONSTRUCT
INLET TYPE E		NEW RESET/SET RECONSTRUCT
AREA DRAIN		
MANHOLES	SANITARY, DRAINAGE, TELEPHONE, WATER, CATV, UNDERDRAIN, ELECTRIC, GAS, UNKNOWN	NEW RESET RECONSTRUCT
HEADWALL		
HEADWALL W/ WINGS		
IRRIGATION CONTROL VALVE		NEW RESET
IRRIGATION BOX		
IRRIGATION CONTROL BOX		
SPRINKLER HEAD		90° HEAD 180° HEAD 360° HEAD
UNKNOWN VALVE		
COMMUNICATIONS PEDESTAL		
COMMUNICATIONS LINE MARKER		
TELEPHONE PEDESTAL		
TELEPHONE LINE MARKER		
ELEC. BOX		
ELEC. METER		
ELEC. TRANSFORMER PAD		
ELEC. VAULT		
ELEC. LINE MARKER		
UTILITY POLE	STANDARD, W/ LIGHT, W/ SOLAR	
GUY ANCHOR		
ELEC. OUTLET		
LIGHTS	POLE, AREA	
VENT		
VENT PIPE		

SURVEY

DESCRIPTION	EXISTING	PROPOSED
BENCHMARK LOCATION	BM X	
CROWS FOOT		
AERIAL TARGET		
CONCRETE MONUMENT		(SET)
PK / MAG NAIL / DRILL HOLE / SPIKE		(SET)
DRILL HOLE W/ WINGS		
STAKE		(SET)
HUB		(SET)
PIN W/ CAP		(SET)
IRON PIPE		(SET)
IRON PIN		(SET)
CROSS CUT		(SET)
DISK		
STONE		
REBAR		
BASELINE	7+00	8+00
CENTERLINE		
EASEMENT		
RIGHT-OF-WAY		
PROPERTY BOUNDARY		
ADJACENT PROPERTY BOUNDARY		
RAILROAD TRACKS		
STATE BOUNDARY		
MUNICIPAL / COUNTY BOUNDARY		

ENVIRONMENTAL

DESCRIPTION	EXISTING	PROPOSED
BORING LOCATION	B-#	B-#
MONITORING WELL LOCATION	MW-#	MW-#
TEST PIT LOCATION	TP-#	TP-#
FRESHWATER WETLAND FLAG	FW-#	
FRESHWATER WETLAND LINE		
FRESHWATER WETLAND BUFFER		
EDGE OF WATER		
STREAM CENTERLINE		

LANDSCAPING

DESCRIPTION	EXISTING	PROPOSED
GRASS/SOD		
DECIDUOUS TREE		SHADE ORNAMENTAL
SHRUBS / BUSH		
EVERGREENS		
STUMP		
WOODS / TREE LINE		
WIRE FENCE		
SPLIT RAIL FENCE		
WOOD / VINYL FENCE		
CHAIN-LINK FENCE		

GRADING

DESCRIPTION	EXISTING	PROPOSED
TOP OF BANK / DITCH	TB	
BOTTOM OF BANK / DITCH	BB	
CONTOUR (MAJOR)	5	5
CONTOUR (MINOR)	3	3
FLOW LINE / SWALE		
TIME OF CONCENTRATION		
SPOT GRADE	x3.48	x3.48
ROADWAY GRADE	TC5.45 GL4.95	TC5.45 GL4.95
DRAINAGE FLOW		

SITE & ROADWORK

DESCRIPTION	EXISTING	PROPOSED
EDGE OF PAVEMENT		
CURB		
PAVEMENT / CONC. / SIDEWALK	BITUMINOUS/ASPHALT, CONCRETE, BRICK/PAVERS, STONE	ASPHALT DRIVEWAY, CONCRETE, BRICK/PAVERS, STONE, MILLING
LIMIT OF EXCAVATION		
GUIDE RAIL		
BOLLARD		
MAILBOX		
SIGNS		
FLAG POLE		
BENCH		
PILE		
DETECTABLE WARNING SURFACE		
TYPICAL STRIPING		
ADA STRIPING		
TRAFFIC CONTROL BOX		
TRAFFIC LIGHT		(ARM TO SCALE)
DEPT. OF TRANSPORTATION MANHOLE		
STATE HIGHWAY DEPARTMENT	MANHOLE BOX	
RAILROAD CROSSING BEACON		
CALL BOX		
OIL FILL		
UNDERGROUND STORAGE TANK LID	UST	
RISER PIPE		
RAISED PAVEMENT MARKER		
TYPICAL NORTH ARROW	SAD-1983	

NORTH POINT TO BE USED ON STANDARD CONSTRUCTION SHEETS WHERE BEARINGS REFER TO STATE PLANE COORDINATE SYSTEM.

ABBREVIATIONS

APR.	APRON	EL.	ELEVATION	PERF.	PERFORATED	SWL	SINGLE WHITE LINE
ASB	ASBESTOS CEMENT PIPE	EX.	EXISTING	PC	POINT OF CURVATURE	SYL	SINGLE YELLOW LINE
AFF	ABOVE FINISHED FLOOR	FFE	FINISH FLOOR ELEVATION	PI	POINT OF INFLECTION	TBA	TO BE ABANDONED
ASB	ASBESTOS	FT	FEET	PT	POINT OF TANGENCY	TBR	TO BE REMOVED
AL	ALUMINUM	E.B., W.B., N.B., S.B.	EASTBOUND, WESTBOUND, NORTHBOUND, SOUTHBOUND	PSI	POUNDS PER SQUARE INCH	TC	TOP OF CURB
BL	BASELINE	GL	GUTTER LINE	PK	PARKER KAYLON MASONRY NAIL	TEL	TELEPHONE
BM	BENCH MARK	GR	GRATE	PROP.	PROPOSED	TEMP.	TEMPORARY
BIT.	BITUMINOUS	GALV.	GALVANIZED	PVC	POLYVINYL CHLORIDE PIPE	TYP.	TYPICAL
BLDG.	BUILDING	HW	HEADWALL	PVC	POINT OF VERTICAL CURVATURE	UD	UNDERDRAIN
BGS	BELOW GROUND SURFACE	HDPE	HIGH DENSITY POLYETHYLENE PIPE	PVI	POINT OF VERTICAL INTERSECTION	UP	UTILITY POLE
CL	CENTERLINE	INV.	INVERT	PVT	POINT OF VERTICAL TANGENCY	V	VOLTS
CIP	CAST IRON PIPE	IP	IRON PIN	R	RADIUS	VAR.	VARIES
CONC.	CONCRETE	IN	INCHES	RCP	REINFORCED CONCRETE PIPE	WM	WATER METER
CMP	CORRUGATED METAL PIPE	JB	JUNCTION BOX	RMC	RIGID METALLIC CONDUIT		
CULV.	CULVERT	LSA	LANDSCAPED AREA	R.O.W.	RIGHT OF WAY		
CS	CARBON STEEL	LF	LINEAR FEET	R.R.	RAILROAD		
CF	CUBIC FEET	LST	LANDSCAPE TIE	RTE.	ROUTE		
CY	CUBIC YARDS	LOM	LIMIT OF MILLING	SAN.	SANITARY		
CMU	CONCRETE MASONRY UNIT	LOP	LIMIT OF PAVING	SS	STAINLESS STEEL		
D.C.	DEPRESSED CURB	MB	MAILBOX	SWK.	SIDEWALK		
DH	DRILL HOLE	MAX.	MAXIMUM	SHD	STATE HIGHWAY DEPARTMENT		
DIA.	DIAMETER	MIN.	MINIMUM	SHLD.	SHOULDER		
DIP	DUCTILE IRON PIPE	MH	MANHOLE	STY.	STORY		
DWY	DRIVEWAY	NO.	NUMBER	STA.	STATION		
DYL	DOUBLE YELLOW LINE	N.T.S.	NOT TO SCALE				
		P	PIPE				

DRAWING NOMENCLATURE REPRESENTATION

EXISTING CONDITIONS — PROPOSED CONDITIONS

RVE 1901
REMINGTON & VERNICK **ENGINEERS**
2059 SPRINGDALE ROAD
CHERRY HILL, NJ 08003
(856) 795-9595, FAX (856) 795-1882
WEB ADDRESS : RVE.COM
Certification of Authorization: 24 GA 28003300
Excellence • Innovation • Service

Dennis K. Yoder
DATE: 09-03-2024
DENNIS K. YODER
NJ PROFESSIONAL ENGINEER LIC. No. 31866

Jessica D. Hauber
DATE: 09-03-2024
JESSICA D. HAUBER
NJ PROFESSIONAL ENGINEER LIC. No. 51487

PLANS WHICH DO NOT BEAR AN EMBOSSED SEAL ARE NOT VALID.

No.	REVISION	DATE	BY	CHK
3	PER TOWNSHIP CHECKLIST	12/02/24	ACF	DY
2	PER NJDEP COMMENTS	10/30/24	ACF	DY
1	PER ELSA PRE REVIEW	06/03/24	ACF	DY

LEGEND

EWING LAWRANCE SEWAGE AUTHORITY

MINOR SITE PLAN - ELSA VEHICLE STORAGE BUILDING
600 WHITEHEAD ROAD; BLOCK 1202, LOT 2
TOWNSHIP OF LAWRENCE — MERCER COUNTY — NEW JERSEY

DRAWN BY:	DESIGN BY:	CHECKED BY:	SCALE:
A.C.F.	-	J.D.H.	AS NOTED

DATE: 05/16/2024

JOB No.: 1102M026

SHEET No.: C-2

J:\Jobs\Projects\Mercer Co\VEL\A11102M026 - ELSA Vehicle Storage Building\Design\3. 1102M026 Drawings\EDG - 1102M026.dwg 12/9/2024 1:00:20 PM

GENERAL NOTES:

1. CONTRACTOR SHALL VERIFY ALL DIMENSIONS AND EXISTING CONDITIONS IN THE FIELD PRIOR TO THE START OF CONSTRUCTION, ANY ERRORS OR DISCREPANCIES SHALL BE BROUGHT TO THE ATTENTION OF THE ENGINEER IMMEDIATELY.
2. LOCATION OF EXISTING UTILITIES ARE APPROXIMATE AND MUST BE VERIFIED IN THE FIELD PRIOR TO THE START OF CONSTRUCTION.
3. THE CONTRACTOR SHALL USE EXCAVATED MATERIALS FOR BACKFILL UNLESS OTHERWISE DIRECTED BY THE ENGINEER.
4. ALL PAVED AND CONCRETE AREAS DISTRIBUTED DURING CONSTRUCTION SHALL BE RESTORED TO EXISTING CONDITION AT LEAST EQUAL TO THAT WHICH EXISTED PRIOR TO THE START OF CONSTRUCTION.
5. ALL GRASSED OR WOODED AREAS DISTRIBUTED DURING CONSTRUCTION SHALL BE TOPSOILED AND SEEDED.
6. ALL FILL SHALL BE PLACED IN 8" LAYERS AND THOROUGHLY COMPACTED TO THE SATISFACTION OF THE ENGINEER. IF BORROW FILL IS REQUIRED, IT SHALL BE SUBJECT TO THE APPROVAL OF THE ENGINEER.
7. THE CONTRACTOR SHALL BE RESPONSIBLE FOR THE LOCATION AND PRESERVATION OF THE UNDERGROUND AND SURFACE UTILITIES AND STRUCTURES AT OR ADJACENT TO THE SITE OF CONSTRUCTION AND IT SHALL BE AT HIS OWN EXPENSE TO REPAIR OR REPLACE ANYTHING THAT IS DAMAGED.
8. APPROXIMATE DEPTH OF ALL WATER MAIN IS ± 4 FEET.
9. ALL CONSTRUCTION DETAILS NOT SHOWN SHALL BE IN ACCORDANCE WITH N.J.D.O.T. STANDARDS AS DETAILED IN:
   - "STANDARD ROADWAY CONSTRUCTION/TRAFFIC CONTROL/BRIDGE CONSTRUCTION DETAILS."
   - "ELECTRICAL BUREAU STANDARD DETAILS: 2001."

   INCLUDING ALL APPLICABLE BASELINE DOCUMENT CHANGES AND APPENDICES. THESE DETAILS MAY BE PURCHASED THROUGH THE N.J.D.O.T. PLANS AND SPECIFICATION CENTER AT:

   1035 PARKWAY AVENUE,
   TRENTON, NEW JERSEY
   08625–0600
   (TELEPHONE: 1–609–530–2098)
10. SEPARATE PAYMENT WILL NOT BE MADE FOR SAW CUTTING OF ANY KIND, BUT THE COST SHALL BE INCLUDED IN THE VARIOUS ITEMS OF THE PROPOSAL.
11. PAYMENT FOR JOINT MATERIAL FOR ALL CONCRETE WORK WILL NOT BE MEASURED BUT SHALL BE INCLUDED IN THE VARIOUS ITEMS OF THE PROPOSAL.
12. MANHOLE CASTINGS THAT ARE TO BE RESET SHALL BE RESET ¼" LOWER THAN THE PROPOSED PAVEMENT ELEVATION.
13. ALL GRASS AND WOODED AREAS DISTURBED DURING CONSTRUCTION SHALL BE BACKFILLED AS PER SOILS CONSERVATION DISTRICT REQUIREMENTS.
14. THE NEW JERSEY DEPARTMENT OF TRANSPORTATION (NJDOT) STANDARD SPECIFICATION FOR ROAD AND BRIDGE CONSTRUCTION ALONG WITH THE 2010 STATE AID SUPPLEMENTAL SPECIFICATION AS MODIFIED SHALL GOVERN THIS PROJECT.
15. ALL UNUSED MATERIAL EXCAVATED FROM THE PROJECT SITE ARE TO BE DISPOSED OF AT AN APPROVED FACILITY. MANIFESTS ARE TO BE SUBMITTED TO THE ENGINEER.
16. THE CONTRACTOR SHALL BE RESPONSIBLE FOR ALL SOIL EROSION AND SEDIMENT CONTROL MEASURES AS INDICATED IN THE SCD PLANS AND SPECIFICATIONS. SEPARATE PAYMENT FOR ALL ASSOCIATED COSTS WILL NOT BE MADE, BUT SHALL BE INCLUDED UNDER VARIOUS ITEMS OF THE PROPOSAL.
17. 2007 NJDOT STANDARD SPECIFICATIONS FOR ROAD AND BRIDGE CONSTRUCTION AND AS AMENDED PER COUNTY SPECIFICATIONS SHALL GOVERN THIS PROJECT.
18. ALL UTILITY WORK SHALL BE CONSTRUCTED TO ALLOW UNINTERRUPTED SERVICE TO ADJACENT PROPERTIES.
19. EXISTING WATER MAIN, SANITARY SEWER, GAS MAIN, STORM SEWER AND ALL OTHER PROCESS UTILITIES SHALL BE FULLY SUPPORTED AND MAINTAINED DURING INSTALLATION OF THE PROPOSED UTILITY WORK, SERVICES, LATERALS AND BUILDING CONSTRUCTION.
20. CONTRACTOR SHALL CONFIRM LOCATION OF ALL SERVICE CONNECTION DURING CONSTRUCTION.
21. THE INSTALLATION OF NEW SERVICE LATERALS SHALL INCLUDE ALL PIPING, CORPORATION STOP, CURB STOP, CURB BOX AND RECONNECTION OF EXISTING SERVICE.
22. ALL UTILITY CROSSINGS/OFFSETS SHALL INCLUDE COMPACTED STABILIZATION MATERIAL FOR FULL LENGTH OF CROSSING.
23. INSTALLATION OF ALL SANITARY SEWER AND MANHOLES SHALL INCLUDE TEMPORARY BY–PASS PUMPING. ALL COSTS ASSOCIATED WITH THE TEMPORARY PUMPING SHALL BE INCLUDED IN THE VARIOUS LINE ITEMS TO INSTALL SAID MATERIALS, COMPLETE.
24. CONTRACTOR SHALL VERIFY ALL DIMENSIONS AND EXISTING CONDITIONS IN THE FIELD PRIOR TO THE START OF CONSTRUCTION. ANY ERRORS OR DISCREPANCIES SHALL BE BROUGHT TO THE ATTENTION OF THE ENGINEER DURING SHOP DRAWING REVIEW.
25. SEPARATE PAYMENT WILL NOT BE MADE FOR EXCAVATION, DEWATERING, FITTINGS, PIPE BEDDING, SHEETING, BRACING, SHORING, INLET CONNECTIONS, TRAPS, AND SUITABLE BACKFILL MATERIAL INVOLVED IN ALL PIPE AND ASSOCIATED STRUCTURES REMOVAL, RECONSTRUCTION AND INSTALLATION, BUT THE COST SHALL BE INCLUDED IN THE VARIOUS ITEMS OF THE PROPOSAL REGARDLESS OF DEPTH.
26. WORK TO BE PERFORMED BY PSE&G TO BE PAID FOR UNDER SEPARATE CONTRACT AND IS NOT INCLUDED AS A PART OF THIS BID.
27. PAYMENT FOR OBSTRUCTION REMOVAL SUCH AS TREE ROOTS AND EXISTING INFRASTRUCTURE WHICH MAY INTERFERE WITH THE PROPOSED CONSTRUCTION, SHALL BE INCLUDED IN THE ITEM "SITE WORK".
28. EXISTING SANITARY SEWER MAINS & LATERALS SHOWN MAY NOT BE ACCURATE DUE TO INCOMPLETE UTILITY INFORMATION. CONTRACTOR IS RESPONSIBLE FOR LOCATING, CLEANING, JETTING, AND VACUUMING ALL EXISTING SANITARY SEWER LINES, INLET AND MANHOLE STRUCTURES. EXISTING CLEANOUTS AND SERVICE LATERALS SHALL BE REPLACED AS DIRECTED BY THE RESIDENT ENGINEER. CONTRACTOR SHALL PREPARE SUBMITTAL UPON PROPER FIELD LOCATION AND INVERT VERIFICATION SHOWING REVISED SEWER LAYOUT IF APPLICABLE. PAYMENT SHALL BE INCLUDED UNDER VARIOUS SANITARY SEWER ITEMS.
29. A MINIMUM OF ONE (1) FOOT OF PAVING SHALL BE REMOVED AROUND THE PERIMETER OF ALL MANHOLE AND INLET CASTINGS TO ENSURE A MINIMUM OF TWO (2) INCHES OF SURFACE COURSE IS PROVIDED AROUND THEM. THIS WORK SHALL BE INCLUDED IN THE UNIT PRICE BID FOR "HOT MIX ASPHALT 9.5M64 SURFACE COURSE".
30. AT ALL LIMITS OF PAVING (L.O.P.) THE CONTRACTOR SHALL SAWCUT, TACK COAT AND SEAL TO MATCH EXISTING PAVEMENT. SEPARATE MEASUREMENT AND PAYMENT FOR ALL THIS WORK SHALL NOT BE MADE AND ALL COSTS SHALL BE INCLUDED IN THE PAVING ITEMS OF BID.
31. ALL TREE REMOVALS ARE TO BE VERIFIED BY THE ENGINEER PRIOR TO REMOVAL. ALL TREE PLANTINGS ARE APPROXIMATE WITH FINAL LOCATIONS TO BE ESTABLISHED IN THE FIELD BY THE AUTHORITY.
32. THE CONTRACTOR SHALL UTILIZE A QUALIFIED ARBORIST FOR ALL TREE TRIMMINGS.
33. ALL SANITARY & STORM SEWER CONSTRUCTION SHALL COMPLY WITH THE AUTHORITY'S "DESIGN, CONSTRUCTION, INSPECTION AND TESTING MANUAL". COST ASSOCIATED WITH TESTING (INFILTRATION, EXFILTRATION, PIPE ALIGNMENT, TELEVISION) SHALL BE INCLUDED IN THE VARIOUS PIPE ITEMS OF THE PROPOSAL.
34. PRESSURE TESTING OF ALL SANITARY & STORM SEWER SEWERS (INCLUDING RCP) SHALL BE PERFORMED IN ACCORDANCE WITH AUTHORITY STANDARDS. RCP SEWERS ABOVE 24 INCHES IN DIAMETER SHALL BE JOINT TESTED IN ACCORDANCE WITH ASTM.
35. ALL RCP SHALL BE LINED ON THE INTERIOR WITH A COAT OF TAR EPOXY SEAL COAT WITH A MINIMUM OF 4 MILS IN THICKNESS (DRY FILM THICKNESS)
36. THE AUTHORITY MUST BE GIVEN 72 HOURS ADVANCE NOTICE OF STORM/SANITARY SEWER/WATERMAIN WORK AND THE REPRESENTATIVES MUST WITNESS THE WORK AND CONNECTION.
37. MANHOLE FRAMES AND COVERS ARE TO PROVIDE FOR A THIRTY–INCH CLEAR–OPENING AT THE COVER IN ORDER TO ALLOW EASIER ACCESS UNDER CONFINED SPACE ENTRY REQUIREMENTS. CAMPBELL FOUNDRY PATTERN NUMBER 1009 OR NJDOT APPROVED EQUAL.
38. MANHOLE COVERS SHALL BE A SOLID TYPE MARKED WITH "ELSA SEWER".
39. THE CONTRACTOR SHALL NOT BE PERMITTED TO UTILIZE ANY KIND OF HMA VIBRATORY ROLLER OR VIBRATORY DRUM COMPACTOR ON THIS PROJECT. ALTERNATIVE COMPACTION TECHNIQUES, SUCH AS STATIC ROLLERS, SHALL BE APPROVED BY THE RESIDENT ENGINEER.

ENVIRONMENTAL COMMITMENTS:

1. IMPLEMENT SOIL EROSION AND SEDIMENT CONTROL MEASURES DURING CONSTRUCTION AS PER SCD DETAILS.
2. IMPLEMENT STANDARD MEASURE FOR CONSTRUCTION RELATED NOISE AND AIR QUALITY IMPACT CONTROLS AS PER OSHA.
3. BEST MANAGEMENT PRACTICE WILL BE UTILIZED DURING CONSTRUCTION TO PREVENT SEDIMENT FROM ENTERING ENVIRONMENTALLY SENSITIVE AREAS AS PER DEP REGULATIONS.
4. CONSTRUCTION STAGING ACTIVITIES (INCLUDING STORAGE OF EQUIPMENT, VEHICLES AND MATERIALS) ARE PROHIBITED IN THE ENVIRONMENTALLY SENSITIVE AREA OR GREEN ACRES ENCUMBERED PROPERTIES.

RVE 1901
REMINGTON & VERNICK ENGINEERS
2059 SPRINGDALE ROAD
CHERRY HILL, NJ 08003
(856) 795-9595, FAX (856) 795-1882
WEB ADDRESS : RVE.COM
Certification of Authorization: 24 GA 28003300
Excellence • Innovation • Service

DATE: 09-03-2024
DENNIS K. YODER
NJ PROFESSIONAL ENGINEER LIC. No. 31866

DATE: 09-03-2024
JESSICA D. HAUBER
NJ PROFESSIONAL ENGINEER LIC. No. 51487

PLANS WHICH DO NOT BEAR AN EMBOSSED SEAL ARE NOT VALID

No.	REVISION	DATE	BY	CHK
3	PER TOWNSHIP CHECKLIST	12/02/24	ACF	DY
2	PER NJDEP COMMENTS	10/30/24	ACF	DY
1	PER ELSA PRE REVIEW	06/03/24	ACF	DY

GENERAL NOTES

EWING LAWRANCE SEWAGE AUTHORITY

MINOR SITE PLAN - ELSA VEHICLE STORAGE BUILDING
600 WHITEHEAD ROAD; BLOCK 1202, LOT 2

TOWNSHIP OF LAWRENCE MERCER COUNTY NEW JERSEY

DRAWN BY:	DESIGN BY:	CHECKED BY:	SCALE:
A.C.F.	-	J.D.H.	AS NOTED

DATE: 05/16/2024
JOB No.: 1102M026
SHEET No.: C-3

J:\Cadd\Projects\Mercer Co\ELSA\1102M026 - ELSA Vehicle Storage Building\Drawings\1102M026.dwg 12/02/2024 1:02:21 PM

SURVEY NOTES & REFERENCES:

1. THE HORIZONTAL DATUM IS BASED ON THE NEW JERSEY STATE PLANE COORDINATE SYSTEM (NAD-1983 / 2011 ADJ.) AND THE VERTICAL DATUM IS BASED ON NAVD-1988 / GEOID 2012b (ADD 1.07 FEET TO THESE ELEVATIONS TO CONVERT TO NGVD-1929 DATUM)
2. PROPERTY AND RIGHT-OF-WAY LINES SHOWN ON THESE PLANS ARE BASED ON THE CURRENT TAX MAPS OF THE TOWNSHIP OF EWING, MERCER COUNTY, NEW JERSEY. ADJOINING PROPERTY AND RIGHT-OF-WAY LINES ARE SHOWN FOR GRAPHICAL INFORMATION ONLY AND HAVE NOT BEEN FIELD VERIFIED.
3. EXISTING TOPOGRAPHIC CONDITIONS SHOWN ON THIS PLAN ARE BASED ON AERIAL MAPPING PREPARED BY COOPER NOR EAST MAPPING, DATE OF FLIGHT FEBRUARY 12, 2022 AND WERE FIELD EDITED AND VERIFIED BY REMINGTON & VERNICK ENGINEERS UNDER THE SUPERVISION OF CHARLES E. ADAMSON, N.J.P.L.S. LICENSE NO. 42627. THE SURVEY WORK WAS COMPLETED ON OCTOBER 11, 2022.
4. THIS PLAN AND SURVEY DOES NOT CERTIFY TO THE LOCATION, BOTH HORIZONTAL AND VERTICAL OF ANY UNDERGROUND UTILITY OR STRUCTURE THAT WAS NOT EXPOSED FOR DIRECT MEASUREMENT.

ACREAGE CHART

TOTAL ACREAGE OF PARCEL= 23.3 ACRES

TOTAL ACREAGE OF AREA CONFINED WITHIN THE PARTIAL LOI-VERIFICATION BOUNDARY= 1.3 ACRES

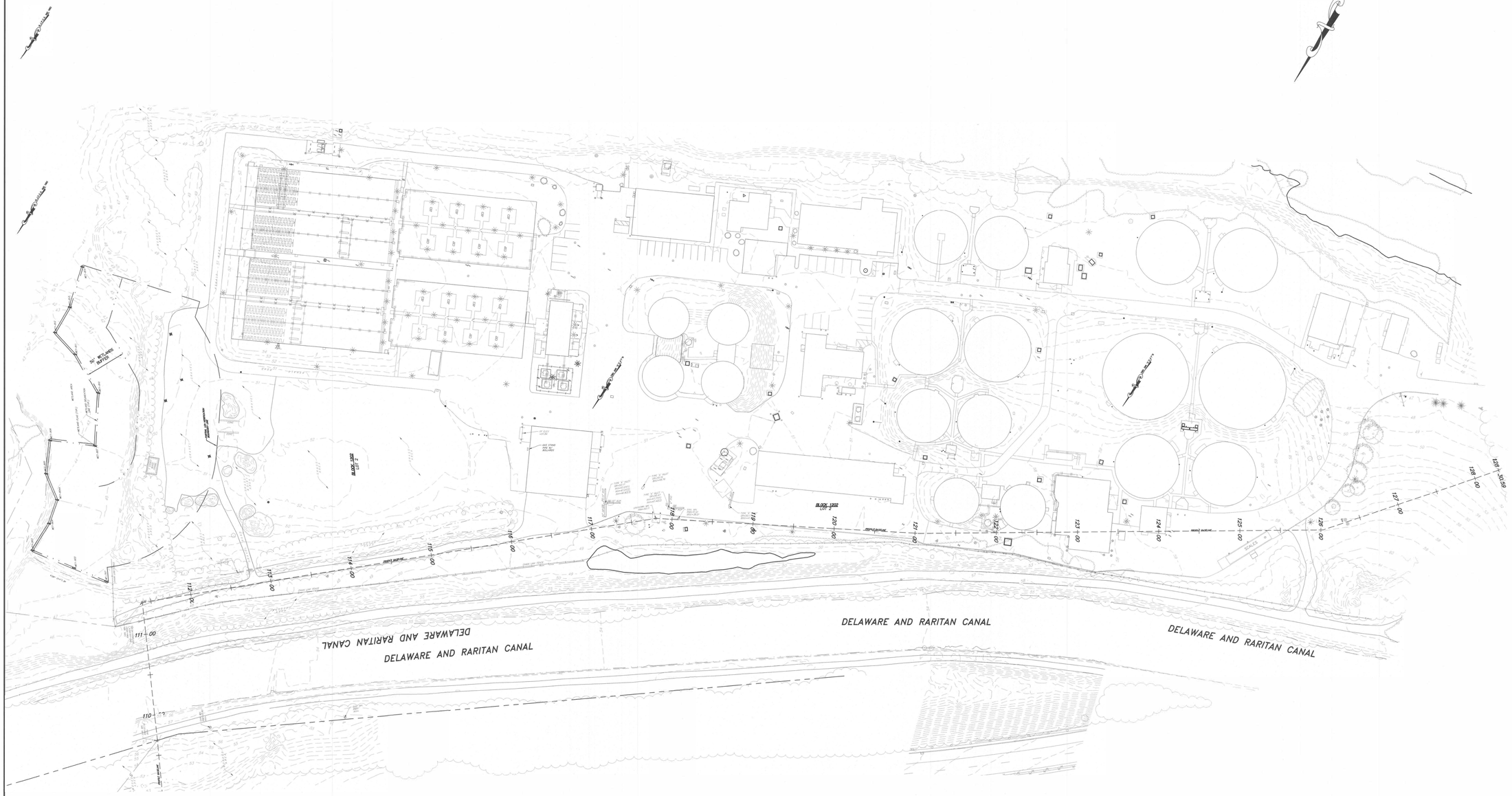

PLAN VIEW

SCALE: 1"=60'

GRAPHIC SCALE

0 60' 120' 180'

1 INCH = 60 FT.

RVE 1901

REMINGTON & VERNICK ENGINEERS

2059 SPRINGDALE ROAD
CHERRY HILL, NJ 08003
(856) 795-9595, FAX (856) 795-1882
WEB ADDRESS : RVE.COM
Certification of Authorization: 24 GA 28003300

Excellence Innovation Service

DATE: 05-16-2024

CHARLES E. ADAMSON
NJ PROFESSIONAL LAND SURVEYOR LIC. No. 42627

PLANS WHICH DO NOT BEAR AN EMBOSSED SEAL ARE NOT VALID.

No.	REVISION	DATE	BY	CHK
3	PER TOWNSHIP CHECKLIST	12/02/24	ACF	DY
2	PER NJDEP COMMENTS	10/30/24	ACF	DY
1	PER ELSA PRE REVIEW	06/03/24	ACF	DY

EXISTING TOPOGRAPHIC CONDITIONS PLAN

EWING LAWRANCE SEWAGE AUTHORITY

MINOR SITE PLAN - ELSA VEHICLE STORAGE BUILDING
600 WHITEHEAD ROAD; BLOCK 1202, LOT 2

TOWNSHIP OF LAWRENCE MERCER COUNTY NEW JERSEY

DRAWN BY :	DESIGN BY :	CHECKED BY :	SCALE :
A.C.F.	-	J.D.H.	AS NOTED
DATE : 05/16/2024		SHEET No. : C-4	
JOB No. : 1102M026			

J:\Civil Projects\NJ\Mercer Cnty\ELSA\1102M026 - ELSA Vehicle Storage Building\Dwgs\3. 1102M026 Dwgs\grdC - 1102M026.dwg 12/02/2024 4:17:47 PM

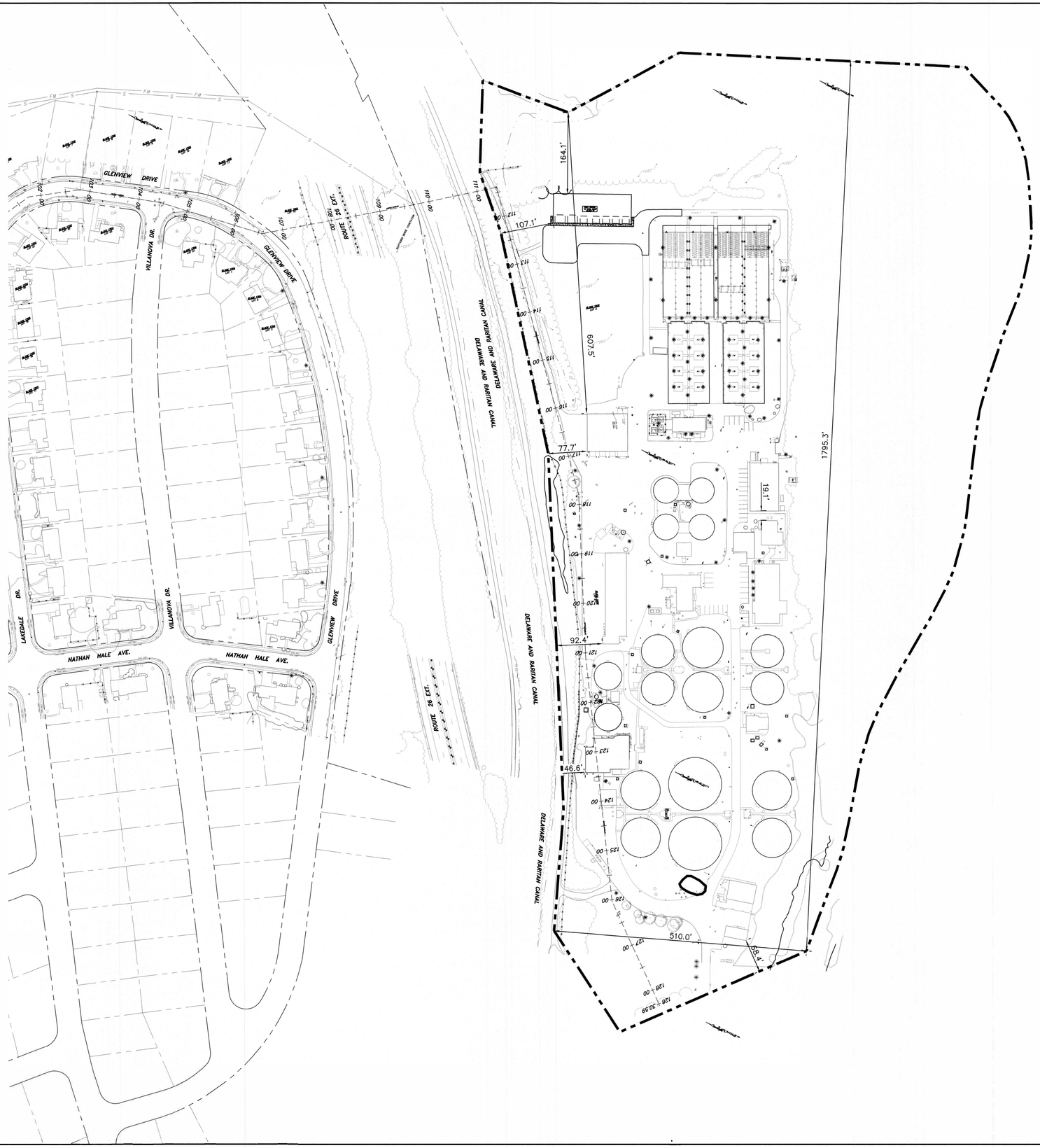

NJ SPCS NAD-83

SCHEDULE OF REQUIREMENTS

ZONE: LIMITED INDUSTRIAL (LI)

CODE	PERMITTED	EXISTING	PROPOSED
INDIVIDUAL PRINCIPAL USE			
MINIMUM LOT AREA	5 AC.	34.32 AC. ±1,494,818 SF	NO CHANGE
MINIMUM LOT FRONTAGE	400 FT	N/A	NO CHANGE
MINIMUM LOT WIDTH	400 FT	510.0 FT	NO CHANGE
MINIMUM LOT DEPTH	400 FT	1,795.3 FT	NO CHANGE
MINIMUM FRONT YARD	125 FT	N/A	NO CHANGE
MINIMUM SIDE YARD	75 FT	46.4 FT (E)*	NO CHANGE
MINIMUM REAR YARD	75 FT	607.5 FT	164.1 FT
MAXIMUM BUILDING HEIGHT	38 STORIES OR 3 FT	3 STORIES	NO CHANGE
MAXIMUM IMPERVIOUS SURFACE RATIO	0.75	0.38	.38
MAXIMUM FLOOR AREA RATIO	0.20	0.03	0.03
ACCESSORY BUILDING AND USES			
NO ACCESSORY BUILDING OR USE SHALL BE LOCATED IN A FRONT YARD	NO ACCESSORY BUILDING OR USE SHALL BE LOCATED IN A FRONT YARD	N/A	NO CHANGE
MINIMUM SIDE YARD	35 FT	46.6 FT	NO CHANGE
MINIMUM REAR YARD	35 Ft	607.5 FT	164.1 FT
MINIMUM DISTANCE TO OTHER BUILDINGS	50 Ft	19.1 FT (E)*	NO CHANGE
MAXIMUM HEIGHT	HALF THE HEIGHT OF THE PRINCIPAL BUILDING TO WHICH IT RELATES	2 STORIES (E)*	NO CHANGE

REQUESTED BULK VARIANCE LIST:

1. §430.J – STREAM BUFFERS. THERE SHALL BE NO DISTURBANCE, INCLUDING BUT NOT LIMITED TO, GRADING AND THE PLACEMENT OF BUILDINGS, WITHIN 100 FEET OF THE 100-YEAR FLOOD PLAIN OF A STREAM ALONG ALL STREAM CORRIDORS OR FROM THE UPPER BANK FOR WHICH A FLOOD PLAIN LINE HAS NOT BEEN ESTABLISHED.
2. §430.J.3C – A RIPARIAN ZONE 50 FEET WIDE SHALL BE MAINTAINED ALONG BOTH SIDES OF ALL WATERS.

REQUESTED CHECKLIST WAIVER LIST:

1. SUBMISSION ITEM NO. 18: METES AND BOUNDS SHOWING DIMENSIONS, BEARINGS, CURVE DATA, LENGTH OF TANGENTS, RADII, ARCS, CHORDS AND CENTRAL ANGLES AS FOLLOWS: A. OUTER BOUNDARIES OF LOT(S) B. PROPOSED NEW INTERIOR LOT(S) OR RIGHTS-OF-WAY
2. SUBMISSION ITEM NO. 25: COPY OF AND DELINEATION OF ANY EXISTING OR PROPOSED DEED RESTRICTIONS OR COVENANTS.
3. SUBMISSION ITEM NO. 26: ANY EXISTING OR PROPOSED EASEMENT OR LAND RESERVED FOR OR DEDICATED TO PUBLIC USE. A. METES AND BOUNDS DESCRIPTION.
4. SUBMISSION ITEM NO. 50: LIGHTING PLAN & DETAILS.
5. SUBMISSION ITEM NO. 51: LANDSCAPE PLAN OVERLAID ON GRADING PLAN, PLANT LIST, PLANTING DETAILS AND TREE PROTECTION DETAILS. PLANT LIST TO INCLUDE: BOTANICAL NAME, COMMON NAME, QUANTITY, SIZE AT TIME OF PLANTING, ROOT CONDITION, AND SPACING.

GRAPHIC SCALE

0 100' 200' 300'

1 INCH = 100 FT.

RVE 1901

REMINGTON & VERNICK **ENGINEERS**

2059 SPRINGDALE ROAD
CHERRY HILL, NJ 08003
(856) 795-9595, FAX (856) 795-1882
WEB ADDRESS : RVE.COM
Certification of Authorization: 24 GA 28003300
Excellence • Innovation • Service

Dennis K. Yoder
DATE: 09-03-2024
DENNIS K. YODER
NJ PROFESSIONAL ENGINEER LIC. No. 31866

Jessica D. Hauber
DATE: 09-03-2024
JESSICA D. HAUBER
NJ PROFESSIONAL ENGINEER LIC. No. 51487

No	REVISION	DATE	BY	CHK
3	PER TOWNSHIP CHECKLIST	12/02/24	ACF	DY
2	PER NJDEP COMMENTS	10/30/24	ACF	DY
1	PER ELSA PRE REVIEW	06/03/24	ACF	DY

OVERALL SITE PLAN

EWING LAWRANCE SEWAGE AUTHORITY

MINOR SITE PLAN - ELSA VEHICLE STORAGE BUILDING
600 WHITEHEAD ROAD; BLOCK 1202, LOT 2

TOWNSHIP OF LAWRENCE MERCER COUNTY NEW JERSEY

DRAWN BY :	DESIGN BY :	CHECKED BY :	SCALE :
A.C.F.	-	J.D.H.	AS NOTED

DATE : 05/16/2024

JOB No. : 1102M026

SHEET No. : C-5

A:\Cad\Trenton\Mercer Co\EWLA\1102M026 - ELSA Vehicle Storage Building\Design\1. 1102M026 Drawing.dwg - 12/6/2024 1:31:03 PM

RVE 1901

REMINGTON & VERNICK **ENGINEERS**

2059 SPRINGDALE ROAD
CHERRY HILL, NJ 08003
(856) 795-9595, FAX (856) 795-1882
WEB ADDRESS : RVE.COM
Certification of Authorization: 24 GA 28003300
Excellence • Innovation • Service

Dennis K. Yoder
DATE: 09-03-2024
DENNIS K. YODER
NJ PROFESSIONAL ENGINEER LIC. No. 31866

Jessica D. Hauber
DATE: 09-03-2024
JESSICA D. HAUBER
NJ PROFESSIONAL ENGINEER LIC. No. 51487

PLANS WHICH DO NOT BEAR AN EMBOSSED SEAL ARE NOT VALID.

No.	REVISION	DATE	BY	CHK
3	PER TOWNSHIP CHECKLIST	12/02/24	ACF	DY
2	PER NJDEP COMMENTS	10/30/24	ACF	DY
1	PER ELSA PRE REVIEW	09/09/24	ACF	DY

DEMOLITION PLAN

EWING LAWRANCE SEWAGE AUTHORITY

MINOR SITE PLAN - ELSA VEHICLE STORAGE BUILDING
600 WHITEHEAD ROAD; BLOCK 1202, LOT 2

TOWNSHIP OF LAWRENCE MERCER COUNTY NEW JERSEY

DRAWN BY :	DESIGN BY :	CHECKED BY :	SCALE :
A.C.F.	-	J.D.H.	AS NOTED

DATE : 05/16/2024

JOB No. : 1102M026

SHEET No. : C-6

Z:\Cadd Projects\N\Mercer Co\ELSA\1102M026 - ELSA Vehicle Storage Building\Dwings\1102M026.dwg 12/9/2024 1:31:16 PM

NOTES:
1. ALL EXTERIOR GROUND AREAS WITHIN THE AREA OF DISTURBANCE (EXCEPT THE AREAS SHOWN TO BE SODDED) SHALL BE TOPSOILED AND SEEDED UNLESS OTHERWISE NOTED.

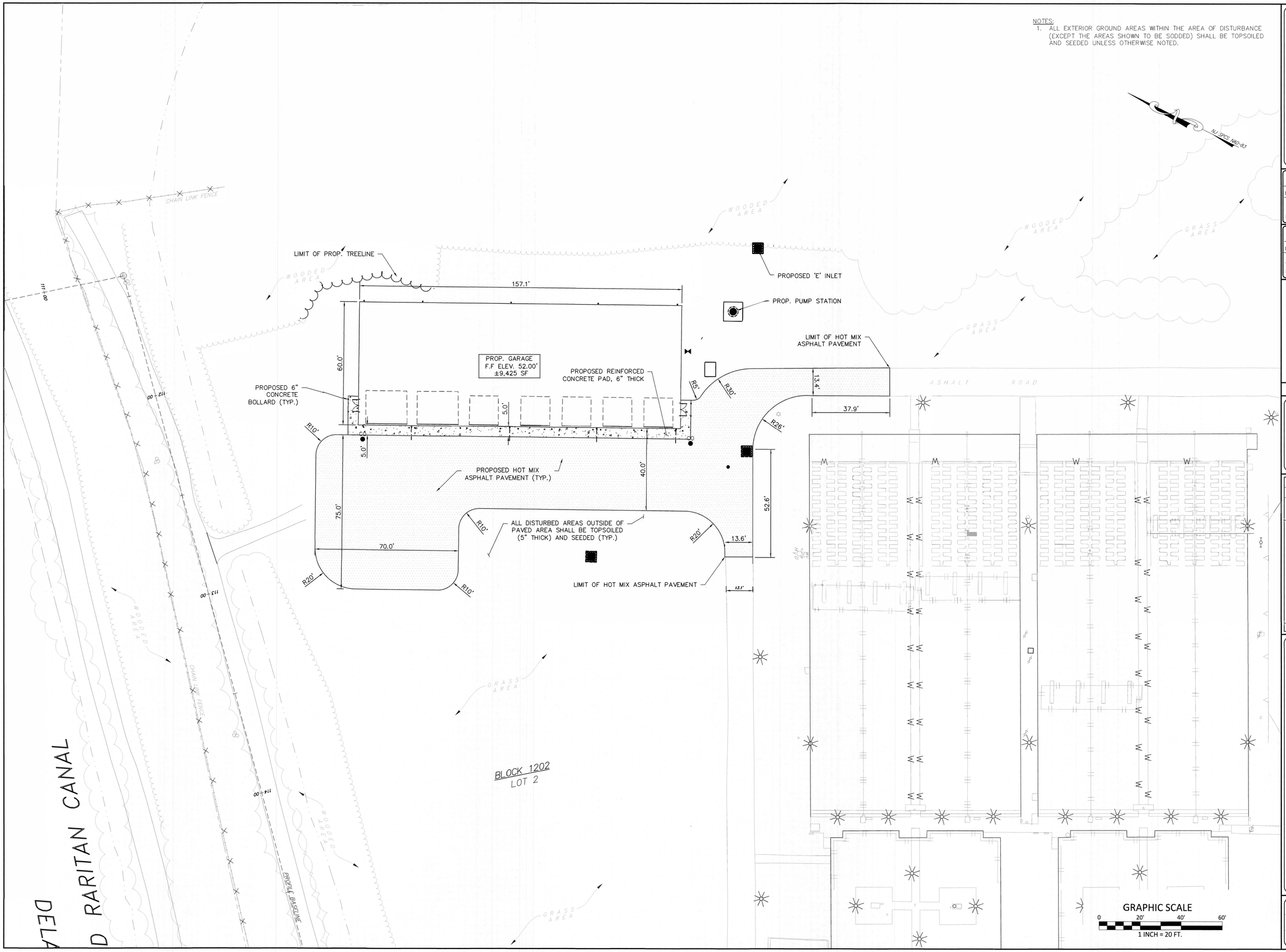

RVE 1901
REMINGTON & VERNICK ENGINEERS
2059 SPRINGDALE ROAD
CHERRY HILL, NJ 08003
(856) 795-9595, FAX (856) 795-1882
WEB ADDRESS : RVE.COM
Certification of Authorization: 24 GA 28003300
Excellence • Innovation • Service

Dennis K. Yoder
DATE: 09-03-2024
DENNIS K. YODER
NJ PROFESSIONAL ENGINEER LIC. No. 31866

Jessica D. Hauber
DATE: 09-03-2024
JESSICA D. HAUBER
NJ PROFESSIONAL ENGINEER LIC. No. 51487

PLANS WHICH DO NOT BEAR AN EMBOSSED SEAL ARE NOT VALID.

No.	REVISION	DATE	BY	CHK
3	PER TOWNSHIP CHECKLIST	12/02/24	ACF	DY
2	PER NJDEP COMMENTS	10/30/24	ACF	DY
1	PER ELSA PRE REVIEW	06/03/24	ACF	DY

SITE PLAN

EWING LAWRANCE SEWAGE AUTHORITY

MINOR SITE PLAN - ELSA VEHICLE STORAGE BUILDING
600 WHITEHEAD ROAD; BLOCK 1202, LOT 2

TOWNSHIP OF LAWRENCE — MERCER COUNTY — NEW JERSEY

DRAWN BY:	DESIGN BY:	CHECKED BY:	SCALE:
A.C.F.	-	J.D.H.	AS NOTED

DATE: 05/16/2024

JOB No.: 1102M026

SHEET No.: C-7

J:\Cadd Projects\N\Mercer Cnty\EwL\1102M026 - ELSA Vehicle Storage Building\Drawings\3. 1102M026 Drawings.dwg, 12/9/2024 1:07:35 PM

FLOOD VENT NOTES:
THE CLARIFICATION FOR FLOOD VENTS IS INDICATED IN PLAN SHEET NO. S-2 ENTITLED 'FOUNDATION & TOP SLAB PLANS', AND SHEET NO. S-3 ENTITLED 'BUILDING FLOOR PLAN'. THE WEST PORTION OF THE BUILDING WILL HAVE 23 VENTS RATED FOR 200 SQUARE FEET OF FLOOD AREA COVERAGE EACH, STRATEGICALLY LOCATED ON ALL THREE OF THE EXTERIOR WALLS. THE EASTERN SIDE OF THE BUILDING WILL HAVE 25 VENTS SIMILARLY RATED AT 200 SQUARE FEET OF FLOOD AREA COVERAGE, STRATEGICALLY LOCATED ON ALL THREE OF ITS EXTERIOR WALLS. AS PER FEMA GUIDANCE, THEY ARE LOCATED ONE-FOOT ABOVE GRADE. THE VENTS ARE TO BE OF THE ENGINEERED TYPE, SUPPLIED BY SMART VENT MANUFACTURERS, AND SPECIFIED TO BE 16" X 8". THE SMART VENT DOOR IS LATCHED UNTIL FLOOD WATER IS PRESENT. RISING FLOOD WATER ACTIVATES INTERNAL FLOATS, WHICH UNLATCH AND OPEN THE VENT DOOR, THUS PREVENTING HYDROSTATIC PRESSURE BUILDUP.
23+25=48 VENTS
48*200=9,600 SF, WHICH EXCEEDS THE 9,425 SF OF THE BUILDING SF

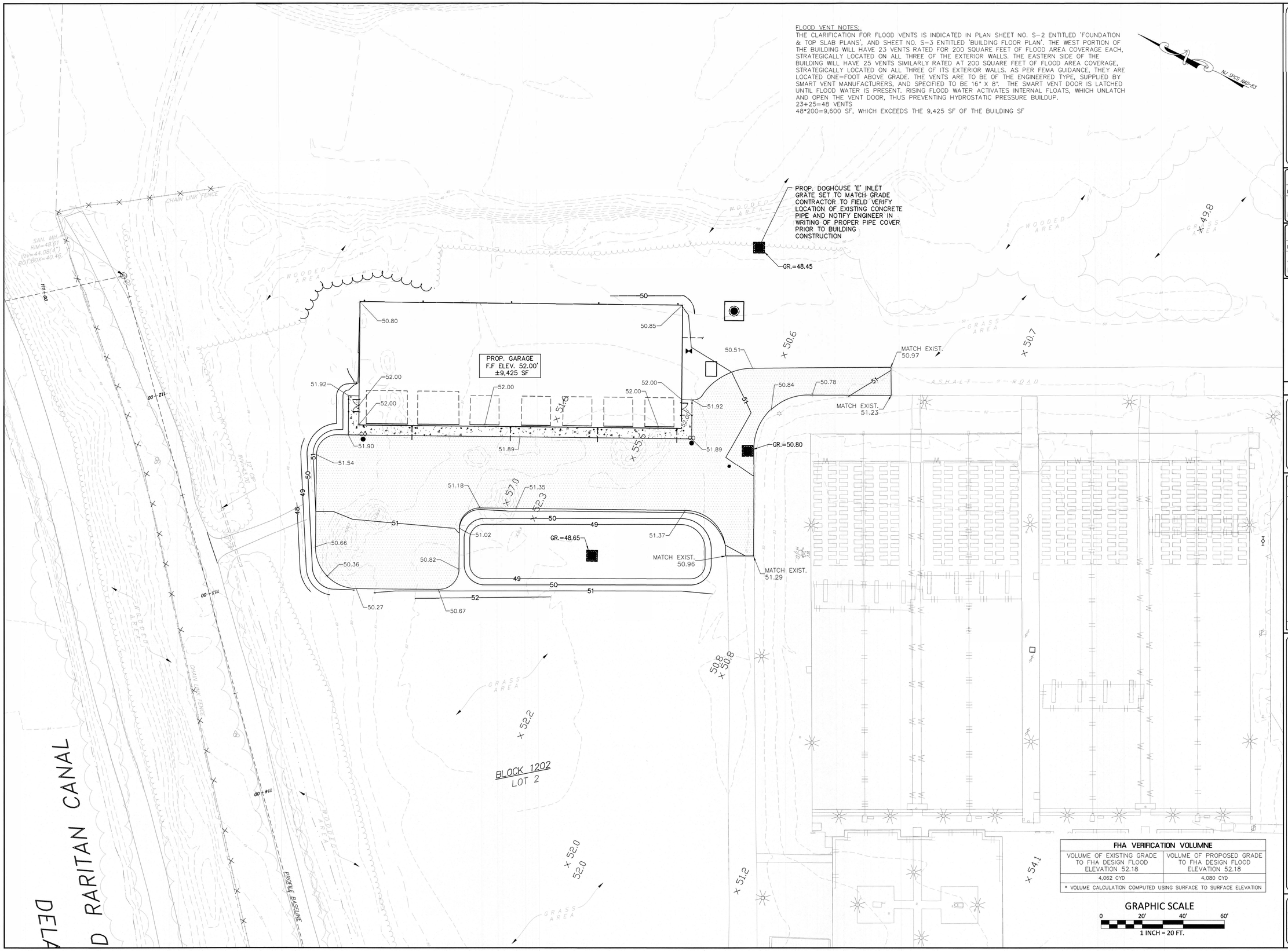

FHA VERIFICATION VOLUMNE	
VOLUME OF EXISTING GRADE TO FHA DESIGN FLOOD ELEVATION 52.18	VOLUME OF PROPOSED GRADE TO FHA DESIGN FLOOD ELEVATION 52.18
4,062 CYD	4,080 CYD
* VOLUME CALCULATION COMPUTED USING SURFACE TO SURFACE ELEVATION	

GRAPHIC SCALE
0 20' 40' 60'
1 INCH = 20 FT.

RVE 1901
REMINGTON & VERNICK ENGINEERS
2059 SPRINGDALE ROAD
CHERRY HILL, NJ 08003
(856) 795-9595, FAX (856) 795-1882
WEB ADDRESS : RVE.COM
Certification of Authorization: 24 GA 28003300
Excellence • Innovation • Service

Dennis K. Yoder
DATE: 09-03-2024
DENNIS K. YODER
NJ PROFESSIONAL ENGINEER LIC. No. 31866

Jessica D. Hauber
DATE: 09-03-2024
JESSICA D. HAUBER
NJ PROFESSIONAL ENGINEER LIC. No. 51487

No.	REVISION	DATE	BY	CHK
4	PER NJDEP COMMENTS	12/09/24	ACF	DY
3	PER TOWNSHIP CHECKLIST	12/02/24	ACF	DY
2	PER NJDEP COMMENTS	10/30/24	ACF	DY
1	PER ELSA PRE REVIEW	08/03/24	ACF	DY

GRADING PLAN

EWING LAWRANCE SEWAGE AUTHORITY

MINOR SITE PLAN - ELSA VEHICLE STORAGE BUILDING
600 WHITEHEAD ROAD; BLOCK 1202, LOT 2

TOWNSHIP OF LAWRENCE MERCER COUNTY NEW JERSEY

DRAWN BY:	DESIGN BY:	CHECKED BY:	SCALE:
A.C.F.	-	J.D.H.	AS NOTED
DATE: 05/16/2024		SHEET No.: C-8	
JOB No.: 1102M026			

J:\Cadd Projects\N\Mercer Cty\ELSA\1102M026 - ELSA Vehicle Storage Building\Dwgs\S3. 1102M026 Drawings\GDU - 1102M026.dwg 12/09/2024 1:01:33 PM

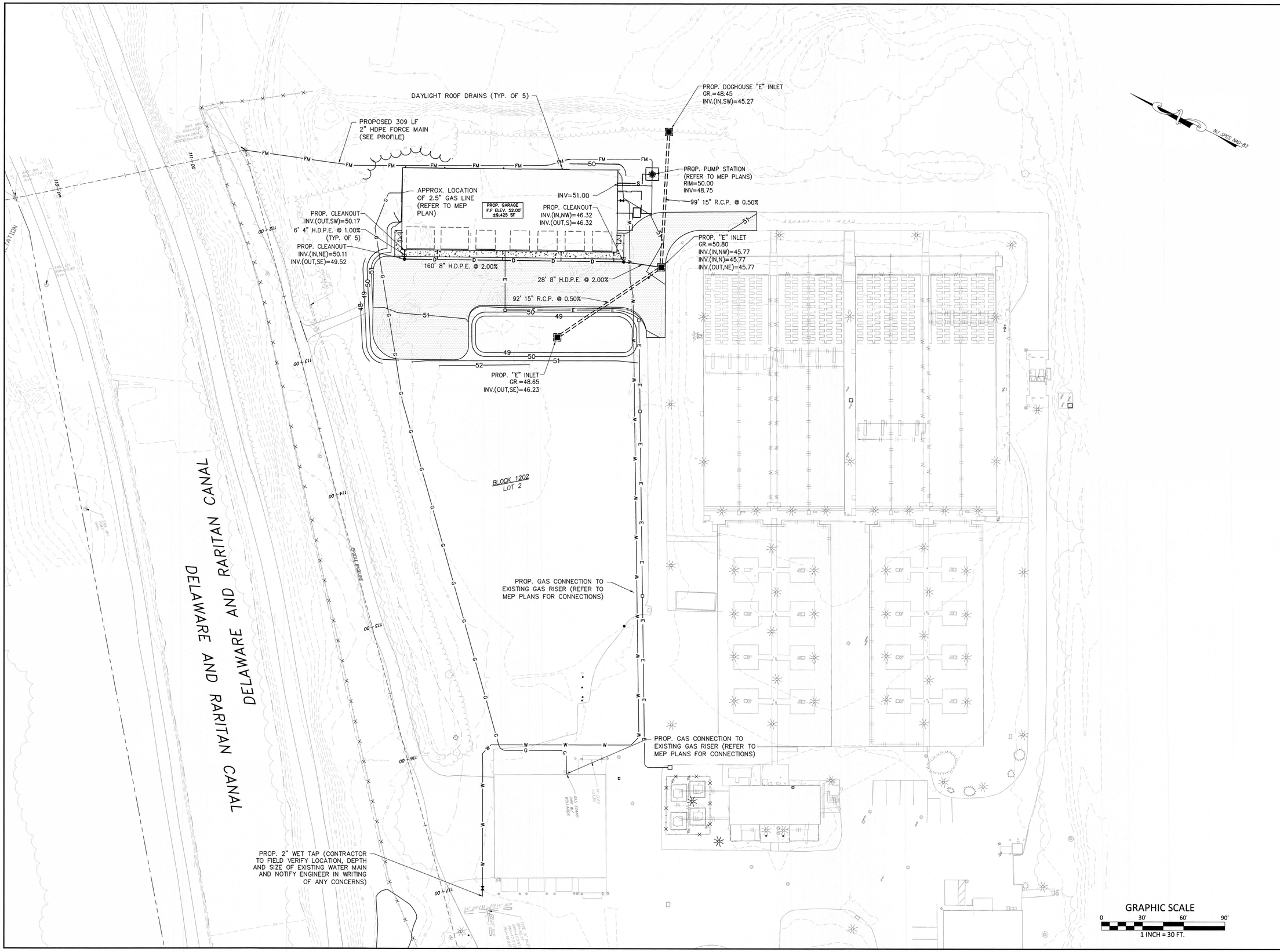

RVE 1901
REMINGTON & VERNICK **ENGINEERS**
2059 SPRINGDALE ROAD
CHERRY HILL, NJ 08003
(856) 795-9595, FAX (856) 795-1882
WEB ADDRESS : RVE.COM
Certification of Authorization: 24 GA 28003300
Excellence • Innovation • Service

DATE: 09-03-2024
DENNIS K. YODER
NJ PROFESSIONAL ENGINEER LIC. No. 31866

DATE: 09-03-2024
JESSICA D. HAUBER
NJ PROFESSIONAL ENGINEER LIC. No. 51487

PLANS WHICH DO NOT BEAR AN EMBOSSED SEAL ARE NOT VALID.

No.	REVISION	DATE	BY	CHK
3	PER TOWNSHIP CHECKLIST	12/30/24	ACF	DY
2	PER MRSP COMMENTS	10/30/24	ACF	DY
1	PER ELSA PRE REVIEW	08/08/24	ACF	DY

DRAINAGE & UTILITIES PLAN

EWING LAWRANCE SEWAGE AUTHORITY

MINOR SITE PLAN - ELSA VEHICLE STORAGE BUILDING
600 WHITEHEAD ROAD; BLOCK 1202, LOT 2

TOWNSHIP OF LAWRENCE MERCER COUNTY NEW JERSEY

DRAWN BY :	DESIGN BY :	CHECKED BY :	SCALE :
A.C.F.	-	J.D.H.	AS NOTED
DATE : 05/16/2024		SHEET No. : C-9	
JOB No. : 1102M026			

Z:\Cad Projects\Mercer Co\ELSA\1102M026 - ELSA Vehicle Storage Building\Design\1102M026 Drainage\C9.dwg - 1102M026 Drainage\C9.dwg - 12/30/2024 1:51:09 PM

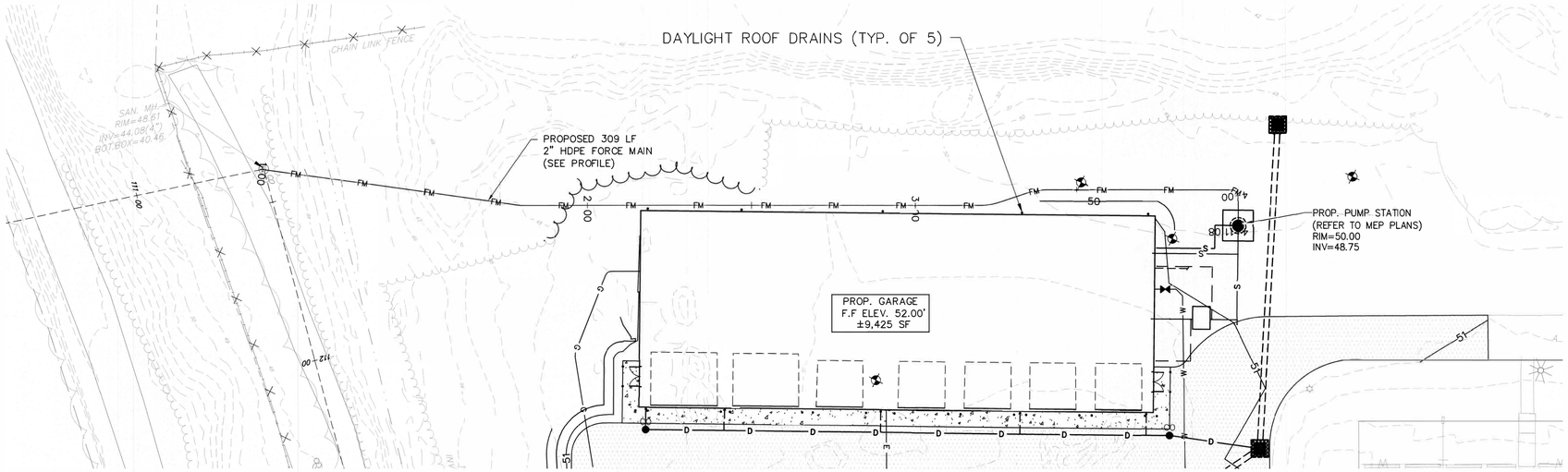

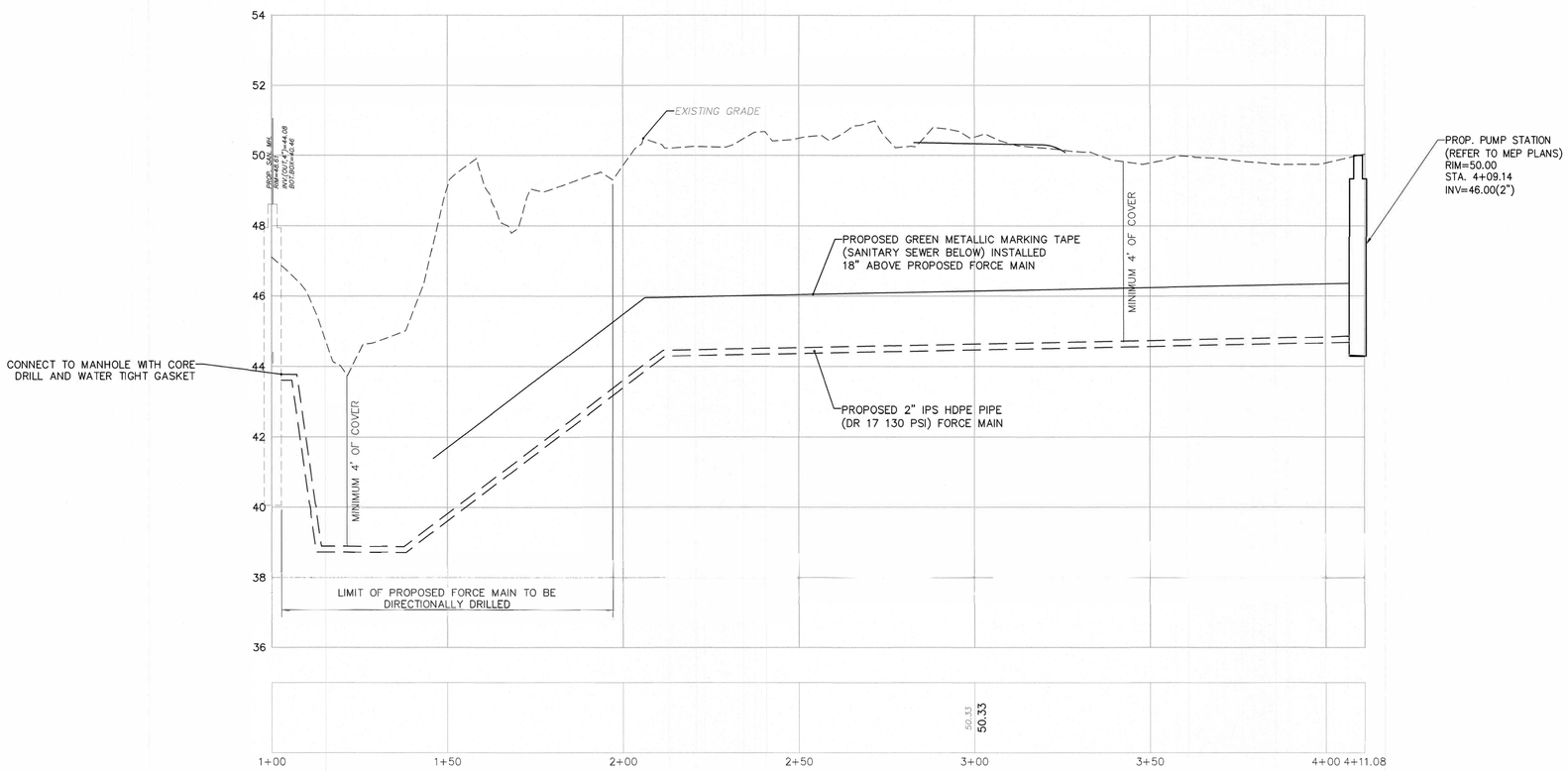

FORCE MAIN PROFILE

1"=3' VERTICAL
1"=30' HORIZONTAL

GRAPHIC SCALE

0 30' 60' 90'

1 INCH = 30 FT.

RVE 1901
REMINGTON & VERNICK ENGINEERS
2059 SPRINGDALE ROAD
CHERRY HILL, NJ 08003
(856) 795-9595, FAX (856) 795-1882
WEB ADDRESS : RVE.COM
Certification of Authorization: 24 GA 28003300
Excellence • Innovation • Service

Dennis K. Yoder
DATE: 09-03-2024
DENNIS K. YODER
NJ PROFESSIONAL ENGINEER LIC. No. 31866

Jessica D. Hauber
DATE: 09-03-2024
JESSICA D. HAUBER
NJ PROFESSIONAL ENGINEER LIC. No. 51487

No.	REVISION	DATE	BY	CHK
3	PER TOWNSHIP CHECKLIST	12/02/24	ACF	DY
2	PER NJDEP COMMENTS	10/30/24	ACF	DY
1	PER ELSA PRE REVIEW	06/03/24	ACF	DY

FORCE MAIN PROFILE

EWING LAWRANCE SEWAGE AUTHORITY

MINOR SITE PLAN - ELSA VEHICLE STORAGE BUILDING
600 WHITEHEAD ROAD; BLOCK 1202, LOT 2

TOWNSHIP OF LAWRENCE MERCER COUNTY NEW JERSEY

DRAWN BY:	DESIGN BY:	CHECKED BY:	SCALE:
A.C.F.	-	J.D.H.	AS NOTED

DATE: 05/16/2024

JOB No.: 1102M026

SHEET No.: C-10

J:\Closed Projects\Mercer Cnty\ELSA\1102M026 - ELSA Vehicle Storage Building\Design\1. 1102M026.dwg 12/02/24 1:02:10 PM

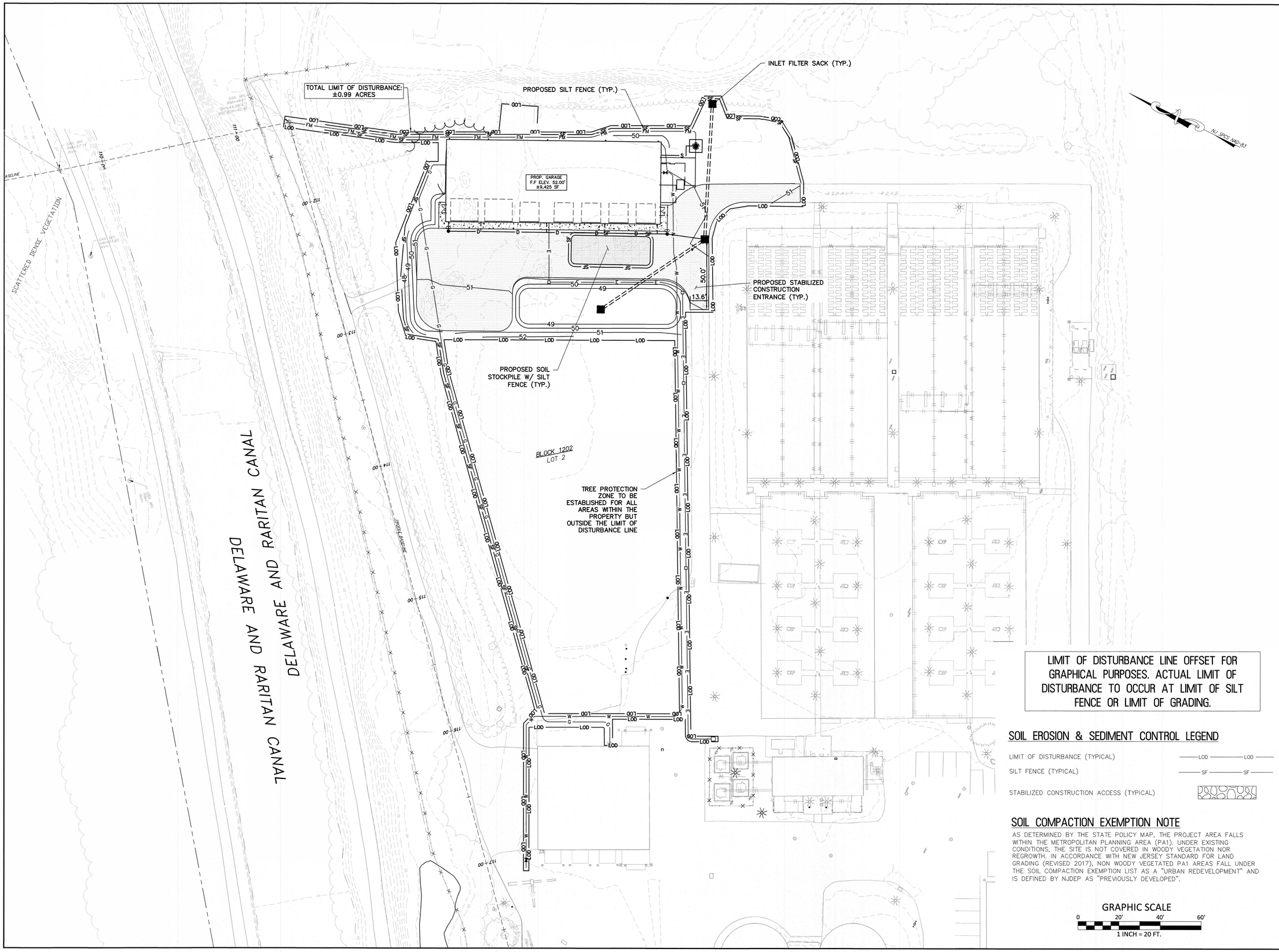

LIMIT OF DISTURBANCE LINE OFFSET FOR GRAPHICAL PURPOSES. ACTUAL LIMIT OF DISTURBANCE TO OCCUR AT LIMIT OF SILT FENCE OR LIMIT OF GRADING.

SOIL EROSION & SEDIMENT CONTROL LEGEND

LIMIT OF DISTURBANCE (TYPICAL) —— LOD —— LOD ——

SILT FENCE (TYPICAL) —— SF —— SF ——

STABILIZED CONSTRUCTION ACCESS (TYPICAL)

SOIL COMPACTION EXEMPTION NOTE

AS DETERMINED BY THE STATE POLICY MAP, THE PROJECT AREA FALLS WITHIN THE METROPOLITAN PLANNING AREA (PA1). UNDER EXISTING CONDITIONS, THE SITE IS NOT COVERED IN WOODY VEGETATION NOR REGROWTH. IN ACCORDANCE WITH NEW JERSEY STANDARD FOR LAND GRADING (REVISED 2017), NON WOODY VEGETATED PA1 AREAS FALL UNDER THE SOIL COMPACTION EXEMPTION LIST AS A "URBAN REDEVELOPMENT" AND IS DEFINED BY NJDEP AS "PREVIOUSLY DEVELOPED".

GRAPHIC SCALE

0 20' 40' 60'

1 INCH = 20 FT.

RVE 1901

REMINGTON & VERNICK **ENGINEERS**

2059 SPRINGDALE ROAD
CHERRY HILL, NJ 08003
(856) 795-9595, FAX (856) 795-1882
WEB ADDRESS : RVE.COM
Certification of Authorization: 24 GA 28003300
Excellence • Innovation • Service

Dennis K. Yoder
DATE: 09-03-2024
DENNIS K. YODER
NJ PROFESSIONAL ENGINEER LIC. No. 31866

Jessica D. Hauber
DATE: 09-03-2024
JESSICA D. HAUBER
NJ PROFESSIONAL ENGINEER LIC. No. 51487

No.	REVISION	DATE	BY	CHK
3	PER TOWNSHIP CHECKLIST	12/02/24	ACF	DY
2	PER NJDEP COMMENTS	10/30/24	ACF	DY
1	PER ELSA PRE REVIEW	06/03/24	ACF	DY

SOIL EROSION & SEDIMENT CONTROL PLAN

EWING LAWRANCE SEWAGE AUTHORITY

MINOR SITE PLAN - ELSA VEHICLE STORAGE BUILDING
600 WHITEHEAD ROAD; BLOCK 1202, LOT 2

TOWNSHIP OF LAWRENCE MERCER COUNTY NEW JERSEY

DRAWN BY:	DESIGN BY:	CHECKED BY:	SCALE:
A.C.F.	-	J.D.H.	AS NOTED

DATE: 05/16/2024

JOB No.: 1102M026

SHEET No.: C-11

J:\Cad Projects\Mercer Cnty\ELSA\1102M026 - ELSA Vehicle Storage Building\Drawings\C04 - 1102M026.dwg 12/02/2024 1:02:17 PM

SOIL EROSION AND SEDIMENT CONTROL NOTES

1. ALL APPLICABLE EROSION AND SEDIMENT CONTROL PRACTICES SHALL BE IN PLACE PRIOR TO ANY GRADING OPERATION AND/OR INSTALLATION OF PROPOSED STRUCTURES OR UTILITIES.
2. SOIL EROSION AND SEDIMENT CONTROL PRACTICES ON THIS PLAN SHALL BE CONSTRUCTED IN ACCORDANCE WITH THE STANDARDS FOR SOIL EROSION AND SEDIMENT CONTROL IN NEW JERSEY.
3. APPLICABLE EROSION AND SEDIMENT CONTROL PRACTICES SHALL BE LEFT IN PLACE UNTIL CONSTRUCTION IS COMPLETED AND/OR THE AREA IS STABILIZED.
4. THE CONTRACTOR SHALL PERFORM ALL WORK, FURNISH ALL MATERIALS AND INSTALL ALL MEASURES REQUIRED TO REASONABLY CONTROL SOIL EROSION RESULTING FROM CONSTRUCTION OPERATIONS AND PREVENT EXCESSIVE FLOW OF SEDIMENT FROM THE CONSTRUCTION SITE.
5. ANY DISTURBED AREA THAT IS TO BE LEFT EXPOSED FOR MORE THAN THIRTY (30) DAYS AND NOT SUBJECT TO CONSTRUCTION TRAFFIC SHALL IMMEDIATELY RECEIVE A TEMPORARY SEEDING AND FERTILIZATION IN ACCORDANCE WITH THE NEW JERSEY STANDARDS AND THEIR RATES SHOULD BE INCLUDED IN THE NARRATIVE. IF THE SEASON PROHIBITS TEMPORARY SEEDING, THE DISTURBED AREAS WILL BE MULCHED WITH SALT HAY OR EQUIVALENT AND ANCHORED IN ACCORDANCE WITH THE NEW JERSEY STANDARDS (I.E. PEG AND TWINE, MULCH NETTING OR LIQUID MULCH BINDER).
6. IT SHALL BE THE RESPONSIBILITY OF THE DEVELOPER TO PROVIDE CONFIRMATION OF LIME, FERTILIZER AND SEED APPLICATION AND RATES OF APPLICATION AT THE REQUEST OF THE CAMDEN COUNTY SOIL CONSERVATION DISTRICT.
7. ALL CRITICAL AREAS SUBJECT TO EROSION WILL RECEIVE A TEMPORARY SEEDING IN COMBINATION WITH STRAW MULCH AT A RATE OF 2 TONS PER ACRE, ACCORDING TO THE NEW JERSEY STANDARDS IMMEDIATELY FOLLOWING ROUGH GRADING.
8. THE SITE SHALL AT ALL TIMES BE GRADED AND MAINTAINED SUCH THAT ALL STORMWATER RUNOFF IS DIVERTED TO SOIL EROSION AND SEDIMENT CONTROL FACILITIES.
9. ALL SEDIMENTATION STRUCTURES WILL BE INSPECTED AND MAINTAINED ON A REGULAR BASIS AND AFTER EVERY STORM EVENT.
10. A CRUSHED STONE, TIRE CLEANING PAD WILL BE INSTALLED WHEREVER A CONSTRUCTION ACCESS EXISTS. THE STABILIZED PAD WILL BE INSTALLED ACCORDING TO THE STANDARD FOR STABILIZED CONSTRUCTION ACCESS
11. ALL DRIVEWAYS MUST BE STABILIZED WITH 2 ½"CRUSHED STONE OR SUBBASE PRIOR TO INDIVIDUAL LOT CONSTRUCTION.
12. PAVED ROADWAYS MUST BE KEPT CLEAN AT ALL TIMES.
13. ALL CATCH BASIN INLETS WILL BE PROTECTED ACCORDING TO THE CERTIFIED PLAN.
14. ALL STORM DRAINAGE OUTLETS WILL BE STABILIZED, AS REQUIRED, BEFORE THE DISCHARGE POINTS BECOME OPERATIONAL.
15. ALL DEWATERING OPERATIONS MUST DISCHARGE DIRECTLY INTO A SEDIMENT FILTER AREA. THE SEDIMENT FILTER SHOULD BE COMPOSED OF A SUITABLE SEDIMENT FILTER FABRIC. (SEE DETAIL) THE BASIN MUST BE DEWATERED TO NORMAL POOL WITHIN 10 DAYS OF THE DESIGN STORM.
16. NJSA 4:24-39, ET SEQ. REQUIRES THAT NO CERTIFICATE OF OCCUPANCY BE ISSUED BEFORE ALL PROVISIONS OF THE CERTIFIED SOIL EROSION AND SEDIMENT CONTROL PLAN HAVE BEEN COMPLIED WITH FOR PERMANENT MEASURES. ALL SITE WORK FOR THE PROJECT MUST BE COMPLETED PRIOR TO THE DISTRICT ISSUING A REPORT OF COMPLIANCE AS A PREREQUISITE TO THE ISSUANCE OF A CERTIFICATE OF OCCUPANCY BY THE MUNICIPALITY.
17. MULCHING IS REQUIRED ON ALL SEEDED AREAS TO INSURE AGAINST EROSION BEFORE GRASS IS ESTABLISHED TO PROMOTE EARLIER VEGETATION COVER.
18. OFFSITE SEDIMENT DISTURBANCE MAY REQUIRE ADDITIONAL CONTROL MEASURES TO BE DETERMINED BY THE EROSION CONTROL INSPECTOR.
19. A COPY OF THE CERTIFIED SOIL EROSION AND SEDIMENT CONTROL PLAN MUST BE MAINTAINED ON THE PROJECT SITE DURING CONSTRUCTION.
20. THE CAMDEN COUNTY SOIL CONSERVATION DISTRICT SHALL BE NOTIFIED 72 HOURS PRIOR TO ANY LAND DISTURBANCE.
21. ANY CONVEYANCE OF THIS PROJECT PRIOR TO ITS COMPLETION WILL TRANSFER FULL RESPONSIBILITY FOR COMPLIANCE WITH THE CERTIFIED PLAN TO ANY SUBSEQUENT OWNERS.
22. IMMEDIATELY AFTER THE COMPLETION OF STRIPPING AND STOCKPILING OF TOPSOIL, THE STOCKPILE MUST BE STABILIZED ACCORDING TO THE STANDARD FOR TEMPORARY VEGETATIVE COVER. STABILIZE TOPSOIL PILE WITH STRAW MULCH FOR PROTECTION IF THE SEASON DOES NOT PERMIT THE APPLICATION AND ESTABLISHMENT OF TEMPORARY SEEDING. ALL SOIL STOCKPILES ARE NOT TO BE LOCATED WITHIN FIFTY (50) FEET OF A FLOODPLAIN, SLOPE, ROADWAY OR DRAINAGE FACILITY AND THE BASE MUST BE PROTECTED WITH A SEDIMENT BARRIER.
23. ANY CHANGES TO THE SITE PLAN WILL REQUIRE THE SUBMISSION OF A REVISED SOIL EROSION AND SEDIMENT CONTROL PLAN TO THE CAMDEN COUNTY SOIL CONSERVATION DISTRICT. THE REVISED PLAN MUST BE IN ACCORDANCE WITH THE CURRENT NEW JERSEY STANDARDS FOR SOIL EROSION AND SEDIMENT CONTROL.
24. METHODS FOR THE MANAGEMENT OF HIGH ACID PRODUCING SOILS SHALL BE IN ACCORDANCE WITH THE STANDARDS. HIGH ACID PRODUCING SOILS ARE THOSE FOUND TO CONTAIN IRON SULFIDES OR HAVE A pH OF 4 OR LESS.
25. TEMPORARY AND PERMANENT SEEDING MEASURES MUST BE APPLIED ACCORDING TO THE NEW JERSEY STANDARDS, AND MULCHED WITH SALT HAY OR EQUIVALENT AND ANCHORED IN ACCORDANCE WITH THE NEW JERSEY STANDARDS (I.E. PEG AND TWINE, MULCH NETTING OR LIQUID MULCH BINDER).
26. MAXIMUM SIDE SLOPES OF ALL EXPOSED SURFACES SHALL NOT BE CONSTRUCTED STEEPER THAN 3:1 UNLESS OTHERWISE APPROVED BY THE DISTRICT.
27. DUST IS TO BE CONTROLLED BY AN APPROVED METHOD ACCORDING TO THE NEW JERSEY STANDARDS AND MAY INCLUDE WATERING WITH A SOLUTION OF CALCIUM CHLORIDE AND WATER.
28. ADJOINING PROPERTIES SHALL BE PROTECTED FROM EXCAVATION AND FILLING OPERATIONS ON THE PROPOSED SITE.
29. USE STAGED CONSTRUCTION METHODS TO MINIMIZE EXPOSED SURFACES, WHERE APPLICABLE.
30. ALL VEGETATIVE MATERIAL SHALL BE SELECTED IN ACCORDANCE WITH AMERICAN STANDARDS FOR NURSERY STOCK OF THE AMERICAN ASSOCIATION OF THE NURSERYMEN AND IN ACCORDANCE WITH THE NEW JERSEY STANDARDS.
31. NATURAL VEGETATION AND SPECIES SHALL BE RETAINED WHERE SPECIFIED ON THE LANDSCAPE PLAN.
32. THE SOIL EROSION INSPECTOR MAY REQUIRE ADDITIONAL SOIL EROSION MEASURES TO BE INSTALLED, AS DIRECTED BY THE DISTRICT INSPECTOR.

TEMPORARY VEGETATIVE COVER FOR SOIL STABILIZATION

1. SITE PREPARATION
   - 1.1. GRADE AS NEEDED AND FEASIBLE TO PERMIT THE USE OF CONVENTIONAL EQUIPMENT FOR SEEDBED PREPARATION, SEEDING, MULCH APPLICATION, AND MULCH ANCHORING.
   - 1.2. INSTALL NEEDED EROSION CONTROL PRACTICES OR FACILITIES SUCH AS DIVERSIONS, GRADE STABILIZATION STRUCTURES, CHANNEL STABILIZATION MEASURES, SEDIMENT BASINS, AND WATERWAYS.
2. SEEDBED PREPARATION
   - 2.1. APPLY LIMESTONE AND FERTILIZER. FERTILIZER SHALL BE APPLIED AT THE RATE OF 500 POUNDS PER ACRE OR 11 POUNDS PER 1,000 SQUARE FEET OF 10-20-10 OR EQUIVALENT. APPLY LIMESTONE (EQUIVALENT TO 50% CALCIUM PLUS MAGNESIUM OXIDES) AS FOLLOWS:

SOIL TEXTURE	TONS/ACRE	LBS./1000 SQ. FT.
CLAY, CLAY LOAM, AND HIGH ORGANIC SOIL	3	135
SANDY LOAM, LOAM, SILT LOAM	2	90
LOAMY SAND, SAND	1	45

PULVERIZED DOLOMITIC LIMESTONE IS PREFERRED FOR MOST SOILS SOUTH OF THE NEW BRUNSWICK-TRENTON LINE.

   - 2.2. WORK LIME AND FERTILIZER INTO THE SOIL AS NEARLY AS PRACTICAL TO A DEPTH OF 4 INCHES WITH A DISC, SPRINGTOOTH HARROW, OR OTHER SUITABLE EQUIPMENT. THE FINAL HARROWING OR DISCING OPERATION SHOULD BE ON THE GENERAL CONTOUR. CONTINUE TILLAGE UNTIL A REASONABLY UNIFORM SEEDBED IS PREPARED.
   - 2.3. INSPECT SEEDBED JUST BEFORE SEEDING. IF TRAFFIC HAS LEFT THE SOIL COMPACTED, THE AREA MUST BE RETILLED AS ABOVE.
   - 2.4. SOILS HIGH ON SULFIDES OR HAVING A pH OF 4 OR LESS SHOULD BE MULCHED ONLY.
3. SEEDING
   - 3.1. SEE TEMPORARY SEED MIXTURE FOR SPECIES AND APPLICATION RATES.
   - 3.2. APPLY SEED UNIFORMLY BY HAND, CYCLONE(CENTRIFUGAL) SEEDER, DROP SEEDER, DRILL, CULTIPACKER SEEDER, OR HYDROSEEDER. MULCH SHALL NOT BE INCLUDED IN A HYDRO-SEEDER TANK WITH SEED. SEED SHALL BE INCORPORATED INTO THE SOIL BY RAKING OR DRAGGING. DEPTH OF SEED PLACEMENT MAY BE 1/4 INCH DEEPER ON COURSE TEXTURED SOIL.
   - 3.3. AFTER SEEDING, FIRMING THE SOIL SHALL BE PERFORMED WITH A CORRUGATED ROLLER WILL ASSURE GOOD SEED-TO-SOIL CONTACT, RESTORE CAPILLARITY, AND IMPROVE SEEDING EMERGENCE.
4. MULCHING – MULCHING IS REQUIRED ON ALL SEEDING.
   - 4.1. MULCH MATERIALS SHOULD BE UNROTTED SMALL GRAIN STRAW, HAY FREE OF SEEDS, OR SALT HAY TO BE APPLIED AT THE RATE OF 1-1/2 TO 2 TONS PER ACRE (70 TO 90 POUNDS PER 1,000 SQUARE FEET), EXCEPT THAT WHERE A CRIMPER IS USED INSTEAD OF A LIQUID MULCH-BINDER (TACKIFYING OR ADHESIVE AGENT), THE RATE OF APPLICATION MUST BE DOUBLE THE LOWER RATE. MULCH CHOPPER-BLOWERS MUST NOT GRIND THE MATERIAL.
   - 4.2. SPREAD UNIFORMLY BY HAND OR MECHANICALLY SO THAT APPROXIMATELY 75% TO 95% OF THE SOIL SURFACE WILL BE COVERED. FOR UNIFORM DISTRIBUTION OF HAND-SPREAD MULCH, DIVIDE AREA INTO APPROXIMATELY 1,000 SQUARE FEET SECTIONS AND DISTRIBUTE 70 TO 90 POUNDS WITHIN EACH SECTION.
   - 4.3. MULCH ANCHORING SHOULD BE ACCOMPLISHED IMMEDIATELY AFTER PLACEMENT TO MINIMIZE LOSS BY WIND OR WATER. THIS MAY BE DONE BY ONE OF THE FOLLOWING METHODS, DEPENDING UPON THE SIZE OF THE AREA, STEEPNESS OF SLOPES, AND COSTS.
     - 4.3.1. PEG AND TWINE- DRIVE 8 TO 10 INCH WOODEN PEGS TO WITHIN 2 TO 3 INCHES OF THE SOIL SURFACE EVERY 4 FEET IN ALL DIRECTIONS. STAKES MAY BE DRIVEN BEFORE OR AFTER APPLYING MULCH. SECURE MULCH TO SOIL SURFACE BY STRETCHING TWINE BETWEEN PEGS IN A CRISSCROSS AND A SQUARE PATTERN. SECURE TWINE AROUND EACH PEG WITH TWO OR MORE ROUND TURNS.
     - 4.3.2. MULCH NETTING- STAPLE PAPER, JUTE, COTTON, OR PLASTIC NETTING TO THE SOIL SURFACE. USE A DEGRADABLE NETTING IN AREAS TO BE MOWED.
     - 4.3.3. CRIMPER(MULCH ANCHORING TOOL)- A TRACTOR-DRAWN IMPLEMENT, SOMEWHAT LIKE A DISC HARROW, ESPECIALLY DESIGNED TO PUSH OR CUT SOME OF THE BROADCAST LONG FIBER MULCH 3 TO 4 INCHES INTO THE SOIL SO AS TO ANCHOR IT AND LEAVE PART STANDING UPRIGHT. THIS TECHNIQUE IS LIMITED TO AREAS TRAVERSABLE BY A TRACTOR, WHICH MUST OPERATE ON THE CONTOUR OF SLOPES. STRAW MULCH RATE MUST BE 3 TONS PER ACRE. NO TACKIFYING OR ADHESIVE AGENT IS REQUIRED.
   - 4.4. WOOD-FIBER OR PAPER-FIBER MULCH AT THE RATE OF 1,500 POUNDS PER ACRE MAY BE APPLIED BY A HYDROSEEDER. USE IS LIMITED TO FLATTER SLOPES AND DURING OPTIMUM SEEDING PERIODS IN SPRING AND FALL.

THIS SEEDING MIXTURE IS COMPOSED OF A SINGLE SPECIES WHICH GERMINATES QUICKLY IN ORDER TO REDUCE SOIL EROSION UNTIL A PERMANENT VEGETATIVE COVER CAN BE COVER ESTABLISHED. A MIXTURE OF EQUAL QUALITY MAY BE SUBSTITUTED IF APPROVED BY OUR OFFICE.

%	COMMON NAME	BOTANICAL NAME
100%	PERENNIAL RYEGRASS	LOLIUM PERENNE

THE MINIMUM APPLICATION RATE FOR THIS SEEDING MIXTURE SHALL BE FOUR (4) POUNDS/1000 SQUARE FEET OR 160 POUNDS/ACRE.

THE OPTIMAL SEEDING DATES FOR PERRENNIAL RYEGRASS FOR CAMDEN COUNTY REGION ARE 2/15 – 4/30 AND 8/15 – 10/30. SUMMER SEEDING SHALL BE PERFORMED ONLY IF ADEQUATE IRRIGATION IS PROVIDED TO ENSURE SUCCESSFUL GERMINATION.

PERMANENT VEGETATIVE COVER FOR SOIL STABILIZATION

1. SITE PREPARATION
   - 1.1. GRADE AS NEEDED AND FEASIBLE TO PERMIT THE USE OF CONVENTIONAL EQUIPMENT FOR SEEDBED PREPARATION, SEEDING, MULCH APPLICATION, MULCH ANCHORING, AND MAINTENANCE.
   - 1.2. EVALUATE SUBSOIL FOR COMPACTION ACCORDING TO SOIL COMPACTION TESTING REQUIREMENTS AS DESCRIBED ON THIS PLAN SHEET.
   - 1.3. TOPSOIL SHOULD BE HANDLED ONLY WHEN IT IS DRY ENOUGH TO WORK WITHOUT DAMAGING THE SOIL STRUCTURE. A UNIFORM APPLICATION TO A DEPTH OF 5 INCHES (UNSETTLED) IS REQUIRED ON ALL SITES. TOPSOIL SHALL BE AMENDED WITH ORGANIC MATTER, AS NEEDED, IN ACCORDANCE WITH TOPSOILING REQUIREMENTS AS DESCRIBED ON THIS PLAN SHEET.
   - 1.4. INSTALL NEEDED EROSION CONTROL PRACTICES OR FACILITIES SUCH AS DIVERSIONS, GRADE STABILIZATION STRUCTURES, CHANNEL STABILIZATION MEASURES, SEDIMENT BASINS, AND WATERWAYS.
2. SEEDBED PREPARATION
   - 2.1. APPLY GROUND LIMESTONE AND FERTILIZER. FERTILIZER SHALL BE APPLIED AT THE RATE OF 500 POUNDS PER ACRE OR 11 POUNDS PER 1,000 SQUARE FEET OF 10-10-10 OR EQUIVALENT WITH 50% WATER INSOLUBLE NITROGEN, UNLESS A SOIL TEST INDICATES OTHERWISE, AND INCORPORATED INTO THE SURFACE 4 INCHES. APPLY LIMESTONE (EQUIVALENT TO 50% CALCIUM PLUS MAGNESIUM OXIDES) AS FOLLOWS:

SOIL TEXTURE	TONS/ACRE	LBS./1000 SQ. FT.
CLAY, CLAY LOAM, AND HIGH ORGANIC SOIL	4	180
SANDY LOAM, LOAM, SILT LOAM	3	135
LOAMY SAND, SAND	2	90

PULVERIZED DOLOMITIC LIMESTONE IS PREFERRED FOR MOST SOILS SOUTH OF THE NEW BRUNSWICK-TRENTON LINE.

   - 2.2. WORK LIME AND FERTILIZER INTO THE SOIL AS NEARLY AS PRACTICAL TO A DEPTH OF 4 INCHES WITH A DISC, SPRING TOOTH HARROW, OR OTHER SUITABLE EQUIPMENT. THE FINAL HARROWING OR DISKING OPERATION SHOULD BE ON THE GENERAL CONTOUR. CONTINUE TILLAGE UNTIL A REASONABLY UNIFORM SEEDBED IS PREPARED. ALL BUT CLAY OR SILTY SOILS AND COURSE SANDS SHOULD BE ROLLED TO FIRM THE SEEDBED WHEREVER FEASIBLE.
   - 2.3. REMOVE FROM THE SURFACE ALL STONES TWO INCHES OR LARGER IN ANY DIMENSION. REMOVE ALL OTHER DEBRIS, SUCH AS WIRE, CABLE, TREE ROOTS, PIECES OF CONCRETE, CLODS, LUMPS, OR OTHER UNSUITABLE MATERIAL.
   - 2.4. INSPECT SEEDBED JUST BEFORE SEEDING. IF TRAFFIC HAS LEFT THE SOIL COMPACTED, THE AREA MUST BE RETILLED AND FIRMED AS ABOVE.
3. SEEDING
   - 3.1. SEE PERMANENT SEED MIXTURE FOR SPECIES AND APPLICATION RATES.
   - 3.2. APPLY SEED UNIFORMLY BY HAND, CYCLONE(CENTRIFUGAL) SEEDER, DROP SEEDER, DRILL, CULTIPACKER SEEDER, OR HYDROSEEDER. MULCH SHALL NOT BE INCLUDED IN A HYDRO-SEEDER TANK WITH SEED. EXCEPT FOR DRILLED, HYDROSEEDED OR CULTIPACKED SEEDING, SEED SHALL BE INCORPORATED INTO THE SOIL WITHIN 24 HOURS OF SEEDBED PREPARATION TO A DEPTH OF 1/4 TO 1/2 INCH, BY RAKING OR DRAGGING. DEPTH OF SEED PLACEMENT MAY BE 1/4 INCH DEEPER ON COURSE TEXTURED SOIL.
   - 3.3. AFTER SEEDING, FIRMING THE SOIL SHALL BE PERFORMED WITH A CORRUGATED ROLLER TO ASSURE GOOD SEED-TO-SOIL CONTACT, RESTORE CAPILLARITY, AND IMPROVE SEEDING EMERGENCE.
4. MULCHING – MULCHING IS REQUIRED ON ALL SEEDING.
   - 4.1. STRAW OR HAY. MULCH MATERIALS SHOULD BE UNROTTED SMALL GRAIN STRAW, HAY FREE OF SEEDS, OR SALT HAY, AND SHALL BE APPLIED AT THE RATE OF 1-1/2 TO 2 TONS PER ACRE (70 TO 90 POUNDS PER 1,000 SQUARE FEET), EXCEPT THAT WHERE A CRIMPER IS USED INSTEAD OF A LIQUID MULCH-BINDER (TACKIFYING OR ADHESIVE AGENT), THE RATE OF APPLICATION MUST BE 3 TONS PER ACRE (70 POUNDS PER 1,000 SQUARE FEET). MULCH CHOPPER-BLOWERS MUST NOT GRIND THE MATERIAL.
   - 4.2. SPREAD UNIFORMLY BY HAND OR MECHANICALLY SO THAT AT LEAST 85% OF THE SOIL SURFACE WILL BE COVERED. FOR UNIFORM DISTRIBUTION OF HAND-SPREAD MULCH, DIVIDE AREA INTO APPROXIMATELY 1,000 SQUARE FEET SECTIONS AND DISTRIBUTE 70 TO 90 POUNDS WITHIN EACH SECTION.
   - 4.3. MULCH ANCHORING SHOULD BE ACCOMPLISHED IMMEDIATELY AFTER PLACEMENT TO MINIMIZE LOSS BY WIND OR WATER. THIS MAY BE DONE BY ONE OF THE FOLLOWING METHODS, DEPENDING UPON THE SIZE OF THE AREA, STEEPNESS OF SLOPES, AND COSTS.
     - 4.3.1. PEG AND TWINE- DRIVE 8 TO 10 INCH WOODEN PEGS TO WITHIN 2 TO 3 INCHES OF THE SOIL SURFACE EVERY 4 FEET IN ALL DIRECTIONS. STAKES MAY BE DRIVEN BEFORE OR AFTER APPLYING MULCH. SECURE MULCH TO SOIL SURFACE BY STRETCHING TWINE BETWEEN PEGS IN A CRISS-CROSS AND SQUARE PATTERN. SECURE TWINE AROUND EACH PEG WITH TWO OR MORE ROUND TURNS.
     - 4.3.2. MULCH NETTING- STAPLE PAPER, JUTE, COTTON, OR PLASTIC NETTING TO THE SOIL SURFACE. USE A DEGRADABLE NETTING IN AREAS TO BE MOWED.
     - 4.3.3. CRIMPER (MULCH ANCHORING TOOL) – A TRACTOR-DRAWN IMPLEMENT, SOMEWHAT LIKE A DISC HARROW, ESPECIALLY DESIGNED TO PUSH OR CUT SOME OF THE BROADCAST LONG FIBER MULCH 3 TO 4 INCHES INTO THE SOIL SO AS TO ANCHOR IT AND LEAVE PART STANDING UPRIGHT. THIS TECHNIQUE IS LIMITED TO AREAS TRAVERSABLE BY A TRACTOR, WHICH MUST OPERATE ON THE CONTOUR OF SLOPES. STRAW MULCH RATE MUST BE 3 TONS PER ACRE. NO TACKIFYING OR ADHESIVE AGENT IS REQUIRED.
   - 4.4. WOOD-FIBER OR PAPER-FIBER MULCH SHALL BE MADE FROM WOOD, PLANT FIBERS OR PAPER CONTAINING NO GROWTH OR GERMINATION INHIBITING MATERIALS AND APPLIED AT THE RATE OF 1,500 POUNDS PER ACRE (OR AS RECOMMENDED MY THE PRODUCT MANUFACTURER) BY A HYDROSEEDER. MULCH SHALL NOT BE MIXED IN THE TANK WITH SEED. USE IS LIMITED TO FLATTER SLOPES AND DURING OPTIMUM SEEDING PERIODS IN SPRING AND FALL.
5. IRRIGATION
   - 5.1. IF SOIL MOISTURE IS DEFICIENT, SUPPLY NEW SEEDING WITH ADEQUATE WATER (A MINIMUM OF 1/4 INCH TWICE A DAY UNTIL VEGETATION IS WELL ESTABLISHED). THIS IS ESPECIALLY TRUE WHEN SEEDINGS ARE PERFORMED IN ABNORMALLY DRY OR HOT WEATHER OR ON DROUGHTY SITES. *
6. TOP DRESSING
   - 6.1. SPRING SEEDING WILL REQUIRE AN APPLICATION OF FERTILIZER SUCH AS 10-10-10 OR EQUIVALENT AT 400 POUNDS PER ACRE OR 10 POUNDS PER 1,000 SQUARE FEET BETWEEN SEPTEMBER 1 AND OCTOBER 15.
   - 6.2. FALL SEEDING WILL REQUIRE THE ABOVE BETWEEN MARCH 15 AND MAY 1.
   - 6.3. MIXTURES DOMINATED BY WEEPING LOVEGRASS OR LEGUMES MAY NOT NEED TOPDRESSING.
7. ESTABLISHMENT OF PERMANENT VEGETATION RESTS WITH THE CONTRACTOR. THE TIMING OF SEEDING, PREPARATION OF SEEDBED, APPLICATION OF NUTRIENTS, MULCH AND OTHER MANAGEMENT STRATEGIES ARE ESSENTIAL. ESTABLISHING PERMANENT VEGETATION MEANS 80% VEGETATIVE COVER (OF THE SEEDED SPECIES) AND MOWED ONCE. THE DESIGNATION OF "MOWED ONCE" DOES NOT GUARANTEE THE PERMANENCY OF THE TURF SHOULD OTHER MAINTENANCE FACTORS BE NEGLECTED OR OTHERWISE MISMANAGED.

* IF SLOW RELEASE NITROGEN (300 POUNDS 38-0-0 PER ACRE OR EQUIVALENT) IS USED IN ADDITION TO SUGGESTED FERTILIZER, THIS FOLLOW-UP OF TOP DRESSING IS NOT MANDATORY.

PERMANENT SEEDING MIXTURE (EXCESSIVELY & WELL TO MODERATELY WELL DRAINED SOILS)

THE FOLLOWING SEED MIXTURE APPLICATION IS REQUIRED FOR PERMANENT STABILIZATION AS INDICATED ON THE SOIL EROSION AND SEDIMENT CONTROL PLANS.

COMMON NAME	BOTANICAL NAME	LBS/ACRE (LBS/1,000 SQ. FT.)
TURF-TYPE TALL FESCUE BLEND OF 3 CULTIVARS	FESTUCA ARUNDINACEA	350 (8)

THE OPTIMAL SEEDING DATES FOR THIS GRASS MIXTURE FOR USDA ZONE 7A ARE 8/15 – 10/30. SUMMER SEEDING SHALL BE PERFORMED ONLY IF ADEQUATE IRRIGATION IS PROVIDED TO ENSURE SUCCESSFUL GERMINATION.

SPECIAL NOTES

1. TEMPORARY STABILIZATION – ALL EXPOSED AREAS NOT TO BE CONSTRUCTED UPON WITHIN 14 DAYS SHOULD RECEIVE TEMPORARY STABILIZATION. THE TEMPORARY SEEDING MIXTURES SHALL BE ANNUAL RYE GRASS AT A RATE OF 4 POUND PER 1000 SQ. FT. AND LIMED AT A RATE OF 45 LBS. PER 1000 SQ. FT.
2. PERMANENT STABILIZATION – ALL EXPOSED AREAS WHICH ARE TO BE PERMANENTLY VEGETATED SHOULD BE SEEDED WITHIN 7 DAYS OF FINAL GRADING, ACCORDING TO THE PERMANENT SEEDING SPECIFICATIONS.

TOTAL AREA OF DISTURBANCE: 1.30 ACRES

TOP SOILING

TOPSOIL SHOULD BE USED WHERE SOILS ARE: SANDS, GRAVELY SOILS, CLAYS, SILTY CLAYS, VERY SHALLOW, OR WHERE THEY ARE EXTREMELY ACID (LESS THAN pH4.0) OR SALTY (COND- ACTIVITY GREATER THAN 1.0 MILLIMHOS PER CENTIMETER); OR WHERE TOPSOIL IS AVAILABLE ON SITE AND ASSURANCE OF IMPROVED VEGETATIVE GROWTH IS DESIRED.

1. MATERIALS
   - 1.1. TOPSOIL SHOULD BE FRIABLE AND LOAMY, FREE OF DEBRIS, OBJECTIONABLE WEEDS AND STONES, AND CONTAIN NO TOXIC SUBSTANCE THAT MAY BE HARMFUL TO PLANT GROWTH. A pH RANGE OF 5.0-7.5 IS ACCEPTABLE. SOLUBLE SALTS SHOULD NOT BE EXCESSIVE (CONDUCTIVITY LESS THAN 0.5 MILLIMHOS PER CENTIMETER). TOPSOIL HAULED IN FROM OFF SITE SHOULD HAVE A MINIMUM ORGANIC MATTER CONTENT OF 2.75 PERCENT. ORGANIC MATTER CONTENT MAY BE RAISED BY ADDITIVES.
2. STRIPPING AND STOCKPILING
   - 2.1. FIELD EXPLORATION SHOULD BE MADE TO DETERMINE WHETHER QUANTITY AND/OR QUALITY OF SURFACE SOIL JUSTIFIES STRIPPING.
   - 2.2. STRIPPING SHOULD BE CONFINED TO THE IMMEDIATE CONSTRUCTION AREA.
   - 2.3. WHERE FEASIBLE, LIME MAY BE APPLIED BEFORE STRIPPING AT A RATE DETERMINED BY SOIL TESTS TO BRING THE SOIL pH TO 6.5. IN LIEU OF SOIL TESTS, SEE LIME RATE GUIDE IN SEEDBED PREPARATION FOR PERMANENT VEGETATIVE COVER.
   - 2.4. A 4-6 INCH STRIPPING DEPTH IS COMMON, BUT MAY VARY DEPENDING ON THE PARTICULAR SOIL.
   - 2.5. STOCKPILES OF TOPSOIL SHOULD BE SITUATED SO AS NOT TO OBSTRUCT NATURAL DRAINAGE OR CAUSE OFF-SITE ENVIRONMENTAL DAMAGE.
   - 2.6. STOCKPILES SHOULD BE VEGETATED IN ACCORDANCE WITH TEMPORARY SEEDING STANDARDS PREVIOUSLY DESCRIBED HEREIN.
3. SITE PREPARATION
   - 3.1. GRADE AS NEEDED AND FEASIBLE TO PERMIT THE USE OF CONVENTIONAL EQUIPMENT FOR SEEDBED PREPARATION, SEEDING, MULCH APPLICATION AND ANCHORING, AND MAINTENANCE.
   - 3.2. SUBSOIL SHOULD BE TESTED FOR LIME REQUIREMENT AND LIMESTONE, IF NEEDED, SHOULD BE APPLIED TO BRING SOIL pH TO 6.5 AND INCORPORATED INTO THE SOIL AS NEARLY AS PRACTICAL TO A DEPTH OF 4 INCHES.
   - 3.3. IMMEDIATELY PRIOR TO TOPSOIL DISTRIBUTION, THE SURFACE SHOULD BE SCARIFIED 6" – 12" WHERE THERE HAS BEEN SOIL COMPACTION.
   - 3.4. EMPLOY NEEDED EROSION CONTROL PRACTICES SUCH AS DIVERSIONS, GRADE STABILIZATION STRUCTURES, CHANNEL STABILIZATION MEASURES, SEDIMENTATION BASINS, AND WATERWAYS.
4. APPLYING TOPSOIL
   - 4.1. TOPSOIL SHOULD BE HANDLED ONLY WHEN IT IS DRY ENOUGH TO WORK WITHOUT DAMAGING SOIL STRUCTURE; I.E., LESS THAN FIELD CAPACITY.
   - 4.2. A UNIFORM APPLICATION TO A DEPTH OF 5 INCHES (UNSETTLED) IS RECOMMENDED. SOILS WITH A pH OF 4.0 OR LESS OR CONTAINING IRON SULFIDE SHALL BE COVERED WITH A MINIMUM DEPTH OF 12 INCHES OF SOIL HAVING A pH OF 5.0 OR MORE.

DUST CONTROL

1. THE PURPOSE OF DUST CONTROL MEASURES IS TO PREVENT THE BLOWING AND MOVEMENT OF DUST FROM EXPOSED SOIL SURFACES, REDUCE ON-SITE AND OFF-SITE DAMAGE & HEALTH HAZARDS, AND IMPROVE TRAFFIC SAFETY.
   - 1.1. MULCHES – REVIEW MULCHING NOTES ABOVE.
   - 1.2. VEGETATIVE COVER – REVIEW NOTES ON TEMPORARY COVER.
   - 1.3. SPRAY-ON ADHESIVES – ON MINERAL SOILS (NOT EFFECTIVE ON MUCK SOILS). KEEP TRAFFIC OFF THESE AREAS.
   - 1.4.

MATERIAL	WATER DILUTION	TYPE OF NOZZLE	APPLY GALLON/ACRE
ANIONIC ASPHALT EMULSION	7:1	COARSE SPRAY	1200
LATEX EMULSION	12.5:1	FINE SPRAY	235
RESIN IN WATER	4:1	FINE SPRAY	300
ACIDULATED SOY BEAN SOAP STICK	NONE	COARSE SPRAY	1200

   - 1.5. TILLAGE – TO ROUGHEN SURFACE AND BRING CLODS TO THE SURFACE. THIS IS A E. TEMPORARY EMERGENCY MEASURE WHICH SHOULD BE USED BEFORE SOIL BLOWING STARTS. BEGIN PLOWING ON WINDWARD SIDE OF SITE. CHISEL-TYPE PLOWS SPACED ABOUT 12 INCHES APART, AND SPRING-TOOTHED HARROWS ARE EXAMPLES OF EQUIPMENT WHICH MAY PRODUCE THE DESIRED EFFECT.
   - 1.6. SPRINKLING – SITE IS SPRINKLED UNTIL THE SURFACE IS WET.
   - 1.7. BARRIERS – SOLID BOARD FENCES, SNOW FENCES, BURLAP FENCES, CRATE WALLS, BALES OF HAY AND SIMILAR MATERIAL CAN BE USED TO CONTROL AIR CURRENTS AND SOIL BLOWING.
   - 1.8. STONE – COVER SURFACE WITH CRUSHED STONE OR COARSE GRAVEL.

SOIL DE-COMPACTION AND TESTING REQUIREMENTS

SOIL COMPACTION MITIGATION EXEMPTION

AS DETERMINED BY THE STATE POLICY MAP, THE PROJECT AREA FALLS WITHIN THE METROPOLITAN PLANNING AREA (PA1). UNDER EXISTING CONDITIONS, THE SITE IS NOT COVERED IN WODDY VEGETATION NOR REGROWTH. IN ACCORDANCE WITH THE NEW JERSEY STANDARD FOR LAND GRADING (REVISED 2017), NON-WOODY VEGETATED PA1 AREAS FALL UNDER THE SOIL COMPACTION EXCEPTION LIST AS AN "URBAN REDEVELOPMENT" AND IS DEFINED BY N.J.D.E.P. AS "PREVIOUSLY DEVELOPED".

GENERAL NOTES

1. A REPORT OF COMPLIANCE MUST BE OBTAINED FROM THE DISTRICT PRIOR TO RECEIVING A CERTIFICATE OF OCCUPANCY FROM THE MUNICIPALITY. A REQUEST FOR A DISTRICT INSPECTION FOR THE RELEASE OF A REPORT OF COMPLIANCE MUST BE MADE 5 WORKING DAYS IN ADVANCE. THIS APPLIES TO BOTH COMPLETE (FINAL) AND CONDITIONAL (TEMPORARY) CERTIFICATES. ALL STREETS AND UNITS MUST BE PROPERLY IDENTIFIED. A REPORT OF COMPLIANCE WILL NOT BE RELEASED FOR A UNIT IF IT CAN NOT BE IDENTIFIED. IDENTIFY ALL UNITS AT THE SITE BY BLOCK, LOT, AND STREET ADDRESS.
2. THE CONTRACTOR SHALL BE RESPONSIBLE FOR ANY EROSION OR SEDIMENTATION THAT MAY OCCUR BELOW STORMWATER OUTFALLS OR OFFSITE AS A RESULT OF CONSTRUCTION OF THE PROJECT.
3. THE CONTRACTOR SHALL REMOVE ANY SEDIMENT THAT MAY BE SPILLED, DROPPED OR TRACKED OFF THE PROJECT SITE. ALL PAVEDRIGHT-OF-WAYS ADJACENT TO THE PROJECT SITE MUST BE MAINTAINED IN A CLEAN, SWEPT CONDITION THROUGHOUT CONSTRUCTION.

SEQUENCE OF CONSTRUCTION

ACTIVITY	WEEK NO.
1. CONTACT THE MERCER COUNTY SOIL CONSERVATION DISTRICT AT 609-586-9603 A MINIMUM OF 72 HOURS PRIOR TO ANY SOIL DISTURBANCE TO ARRANGE A PRE-CONSTRUCTION MEETING.	1
2. THE ORIGINAL MERCER COUNTY SOIL CONSERVATION DISTRICT CERTIFICATION AND PLANS MUST BE AVAILABLE AT THE SITE AT ALL TIMES.	1
3. INSTALL THE STABILIZED CONSTRUCTION ENTRANCE AND OTHER SOIL EROSION MEASURES.	1
4. CLEARING SITE.	2
5. CONSTRUCT AND GRADE CONCRETE AND ASPHALT AREA.	3-8
6. INSTALL PERMANENT STABILIZATION.	9
7. CONTACT THE MERCER COUNTY SOIL CONSERVATION DISTRICT FOR FINAL INSPECTION.	10
8. REMOVE ALL SOIL EROSION AND SEDIMENT CONTROL MEASURES.	10

REMINGTON & VERNICK ENGINEERS
1901
2059 SPRINGDALE ROAD
CHERRY HILL, NJ 08003
(856) 795-9595, FAX (856) 795-1882
WEB ADDRESS : RVE.COM
Certification of Authorization: 24 GA 28003300
Excellence • Innovation • Service

Dennis K Yoder
DATE: 09-03-2024
DENNIS K. YODER
NJ PROFESSIONAL ENGINEER LIC. No. 31866

Jessica D. Hauber
DATE: 09-03-2024
JESSICA D. HAUBER
NJ PROFESSIONAL ENGINEER LIC. No. 51487

PLANS WHICH DO NOT BEAR AN EMBOSSED SEAL ARE NOT VALID.

No.	REVISION	DATE	BY	CHK
3	PER TOWNSHIP CHECKLIST	12/02/24	ACF	DY
2	PER NJDEP COMMENTS	10/30/24	ACF	DY
1	PER ELSA PRE REVIEW	06/03/24	ACF	DY

SOIL EROSION AND SEDIMENT CONTROL NOTES

EWING LAWRANCE SEWAGE AUTHORITY
MINOR SITE PLAN - ELSA VEHICLE STORAGE BUILDING
600 WHITEHEAD ROAD; BLOCK 1202, LOT 2
TOWNSHIP OF LAWRENCE MERCER COUNTY NEW JERSEY

DRAWN BY :	DESIGN BY :	CHECKED BY :	SCALE :
A.C.F.	-	J.D.H.	AS NOTED

DATE : 05/16/2024
JOB No. : 1102M026
SHEET No. : C-12

J:\Cadd Projects\NJ\Mercer Cnty\ELSA\1102M026 - ELSA Vehicle Storage Building\Design\3. 1102M026 Drawings\D - 1102M026.dwg 12/9/2024 1:02:25 PM

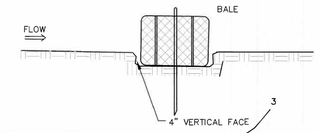

EMBEDDING DETAIL

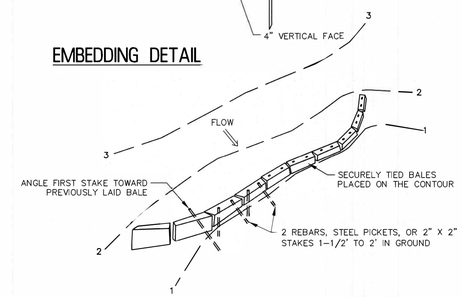

PLACEMENT AND ANCHORING DETAIL

BALE SEDIMENT BARRIERS

N.T.S.

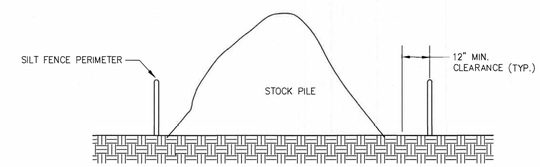

SOIL STOCKPILE DETAIL

N.T.S.

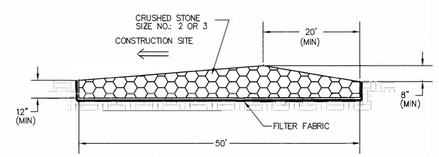

STABILIZED CONSTRUCTION ENTRANCE

(SEE PLAN FOR WIDTH)

N.T.S.

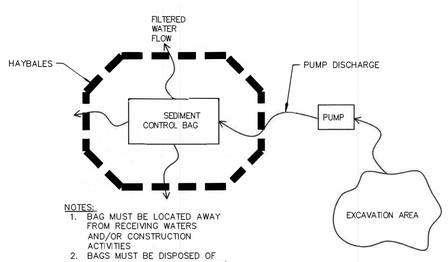

NOTES:

1. BAG MUST BE LOCATED AWAY FROM RECEIVING WATERS AND/OR CONSTRUCTION ACTIVITIES
2. BAGS MUST BE DISPOSED OF ACCORDING TO MANUFACTURER'S INSTRUCTIONS. BAGS MAY NOT BE REUSED.

FILTERED SEDIMENT CONTROL BAG FOR DEWATERING

N.T.S.

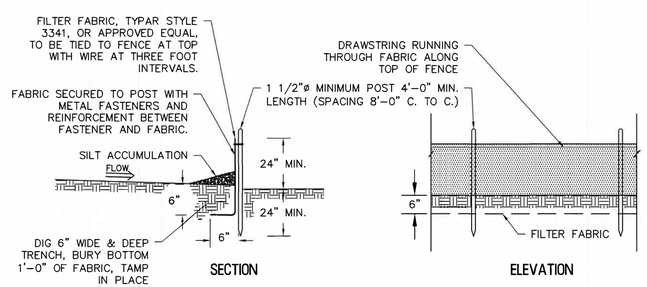

SILT FENCE DETAIL

N.T.S.

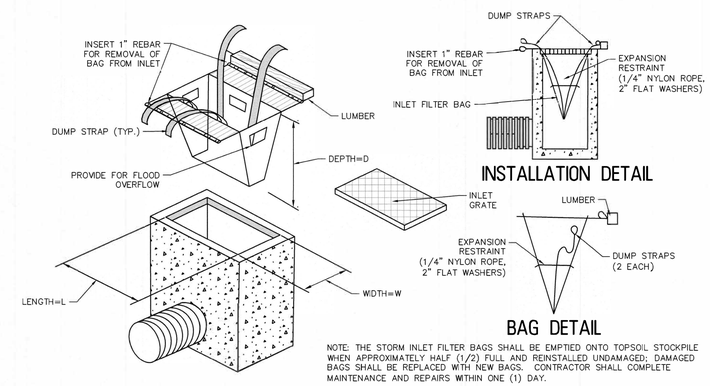

NOTE: THE STORM INLET FILTER BAGS SHALL BE EMPTIED ONTO TOPSOIL STOCKPILE WHEN APPROXIMATELY HALF (1/2) FULL AND REINSTALLED UNDAMAGED; DAMAGED BAGS SHALL BE REPLACED WITH NEW BAGS. CONTRACTOR SHALL COMPLETE MAINTENANCE AND REPAIRS WITHIN ONE (1) DAY.

INLET FILTER, TYPE 2

N.T.S.

RVE 1901

REMINGTON & VERNICK **ENGINEERS**

2059 SPRINGDALE ROAD
CHERRY HILL, NJ 08003
(856) 795-9595, FAX (856) 795-1882
WEB ADDRESS : RVE.COM
Certification of Authorization: 24.GA 28003300

Excellence • Innovation • Service

Dennis K. Yoder
DATE: 09-03-2024
DENNIS K. YODER
NJ PROFESSIONAL ENGINEER LIC. No. 31866

Jessica D. Hauber
DATE: 09-03-2024
JESSICA D. HAUBER
NJ PROFESSIONAL ENGINEER LIC. No. 51487

No.	REVISION	DATE	BY	CHK
3	PER TOWNSHIP CHECKLIST	12/02/24	ACF	DY
2	PER NJDEP COMMENTS	10/30/24	ACF	DY
1	PER ELSA PRE REVIEW	08/03/24	ACF	DY

SOIL EROSION AND SEDIMENT CONTROL DETAILS

EWING LAWRANCE SEWAGE AUTHORITY

MINOR SITE PLAN - ELSA VEHICLE STORAGE BUILDING
600 WHITEHEAD ROAD; BLOCK 1202, LOT 2

TOWNSHIP OF LAWRENCE MERCER COUNTY NEW JERSEY

DRAWN BY:	DESIGN BY:	CHECKED BY:	SCALE:
A.C.F.	-	J.D.H.	AS NOTED

DATE: 05/16/2024

JOB No.: 1102M026

SHEET No.: C-13

J:\Cloud Projects\Mercer Cnty\ELSA\1102M026 - ELSA Vehicle Storage Building\Design\3 - 1102M026.dwg - 10/30/2024 1:02:26 PM

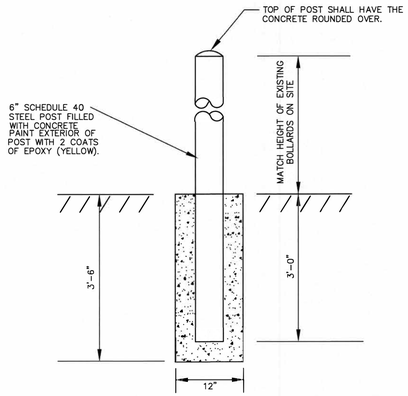

BOLLARD DETAIL

N.T.S.

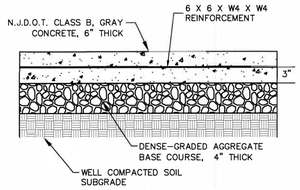

REINFORCED CONCRETE PAD

N.T.S.

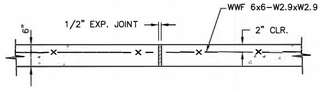

SLAB EXPANSION JOINT

N.T.S.

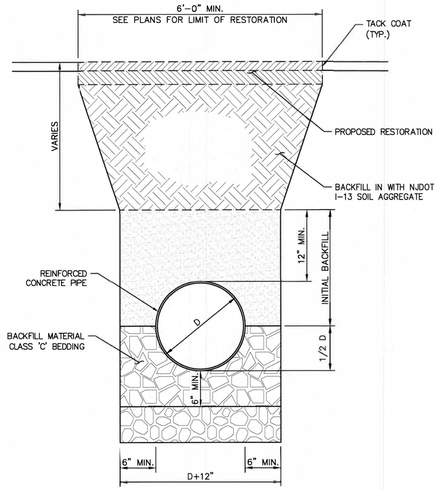

NOTE:
1. MAXIMUM WIDTH OF TRENCH SHALL NOT EXCEED THE DEPTH TO THE INVERT OF THE PROPOSED PIPELINE.
2. SEPARATE PAYMENT WILL NOT BE MADE FOR EXCAVATION, DEWATERING, FITTINGS, PIPE BEDDING, SHEETING, BRACING, SHORING, INLET CONNECTIONS, TRAPS, AND SUITABLE BACKFILL MATERIAL INVOLVED IN ALL PIPE AND ASSOCIATED STRUCTURES REMOVAL, RECONSTRUCTION AND INSTALLATION, BUT THE COST SHALL BE INCLUDED IN THE VARIOUS ITEMS OF THE PROPOSAL REGARDLESS OF DEPTH.

RCP TRENCH

N.T.S.

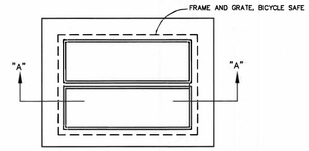

PLAN VIEW

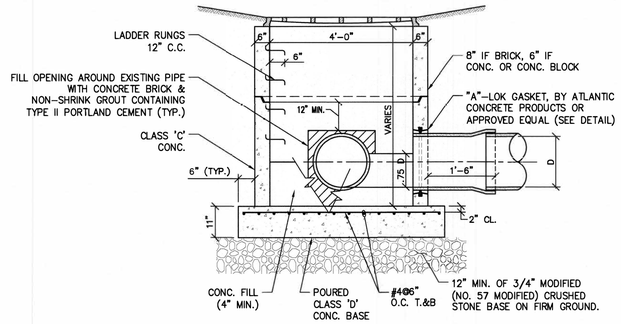

SECTION A-A

NOTES:

1. THIS INLET MAY BE CONSTRUCTED OF BRICK, CONCRETE OR CONCRETE BLOCK.
2. IF BRICK OR CONCRETE BLOCK IS USED THE BOTTOM SHALL BE SHOWN FOR CONCRETE. INVERTS TO BE ELIMINATED IN BOTTOM OF TERMINAL INLETS. BOTTOMS SHALL BE DISHED AND SLOPED TOWARDS THE OUTLET PIPE AT A RATE OF GRADE OF 2" PER FOOT. INVERTS TO BE ELIMINATED IN BOTTOM OF TERMINAL INLETS.
3. BOTTOM SHALL BE DISHED AND SLOPED TOWARDS THE OUTLET PIPE AT THE RATE OF 2" PER FOOT THIS INLET MAY BE CONSTRUCTED OF BRICK, CONCRETE OR CONCRETE BLOCK, IF BRICK OR CONCRETE BLOCK IS USED THE BOTTOM SHALL BE AS SHOWN FOR CONCRETE & THE OUTSIDE OF THE WALLS SHALL BE PLASTERED WITH 1/2" COAT BE DISHED AND SLOPPED 1:2 CEMENT SAND MORTAR.

TYPE "E" DOGHOUSE INLET DETAIL

N.T.S.

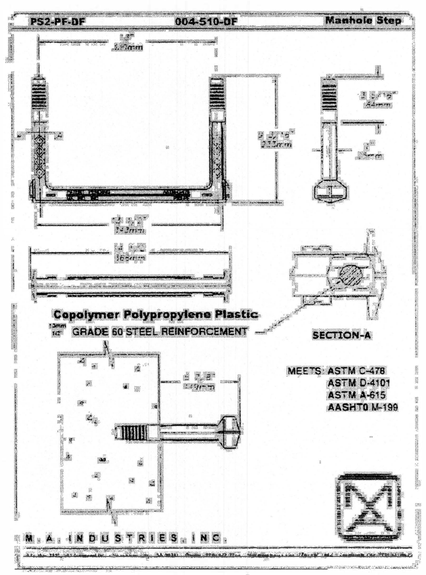

SANITARY MANHOLE STEP DETAIL

SOURCE: EWING-LAWRENCE SEWERAGE AUTHORITY
N.T.S.

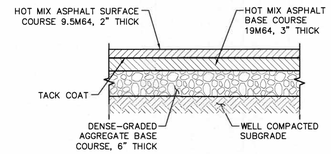

TYPICAL PAVING SECTION

SCALE: N.T.S.

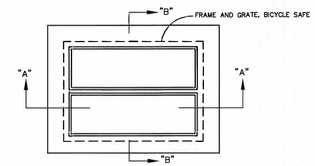

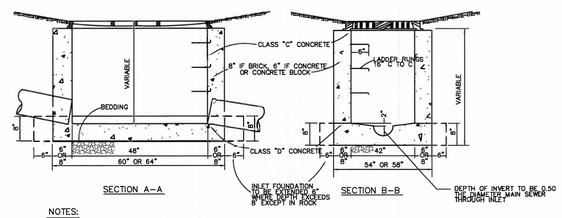

SECTION A-A SECTION B-B

NOTES:

THIS INLET MAY BE CONSTRUCTED OF BRICK, CONCRETE OR CONCRETE BLOCK. IF BRICK OR CONCRETE BLOCK IS USED THE BOTTOM SHALL BE SHOWN FOR CONCRETE.

INVERTS TO BE ELIMINATED IN BOTTOM OF TERMINAL INLETS. BOTTOMS SHALL BE DISHED AND SLOPED TOWARDS THE OUTLET PIPE AT A RATE OF GRADE OF 2" PER FOOT.

TYPE "E" INLET DETAIL

N.T.S.

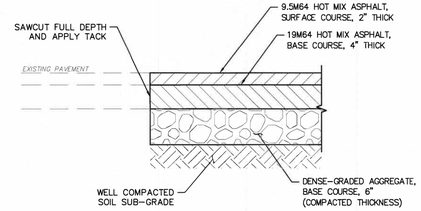

PAVEMENT RESTORATION

N.T.S.

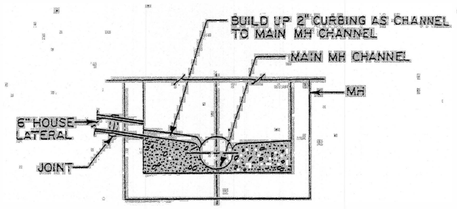

NOTES:

1. SHALLOW MH (CIRCULAR) TO BE USED AT LOCATIONS WHERE DISTANCE FROM FINISHED GRADE TO PIPE INVERT IS 3'-0" OR LESS.
2. FOR DEPTHS 3'-0" AND LESS, MEASURED FROM THE TOP OF THE PIPE, CONTRACTOR SHALL INSTALL DUCTILE IRON PIPE, CLASS 54 UNDER TRAFFIC AREAS.

SANITARY LATERAL INTO MANHOLE DETAIL

SOURCE: EWING-LAWRENCE SEWERAGE AUTHORITY
N.T.S.

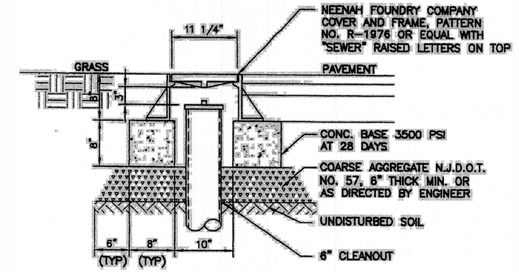

SANITARY CLEANOUT PROTECTION BOX DETAIL

SOURCE: EWING-LAWRENCE SEWERAGE AUTHORITY
N.T.S.

MANHOLE NOTES:

GENERAL

1. SHORTS SHALL BE USED AT MANHOLES
2. EXTERIOR SURFACES SHALL BE COATED WITH (2) COATS OF BITUMATIC WATERPROOFING MATERIAL. INTERIOR SHALL BE PAINTED WITH (2) COATS OF WHITE EPOXY WATERPROOFING
3. ALL CONSTRUCTION SHALL MEET STANDARD SPECIFICATIONS, LATEST REVISIONS.
4. ALL CONSTRUCTION SHALL BE IN ACCORDANCE WITH THE LATEST O.S.H.A. STANDARD WHERE POSSIBLE

PRECAST CONCRETE MANHOLE (ASTM C-478)

1. WHERE 8" AND 12" I.D. RISERS ARE USED, A TAPER SECTION CONNECTING BASE AND RISER SHALL BE REQUIRED AND SHALL HAVE A THICKNESS AS SHOWN. THE BASE SECTION AND RISER TO ALLOW FOR AT LEAST 8" MINIMUM VERTICAL CLEARANCE WHERE POSSIBLE.
2. BASES TO BE AS SHOWN IN THE SCHEDULE.

BRICK OR CONCRETE BLOCK MANHOLES (NOT SHOWN)

1. BRICK OR CONCRETE BLOCK MANHOLES MUST BE APPROVED BY THE AUTHORITY.
2. SHOP DRAWINGS MUST BE SUBMITTED FOR ALL DETAILS.

WORK AT EXISTING MANHOLES

1. THE CONTRACTOR SHALL CUT INTO THE MANHOLE AND COMPLETE A CONNECTION USING A SUITABLE ADAPTOR AS REQUIRED AND APPROVED BY THE AUTHORITY.
2. THE CONTRACTOR SHALL NOT INTERFERE WITH EXISTING SEWERAGE SERVICE DURING THE PERIOD OF CONSTRUCTION AND SHALL TAKE ALL NECESSARY PRECAUTIONS TO KEEP DEBRIS OUT OF MANHOLE.

PIPE DIA.	DIMENSIONS			
	"A"	"B"	"C"	"D"
8" TO 24"	4'-0"	5"	8"	–
27" TO 36"	5'-0"	5"	8"	2'-0"
42" TO 48"	6'-0"	7"	8"	3'-0"

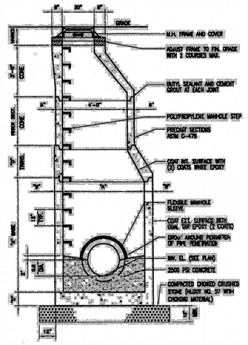

PRECAST SANITARY MANHOLE DETAIL

SOURCE: EWING-LAWRENCE SEWERAGE AUTHORITY
N.T.S.

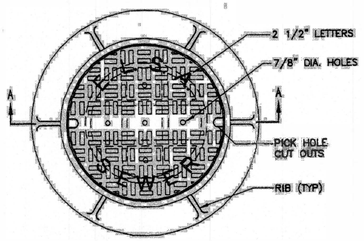

PLAN VIEW OF FRAME & COVER

MANHOLE FRAME AND COVER SHOWN ARE CIRCULAR AS MANUFACTURED BY CAMPBELL FOUNDRY CAT. No. 1009 SEE FIG. 14 THRU 17 OF 34 FOR MANHOLE SELECTION

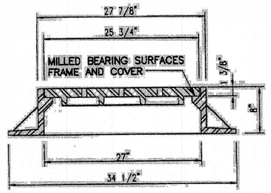

SECTION "A - A"
(FRAME AND COVER)

STANDARD CAST IRON MANHOLE FRAME AND COVER

NOTE: PRIVATE SEWERS SHALL NOT HAVE THE NAME "ELSA" ON THE COVER

SANITARY FRAME AND COVER DETAIL

SOURCE: EWING-LAWRENCE SEWERAGE AUTHORITY
N.T.S.

RVE 1901
REMINGTON & VERNICK ENGINEERS
2059 SPRINGDALE ROAD
CHERRY HILL, NJ 08003
(856) 795-9595, FAX (856) 795-1882
WEB ADDRESS : RVE.COM
Certification of Authorization: 24 GA 28003300
Excellence • Innovation • Service

DATE: 09-03-2024
DENNIS K. YODER
NJ PROFESSIONAL ENGINEER LIC. No. 31866

DATE: 09-03-2024
JESSICA D. HAUBER
NJ PROFESSIONAL ENGINEER LIC. No. 51487

PLANS WHICH DO NOT BEAR AN EMBOSSED SEAL ARE NOT VALID

No	REVISION	DATE	BY	CHK
3	PER TOWNSHIP CHECKLIST	12/20/24	ACF	DY
2	PER NJDEP COMMENTS	10/09/24	ACF	DY
1	PER ELSA PRE REVIEW	06/03/24	ACF	DY

CONSTRUCTION DETAILS

EWING LAWRANCE SEWAGE AUTHORITY

MINOR SITE PLAN - ELSA VEHICLE STORAGE BUILDING
600 WHITEHEAD ROAD; BLOCK 1202, LOT 2

TOWNSHIP OF LAWRENCE MERCER COUNTY NEW JERSEY

DRAWN BY	DESIGN BY	CHECKED BY	SCALE
A.C.F.	-	J.D.H.	AS NOTED
DATE 05/16/2024		SHEET No. C-14	
JOB No. 1102M026			

P:\Civil Projects\N\Mercer Co\ELSA\1102M026 - ELSA Vehicle Storage Building\Dwgs\3. 1102M026.dwg 12/20/2024 12:27 PM

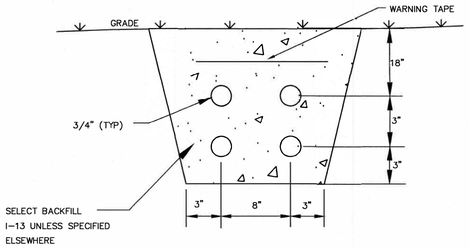

ELECTRICAL CONDUIT TRENCH DETAIL

N.T.S.

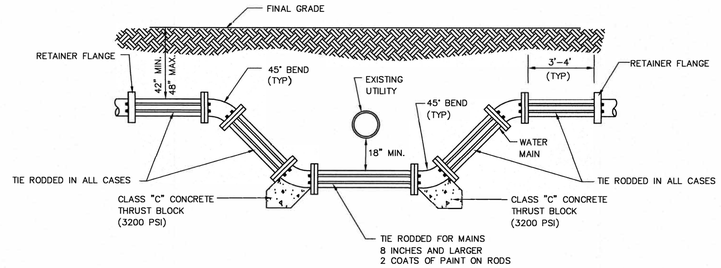

WATER MAIN OFF-SET DETAIL

N.T.S.

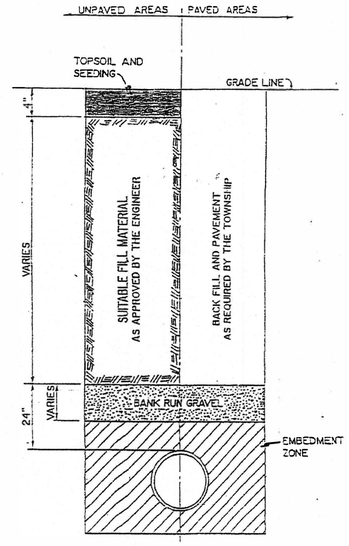

SANITARY TYPICAL TRENCH DETAIL

SOURCE: EWING-LAWRENCE SEWERAGE AUTHORITY
N.T.S.

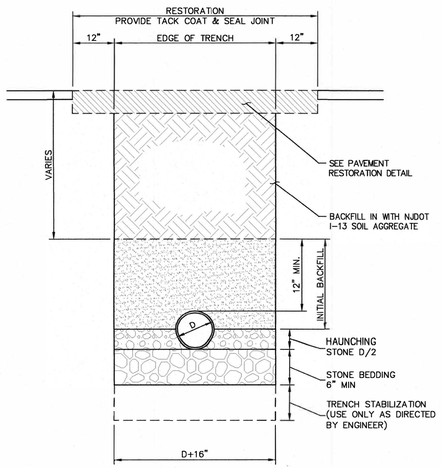

NOTE:
MAXIMUM WIDTH OF TRENCH SHALL NOT EXCEED THE DEPTH TO THE INVERT OF THE PROPOSED PIPELINE.

PVC/HDPE TRENCH

N.T.S.

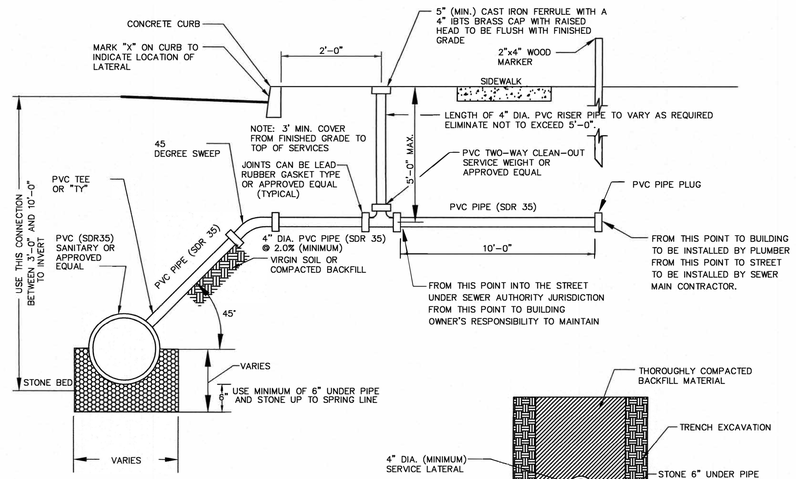

NOTE: TRENCH BOTTOM TO BE VIRGIN SOIL, 0.75" STONE OR MECHANICALLY TAMPED BACKFILL

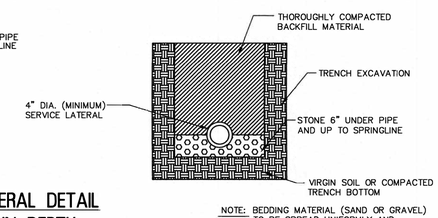

NOTE: BEDDING MATERIAL (SAND OR GRAVEL) TO BE SPREAD UNIFORMLY AND COMPACTED UNDER PIPE TO PROPER GRADIENT.

TYPICAL LATERAL DETAIL
3' TO 10' IN DEPTH

N.T.S.

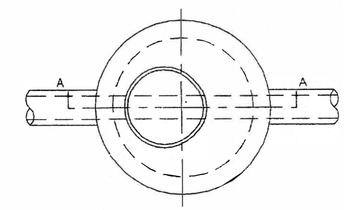

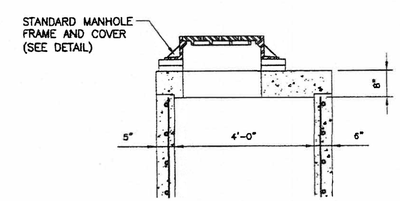

NOTE: OFFSET M.H. COVERS SHALL BE POSITIONED ABOVE THE CENTER LINE OF THE MAIN

SANITARY SLAB TOP DETAIL

SOURCE: EWING-LAWRENCE SEWERAGE AUTHORITY
N.T.S.

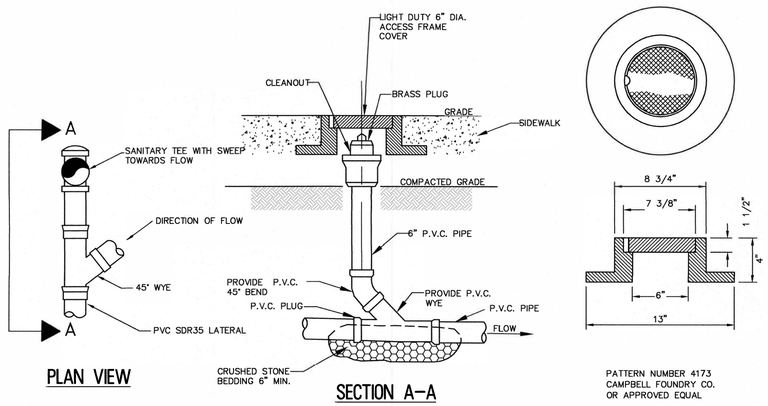

PATTERN NUMBER 4173
CAMPBELL FOUNDRY CO.
OR APPROVED EQUAL

FOR CLEANOUTS IN GRASSED AREAS, TERMINATE VERTICAL PIPE AT GRADE LEVEL AND PROVIDE THREADED CAP.

SANITARY LATERAL/ROOF DRAIN CLEANOUT DETAIL

N.T.S.

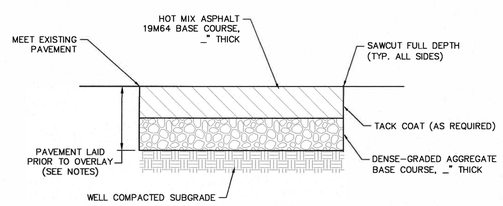

NOTES:
1. INITIAL PLACEMENT OF 19M64 BASE COURSE SHALL BE 6" THICK AND MADE FLUSH WITH THE EXISTING PAVED SURFACE. FOLLOWING MILLING, THE FINAL BASE COURSE THICKNESS SHALL BE NO LESS THAN 4".

TEMPORARY HOT MIX ASPHALT PAVEMENT REPAIR DETAIL

N.T.S.

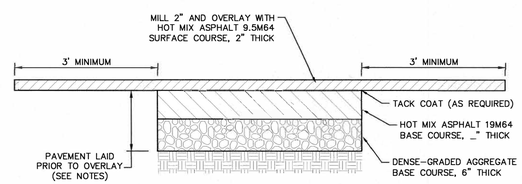

NOTES:
1. CONTRACTOR TO DELAY MILL AND OVERLAY FOR A MINIMUM OF 30 DAYS TO ALLOW FOR ANY SETTLEMENT TO OCCUR. NO ADDITIONAL PAYMENT WILL BE MADE TO THE CONTRACTOR FOR DELAY IN THE PROCESS.

FINAL HOT MIX ASPHALT PAVEMENT RESTORATION DETAIL

N.T.S.

RVE 1901
REMINGTON & VERNICK ENGINEERS
2059 SPRINGDALE ROAD
CHERRY HILL, NJ 08003
(856) 795-9595, FAX (856) 795-1882
WEB ADDRESS : RVE.COM
Certification of Authorization: 24 GA 28003300
Excellence • Innovation • Service

DATE: 09-03-2024
DENNIS K. YODER
NJ PROFESSIONAL ENGINEER LIC. No. 31866

DATE: 09-03-2024
JESSICA D. HAUBER
NJ PROFESSIONAL ENGINEER LIC. No. 51487

No.	REVISION	DATE	BY	CHK
3	PER TOWNSHIP CHECKLIST	12/02/24	ACF	DY
2	PER NJDEP COMMENTS	10/30/24	ACF	DY
1	PER ELSA PRE REVIEW	06/03/24	ACF	DY

CONSTRUCTION DETAILS

EWING LAWRANCE SEWAGE AUTHORITY

MINOR SITE PLAN - ELSA VEHICLE STORAGE BUILDING
600 WHITEHEAD ROAD; BLOCK 1202, LOT 2

TOWNSHIP OF LAWRENCE MERCER COUNTY NEW JERSEY

DRAWN BY :	DESIGN BY :	CHECKED BY :	SCALE :
A.C.F.	-	J.D.H.	AS NOTED

DATE : 05/16/2024
JOB No. : 1102M026
SHEET No. : C-15

J:\Civil Projects\Alamer Corp\1102M026 - ELSA Vehicle Storage Building\Design\1102M026.dwg\C-15\Details.dwg 10/30/2024 1:52:32 PM

GENERAL NOTES

DESIGN CRITERIA

1. LIVE LOAD:
   - A. ROOF LIVE LOAD 20 PSF
   - B. FLOOR LIVE LOAD 250 PSF
2. ROOF DEAD LOAD:
   - A. METAL DECK 3PSF
   - B. STEEL FRAMING 2PSF
   - C. COLLATERAL 10PSF
   - TOTAL 5PSF (15PSF W/COLLATERAL)
3. WIND LOADING PER IBC 2021 – NEW JERSEY EDITION:
   - A. BASIC WIND VELOCITY (V): 126 MPH
   - B. EXPOSURE CATEGORY: C
   - C. RISK CATEGORY: III
4. SEISMIC LOADING PER IBC 2021 – NEW JERSEY EDITION:
   - A. RESPONSE ACCELERATOR: S_S = 0.215 S_{DS} = 0.23
   - B. S_1 = 0.051 S_{D1} = 0.082
   - C. SEISMIC DESIGN CATEGORY: B
   - D. SEISMIC SITE CLASSIFICATION: D
   - E. IMPORTANCE FACTOR I_E: 1.25
5. SNOW LOADING PER IBC 2021 – NEW JERSEY EDITION:
   - A. GROUND SNOW LOAD: 25 PSF
   - B. IMPORTANCE FACTOR: 1.1

FOUNDATIONS

1. ALL EXISTING FILL MATERIALS, CONSISTING OF GRAVEL, BRICK FRAGMENTS, CONCRETE CHIPS, WOOD CHIPS, AND DEMOLITION DEBRIS SHALL BE REMOVED IN THE REGIONS OF ALL FOUNDATIONS AND UNDER AREAS OF SLAB–ON–GRADE.
2. THE SLAB ON GRADE SHALL REST ON A MINIMUM OF 6 INCHES OF COMPACTED GRANULAR FILL.
3. PROOF ROLL SLAB SUBGRADE UNDER THE DIRECTION OF THE INSPECTION AGENCY. REMOVE ALL UNSUITABLE AREAS AND REPLACE WITH COMPACTED STRUCTURAL FILL MATERIALS. COMPACT FILL TO AT LEAST 95 PERCENT OF THE MAXIMUM DENSITY AS DETERMINED BY THE ASTM D 1557 MODIFIED PROCTOR TEST.
4. SHALLOW FOUNDATIONS SHALL BE FOOTINGS TO BEAR ON UNDISTURBED SOIL, HAVING A MINIMUM SAFE BEARING CAPACITY OF 1.5 KSF. THE TESTING AND INSPECTION AGENCY SHALL VERIFY SOIL BEARING CAPACITY AT EACH WALL FOOTING PRIOR TO INSTALLATION OF FOOTING. NOTIFY ENGINEER OF ANY VARIATION FROM ANTICIPATED BEARING CAPACITY FOR APPROPRIATE REDESIGN OF FOOTING.
5. THE BOTTOMS OF ALL EXTERIOR FOOTINGS SHALL BE 3'–0" MINIMUM BELOW FINISHED GRADE.
6. EDGES OF FOOTINGS SHALL NOT BE PLACED AT A GREATER THAN 1 (VERTICAL) TO 2 (HORIZONTAL) SLOPE WITH RESPECT TO ANY ADJACENT FOOTING OR EXCAVATION.
7. ALL ADJACENT COLUMN FOOTINGS THAT ABUT SHALL BE SEPARATED BY A PAPER JOINT.
8. BACKFILLING AGAINST WALLS SHALL NOT BE DONE UNTIL CONCRETE HAS BEEN CURED TO ATTAIN SUFFICIENT STRENGTH (7 DAYS MINIMUM) AND WALLS ARE PROPERLY SHORED AND/OR BRACED. BACKFILL FOUNDATION WALLS WITH EARTH ON BOTH SIDES OF THE WALL BY ALTERNATELY PLACING BACKFILL ON EACH SIDE SO THAT HEIGHT OF BACKFILL DOES NOT DIFFER BY MORE THAN 1'–6" FROM OTHER SIDE.
9. THE CONTRACTOR SHALL SAFEGUARD AND PROTECT ALL EXCAVATIONS AND ALL EXCAVATIONS SHALL BE KEPT FREE OF WATER.
10. NO HORIZONTAL JOINTS SHALL BE PLACED IN WALLS EXCEPT AS SHOWN ON THE DRAWINGS WITHOUT APPROVAL OF THE ENGINEER.
11. THE CONTRACTOR SHALL REFER TO THE ARCHITECTURAL, PLUMBING, MECHANICAL, AND ELECTRICAL DRAWINGS FOR ALL LOCATIONS OF TRENCHES, PITS, CONDUITS, ETC. NOT SHOWN ON THE STRUCTURAL DRAWINGS.

FOUNDATION CONCRETE

1. ALL CONCRETE SHALL BE NORMAL WEIGHT STRUCTURAL CONCRETE HAVING A DESIGN COMPRESSIVE STRENGTH AT 28 DAYS AS FOLLOWS:
   - A. FOOTINGS 4,000 PSI
   - B. WALLS AND PIERS 4,000 PSI
   - C. SLAB–ON–GRADE 4,000 PSI
2. NO CONCRETE SHALL BE PLACED UNTIL CONCRETE DESIGN MIXES HAVE BEEN SUBMITTED FOR EACH CLASS OF CONCRETE NOTED ABOVE AND HAVE BEEN APPROVED BY THE ENGINEER
3. REINFORCING STEEL SHALL BE DEFORMED BARS OF INTERMEDIATE GRADE NEW BILLET STEEL CONFORMING TO CURRENT REQUIREMENTS OF ASTM A 615, GRADE 60. LAP BARS 40 DIAMETER UNLESS OTHERWISE SHOWN. ALL HOOKS SHALL BE STANDARD HOOKS, UNLESS OTHERWISE NOTED.
4. WELDED WIRE FABRIC SHALL CONFORM TO ASTM A 185.
5. ALL MESH SHALL BE SPLICED SO THAT THE OVERLAP OF THE OUTERMOST CROSS WIRES OF EACH ADJOINING SHEET IS NOT LESS THAN THE SPACING OF THE CROSS WIRES PLUS 2 INCHES, UNLESS NOTED OTHERWISE.
6. FOR ALL SLABS ON GRADE WHERE NOT OTHERWISE SPECIFIED, USE 6x6–W2.9xW2.9 W.W.F.
7. MINIMUM STEEL PROTECTION, UNLESS OTHERWISE SHOWN, SHALL BE 1–INCH FOR INTERIOR FACE OF WALLS, 2 INCHES FOR EXTERIOR FACE OF WALLS, 3 INCHES FOR FOOTINGS AND OTHER STRUCTURAL CONCRETE DEPOSITED AGAINST GROUND, 2 INCHES FOR CONCRETE PERMANENTLY EXPOSED TO EARTH OR WEATHER.
8. ALL STRUCTURAL MEMBERS SHALL BE POURED FOR THEIR FULL DEPTHS IN ONE OPERATION. CONSTRUCTION JOINTS, SUCH AS DAY'S POUR JOINTS, SHALL BE LOCATED IN THE MIDDLE THIRD OF THE SPAN, MAIN REINFORCING TO RUN THROUGH THE JOINT, KEY AND ROUGHEN JOINTS TO EXPOSE AGGREGATE. CONTRACTOR SHALL SUBMIT DRAWING INDICATING CONSTRUCTION JOINT LOCATIONS FOR APPROVAL.
9. NO CONCRETE SHALL BE PLACED IN WATER.
10. ALL SLABS ON GRADE SHALL HAVE THICKENINGS, DEPRESSIONS, OPENINGS, ETC. AS SHOWN ON OR AS REQUIRED BY VARIOUS TRADES.
11. REFER TO ARCHITECTURAL DRAWINGS AND/OR SPECIFICATIONS FOR CONCRETE FINISHES.
12. FOR ADDITIONAL CONCRETE WORK NOT SHOWN ON STRUCTURAL DRAWINGS, SEE ARCHITECTURAL DRAWINGS.

PRE–ENGINEERED BUILDING

1. PRE–ENGINEERED BUILDING SHALL BE PROVIDED AS SHOWN ON THE DRAWINGS AND DETAILED IN THE SPECIFICATIONS.
2. THE PRE–ENGINEERED BUILDING SHALL BE DESIGNED BY A LICENSED PROFESSIONAL ENGINEER IN THE STATE OF NEW JERSEY. SIGNED AND SEALED CALCULATIONS SHALL BE SUBMITTED FOR REVIEW AND APPROVAL.
3. BUILDING DESIGN SHALL INCLUDE ALL MECHANICAL, ELECTRICAL, PLUMBING, AND MISCELLANEOUS LOADING.
4. BUILDING DESIGN SHALL ALSO INCLUDE ALL ADDITIONAL LOADS FROM FLOORS AND ADJACENT STRUCTURE AS SHOWN ON THE PLANS.
5. RIDGE VENTS SHALL BE COORDINATED WITH THE PRE–FABRICATED BUILDING MANUFACTURER.
6. NECESSARY CURB DETAILS AND EAVE DETAIL SHALL BE COORDINATED BY THE CONTRACTOR WITH THE PRE–FABRICATED BUILDING MANUFACTURER.

MASONRY

1. HOLLOW CONCRETE MASONRY UNITS ASTM C90, GRADE N, TYPE 1 NORMAL WEIGHT 1900 PSI NET AREA COMPRESSIVE.
2. MORTAR SHALL BE ASTM C270, TYPE S FOR ALL REINFORCED MASONRY, EXTERIOR WALLS AND WALLS BELOW GRADE.
3. GROUT SHALL BE ASTM C476, 28 DAY COMPRESSIVE STRENGTH OF 3,000 PSI.
4. REINFORCING STEEL GRADE 60 REINFORCING BARS.
5. HORIZONTAL JOINT REINFORCEMENT ASTM A951.
6. STRENGTH OF MASONRY ASSEMBLY f'm = 1,500 PSI.
7. CONSTRUCTION SHALL CONFORM TO SPECIFICATIONS FOR MASONRY STRUCTURES, ACI 530.1
8. REINFORCING METAL TIES AND ANCHORS SHALL BE PROTECTED FROM CONTACT WITH SOIL AND BEFORE BEING PLACED SHALL BE FREE FROM LOOSE RUST AND OTHER COATINGS THAT WILL DESTROY OR REDUCE THE BOND. MINIMUM LAP SHALL BE 48 BAR DIAMETERS FOR REBAR AND 6" FOR JOINT REINFORCEMENT.
9. SHOP DRAWINGS SHOWING ALL BAR REINFORCING IN ELEVATION (1/8" TO 1'–0" MINIMUM SCALE) SHALL BE SUBMITTED AND REVIEWED PRIOR TO CONSTRUCTION.
10. ALL MASONRY WALLS TO HAVE 9 GAGE TRUSS TYPE HORIZONTAL REINFORCEMENT AT 16 INCHES ON CENTER.
11. MASONRY UNITS SHALL BE STEAM CURED, A MINIMUM OF 28 DAYS AT THE TIME OF DELIVERY AND CONTINUOUSLY PROTECTED FROM EXPOSURE TO RAIN OR OTHER SOURCES OF WATER FROM TIME OF CASTING TO FINAL PLACEMENT IN WALL. MASONRY UNITS SHALL BE DRY, FREE FROM SOIL, ICE AND FROST WHEN LAID IN WALL. SEE ACI 530.1 FOR COLD AND HOT WEATHER CONSTRUCTION AND WALL PROTECTION REQUIREMENTS.

STRUCTURAL STEEL

1. STRUCTURAL STEEL SHALL CONFORM TO THE FOLLOWING ASTM DESIGNATIONS, LATEST EDITION:
   - A. STRUCTURAL STEEL SHAPES ASTM A992 HAVING A MINIMUM YIELD STRENGTH OF 50 KSI.
   - B. MISC SHAPES, BARS, AND PLATES – A 36 HAVING A MINIMUM YIELD STRENGTH OF 36 KS.
   - C. ROUND PIPE – A 53, GRADE B HAVING A MINIMUM YIELD STRENGTH OF 35 KS.
   - D. SQUARE AND RECTANGULAR TUBING – A 500, GRADE B HAVING A MINIMUM YIELD STRENGTH OF 46 KSI.
2. BOLTS SHALL CONFORM TO THE FOLLOWING ASTM DESIGNATIONS: HIGH STRENGTH BOLTS–A 325 OR A 490; ANCHOR BOLTS–F1554; STANDARD FASTENERS–A 307.
3. ALL WELDING ELECTRODES SHALL CONFORM TO THE E–70 SERIES OF THE SPECIFICATION FOR MILD STEEL ARC WELDING ELECTRODES ASTM A 233.
4. ALL BOLTS SHALL BE 3/4–INCH DIAMETER, OPEN HOLES 13/16–INCH DIAMETER, UNLESS OTHERWISE SHOWN OR NOTED.
5. ALL SHOP CONNECTIONS MAY BE HIGH STRENGTH BOLTED OR WELDED.
6. ALL FIELD CONNECTIONS MAY BE HIGH STRENGTH BOLTED EXCEPT WHERE DETAILS INDICATE WELDING.
7. ALL HIGH STRENGTH BOLTED CONNECTIONS SHALL BE INSTALLED IN ACCORDANCE WITH SPECIFICATION FOR STRUCTURAL JOINTS USING ASTM A 325 OR A 490 BOLTS.
8. ALL HIGH STRENGTH BOLTED CONNECTIONS SHALL BE FULLY PRE–TENSIONED UNLESS NOTED OTHERWISE.
9. ALL HIGH STRENGTH BOLTS IN OVERSIZED HOLES SHALL BE SLIP CRITICAL.
10. ALL HIGH STRENGTH BOLTED CONNECTIONS USED FOR KICKERS AND BRACING MEMBERS WHICH ARE FABRICATED WITH SLOTTED HOLES SHALL USE SLIP–CRITICAL BOLTS. IF STANDARD HOLES ARE USED, BOLTS SHALL BE FULLY PRE–TENSIONED.
11. NO PENETRATIONS ARE PERMITTED THROUGH STRUCTURAL STEEL MEMBERS UNLESS INDICATED ON STRUCTURAL DRAWINGS OR APPROVED BY ENGINEER.
12. APPROVAL OF THE ENGINEER SHALL BE MANDATORY FOR THE USE OF CUTTING TORCH IN THE FIELD.
13. DURING ERECTION, STRUCTURAL STEEL FRAME SHALL BE ADEQUATELY BRACED IN ALL LINES, TWO WAYS.
14. CONNECTIONS SHALL BE DESIGNED PER AISC TO CARRY FULL CAPACITY OF UNIFORMLY LOADED MEMBER, UNLESS NOTED OTHERWISE. REACTIONS GREATER THAN FULL MEMBER CAPACITY ARE INDICATED THUS (60K) ON PLAN.
15. ALL GROUT UNDER STEEL PLATES SHALL BE NON–SHRINK "PRE–MIX" TYPE AND SHALL HAVE A MINIMUM COMPRESSIVE STRENGTH OF 5,000 PSI.
16. FOR ALL MISCELLANEOUS STEEL CONSTRUCTION NOT SHOWN ON STRUCTURAL DRAWINGS, SEE ARCHITECTURAL DRAWINGS.
17. EXPANSION BOLTS SHALL BE 3/4–INCH DIAMETER KWIK BOLT ANCHORS AS MANUFACTURED BY HILTI OR APPROVED EQUIVALENT AS APPROVED BY THE ENGINEER, AND INSTALLED IN ACCORDANCE WITH MANUFACTURER'S INSTRUCTIONS.
18. ALL STEEL COLUMN BASE PLATES SHALL INCLUDE LEVELING PLATES AS REQUIRED FOR CONSTRUCTION.
19. ALL EXPOSED / EXTERIOR STEEL SHALL BE HOT DIPPED GALVANIZED OR STAINLESS STEEL, UNLESS OTHERWISE SHOWN ON THE DRAWINGS.

METAL DECKING

1. METAL DECKING SHALL BE MADE OF STEEL CONFORMING TO ASTM A 446 FOR GALVANIZED DECK HAVING A MINIMUM YIELD STRENGTH OF 33,000 PSI. CORRUGATED METAL DECK FOR PERMANENT FORMWORK SHALL BE MADE OF STEEL CONFORMING TO ASTM A 446, GRADE E WITH A MINIMUM YIELD STRENGTH OF 80,000 PSI.
2. METAL DECKING USED IN FLOOR CONSTRUCTION SHALL HAVE A PROTECTIVE ZINC COATING CONFORMING TO ASTM A 525, G–60. METAL DECKING USED IN ROOF CONSTRUCTION SHALL HAVE A PROTECTIVE ZINC COATING CONFORMING TO ASTM A 525, G–90.
3. ALL METAL DECK HAS BEEN DESIGNED TO BE CONTINUOUS OVER THREE SPANS MINIMUM, AND SHALL BEAR AT LEAST 2 INCHES ON STEEL SUPPORTS. FOR ONE OR TWO SPAN CONDITIONS, THE CONTRACTOR SHALL PROVIDE SHORING AS REQUIRED, OR FURNISH HIGHER GAGE DECK AS REQUIRED TO SUPPORT ALL THE APPLICABLE LOADS.
4. DECK SHALL BE WELDED TO SUPPORTING STEEL AT ENDS OF UNITS AND AT ALL INTERMEDIATE SUPPORTS IN ACCORDANCE WITH MANUFACTURER'S RECOMMENDATIONS. SIDE LAPS SHALL BE WELDED OR SCREWED AT 3'–0" ON CENTER MAXIMUM FOR SPANS OF 5'–0". USE WELDING WASHERS FOR ATTACHING METAL DECK OF 23 GAGE OR LIGHTER.
5. PROVIDE REINFORCING CHANNELS, STANDARD CLOSURES, CANT STRIPS, FINISH STRIPS, POUR STOPS AND OTHER ACCESSORIES AS SHOWN ON DRAWINGS OR AS REQUIRED.
6. METAL DECK SHALL HAVE THE FOLLOWING MINIMUM PROPERTIES PER FOOT WIDTH:
   - A. 1 1/2", TYPE B, WIDE RIB 20 GAGE (ROOF CONSTRUCTION) I = 0.212 IN.^{4} S = 0.234 IN.^{3}
   - B. 9/16" CORRUGATED 28 GAGE (PERMANENT FORMWORK FOR FLOOR SLAB) I = 0.012 IN.^{4} S = 0.035 IN.^{3}

MISCELLANEOUS

1. CONTRACTOR SHALL VERIFY CONDITIONS IN THE FIELD AND IMMEDIATELY NOTIFY ENGINEER OF ANY CONDITIONS NOT AS ASSUMED; HE SHALL TAKE FIELD MEASUREMENTS AS REQUIRED AND BE RESPONSIBLE FOR SAME.
2. CONTRACTOR SHALL COORDINATE WITH ALL RELATED TRADES FOR DETAILING, FABRICATION, AND ERECTION PRIOR TO SUBMITTING SHOP DRAWINGS FOR APPROVAL.
3. ALL STRUCTURAL WORK SHALL BE COORDINATED WITH ARCHITECTURAL, MECHANICAL, ELECTRICAL, PLUMBING, ETC. REQUIREMENTS. DISCREPANCIES AND/OR INTERFERENCE SHALL BE REPORTED TO THE ENGINEER IMMEDIATELY.
4. GENERAL CONTRACTOR TO PROVIDE APPROPRIATE NUMBER OF COPIES OF ONE COMPLETE COORDINATED DRAWING SHOWING ALL SLEEVES, CONDUIT BOXOUT, DUCT OPENINGS, ETC. AS REQUIRED FOR ALL TRADES FOR ENGINEER'S APPROVAL. THIS SHALL BE DONE A MINIMUM OF TWO WEEKS PRIOR TO POURING AFFECTED SLABS, COLUMNS, OR FOOTINGS.
5. NO OPENINGS SHALL BE MADE IN ANY STRUCTURAL MEMBER UNLESS SPECIFICALLY SHOWN ON THE STRUCTURAL DRAWINGS OR OTHER APPROVAL FROM THE ENGINEER.
6. SUPPORT DETAILS FOR ARCHITECTURAL, MECHANICAL, ELECTRICAL, AND PLUMBING EQUIPMENT IS BASED UPON AVAILABLE INFORMATION OF MANUFACTURER. CONTRACTOR SHALL COORDINATE REQUIREMENTS OF ACTUAL EQUIPMENT AND SHALL PROVIDE ANY ADDITIONAL REQUIRED FRAMING.

ABBREVIATIONS

E.F.	EACH FACE
WF1	WALL FOOTING
CMU	CONCRETE MASONRY UNIT
V.I.F.	VERIFY IN THE FIELD
O.C.	ON CENTER
E.W.	EACH WAY
T&B	TOP & BOTTOM
AL	ALUMINUM
CS	CARBON STEEL
SS	STAINLESS STEEL
CL	CENTER LINE
GALV.	GALVANIZED
T.O.M.	TOP OF MASONRY
EOS	EDGE OF SALB

STRUCTURAL DRAWING LIST

DRAWING #	DRAWING TITLE
S–1	STRUCTURAL COVER SHEET
S–2	FOUNDATION & TOP SLAB PLANS
S–3	BUILDING FLOOR PLAN
S–4	EXTERIOR ELEVATIONS
S–5	STRUCTURAL SECTIONS AND DETAILS
S–6	STRUCTURAL SECTIONS AND DETAILS

RVE 1901
REMINGTON & VERNICK ENGINEERS
2059 SPRINGDALE ROAD
CHERRY HILL, NJ 08003
(856) 795-9595, FAX (856) 795-1882
WEB ADDRESS : RVE.COM
Certification of Authorization: 24 GA 28003300
Excellence • Innovation • Service

DATE: 01-15-2025
DENNIS K. YODER
NJ PROFESSIONAL ENGINEER LIC. No. 31866

DATE: 01-15-2025
KENNETH C. RESSLER
NJ PROFESSIONAL ENGINEER LIC. No. 34559

PLANS WHICH DO NOT BEAR AN EMBOSSED SEAL ARE NOT VALID

No.	REVISION	DATE	BY	CHK
3	PER ELSA INHOUSE REVIEW	12-24	JD	AK
2	PER ELSA FINAL COMMENTS	11-24	JD	AK
1	PER ELSA PRE REVIEW COMMENTS	06-03-24	JD	AK

STRUCTURAL COVER SHEET

EWING LAWRANCE SEWAGE AUTHORITY

ELSA VEHICLE STORAGE BUILDING

TOWNSHIP OF LAWRENCE MERCER COUNTY NEW JERSEY

DRAWN BY:	DESIGN BY:	CHECKED BY:	SCALE:
J.G.	A.K.	K.C.R.	AS NOTED
DATE: 5.16.2024		SHEET No.: S-1	
JOB No.: 1102M026			

P:\CADD Projects\Mercer Co\Ewing Lawrence Sewerage Authority\1102M026 PW\Building\Structural Plans\S-1 Cover Sheet.dwg 1/15/2025 9:33:25 AM

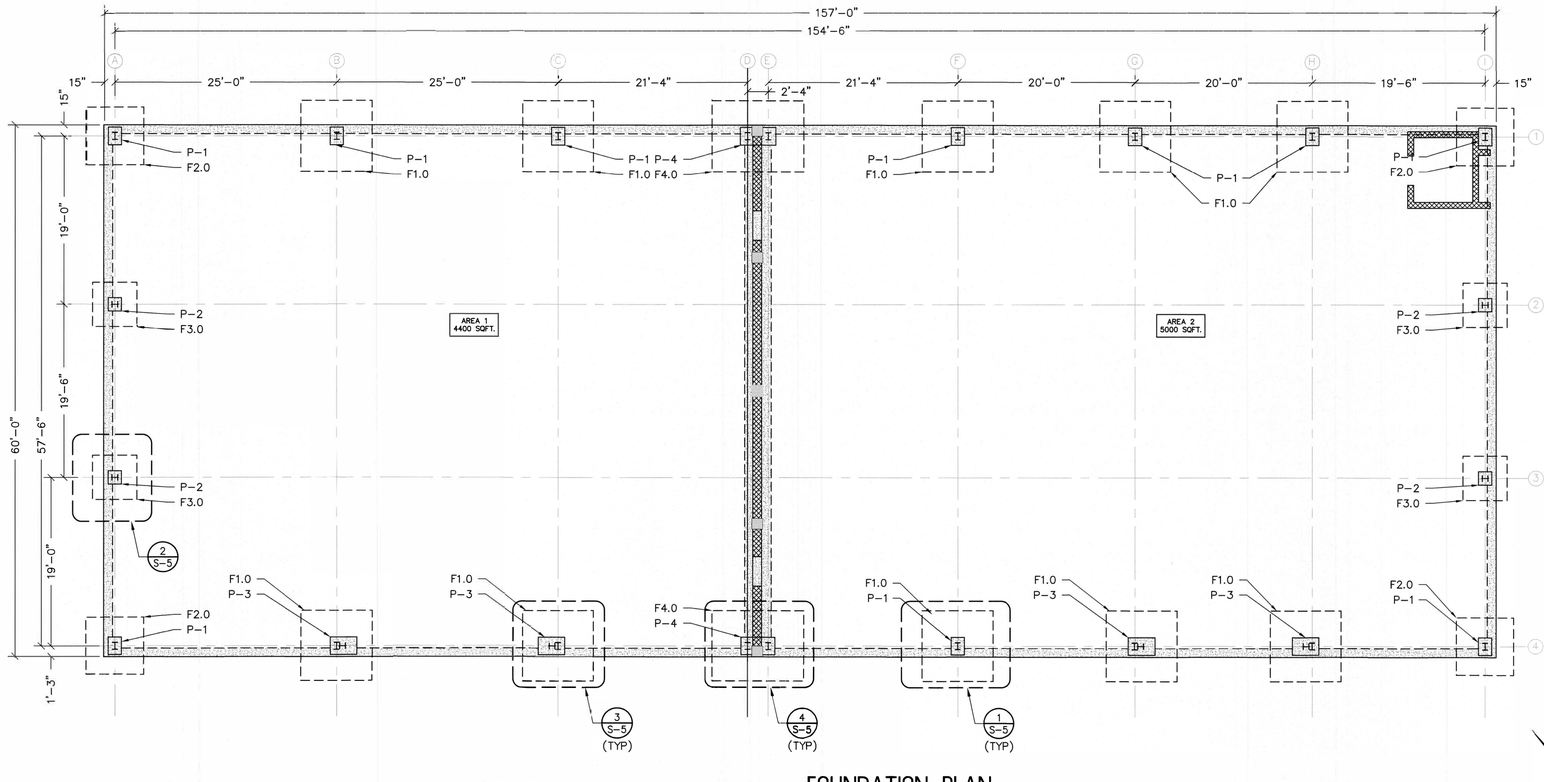

FOUNDATION PLAN

SCALE: 1/8"=1'

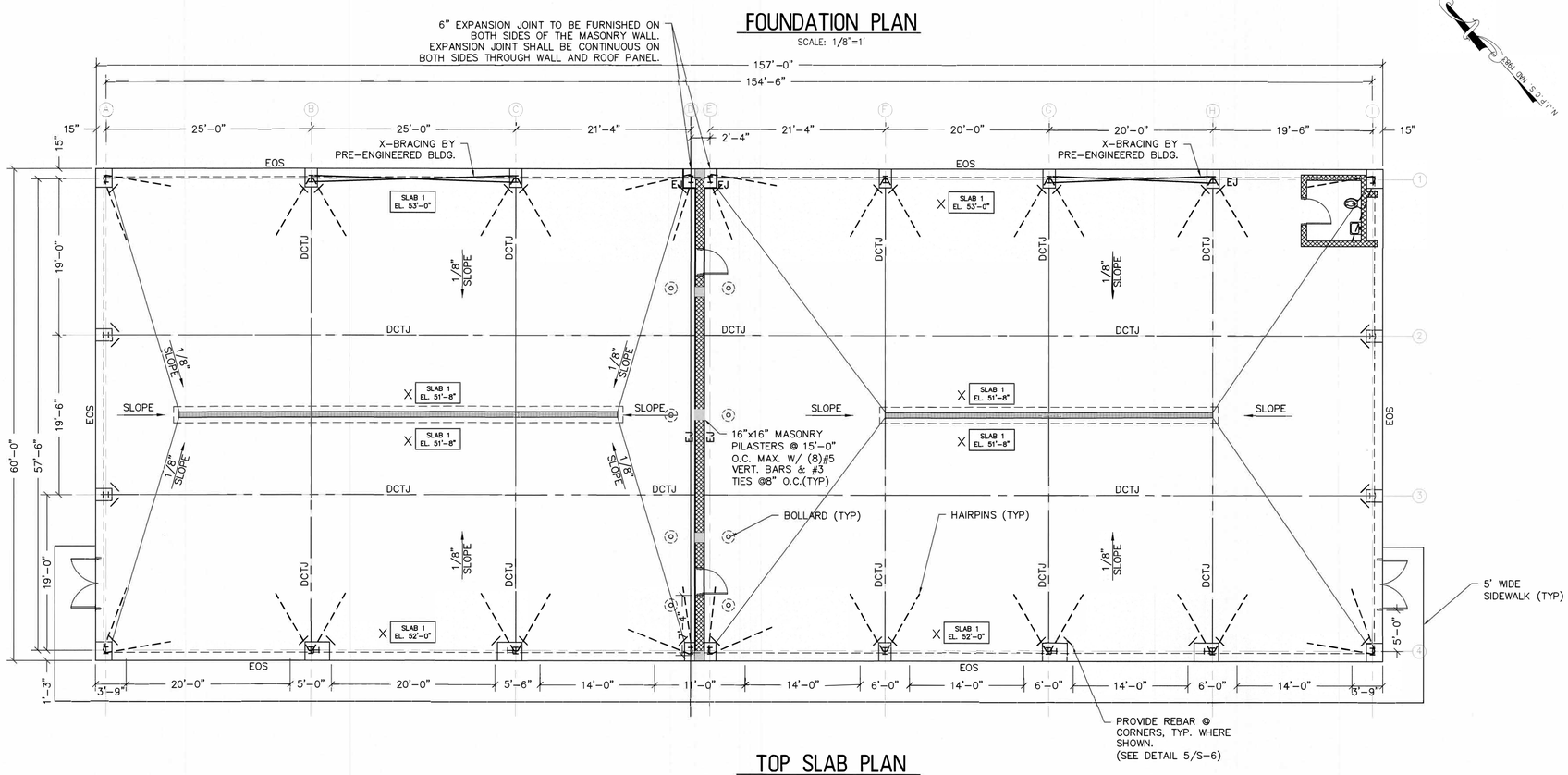

TOP SLAB PLAN

SCALE: 1/8"=1'

COLUMN FOOTING SCHEDULE
F1.0
8'x8' x18" THICK W/(8)#6 @12" O.C. E.W. T&B
F2.0
6'x6' x18" THICK W/(7)#6 @12" O.C. E.W. T&B
F3.0
5'x5' x12" THICK W/(5)#5 E.W. T&B
F40
10'-4"x8' x18" THICK W/#6@12"O.C., E.W., T&B

SLAB ON GRADE SCHEDULE
SLAB-1 *
10" THICK S.O.G. W/#5@12" O.C. E.W., ON 10 MIL VAPOR BARRIER AND 8" CRUSHED STONE

LEGEND

EXPANSION JOINT= EJ

DOWELED CONTROL JOINT= DCTJ

0' 4' 8' 16'

1/8" = 1'-0"

RVE 1901
REMINGTON & VERNICK ENGINEERS
2059 SPRINGDALE ROAD
CHERRY HILL, NJ 08003
(856) 795-9595, FAX (856) 795-1882
WEB ADDRESS : RVE.COM
Certification of Authorization: 24 GA 28003300
Excellence • Innovation • Service

DATE: 01-15-2025
DENNIS K. YODER
NJ PROFESSIONAL ENGINEER LIC. No. 31866

DATE: 01-15-2025
KENNETH C. RESSLER
NJ PROFESSIONAL ENGINEER LIC. No. 34559

PLANS WHICH DO NOT BEAR AN EMBOSSED SEAL ARE NOT VALID.

No.	REVISION	DATE	BY	CHK
3	PER ELSA INHOUSE REVIEW	12.24	JG	AK
2	PER ELSA FINAL COMMENTS	11.24	JG	AK
1	PER ELSA PRE REVIEW COMMENTS	06.03.24	JG	AK

FOUNDATION & TOP SLAB PLANS

EWING LAWRANCE SEWAGE AUTHORITY

ELSA VEHICLE STORAGE BUILDING

TOWNSHIP OF LAWRENCE — MERCER COUNTY — NEW JERSEY

DRAWN BY:	DESIGN BY:	CHECKED BY:	SCALE:
J.G.	A.K.	K.C.R.	AS NOTED

DATE: 5.16.2024

JOB No.: 1102M026

SHEET No.: S-2

P:\CADD Projects\Mercer Co\Ewing Lawrence Sewerage Authority\1102M026 Phillipsburg Industrial Park\S-Foor Plans.dwg 11/15/2025 9:34:24 AM

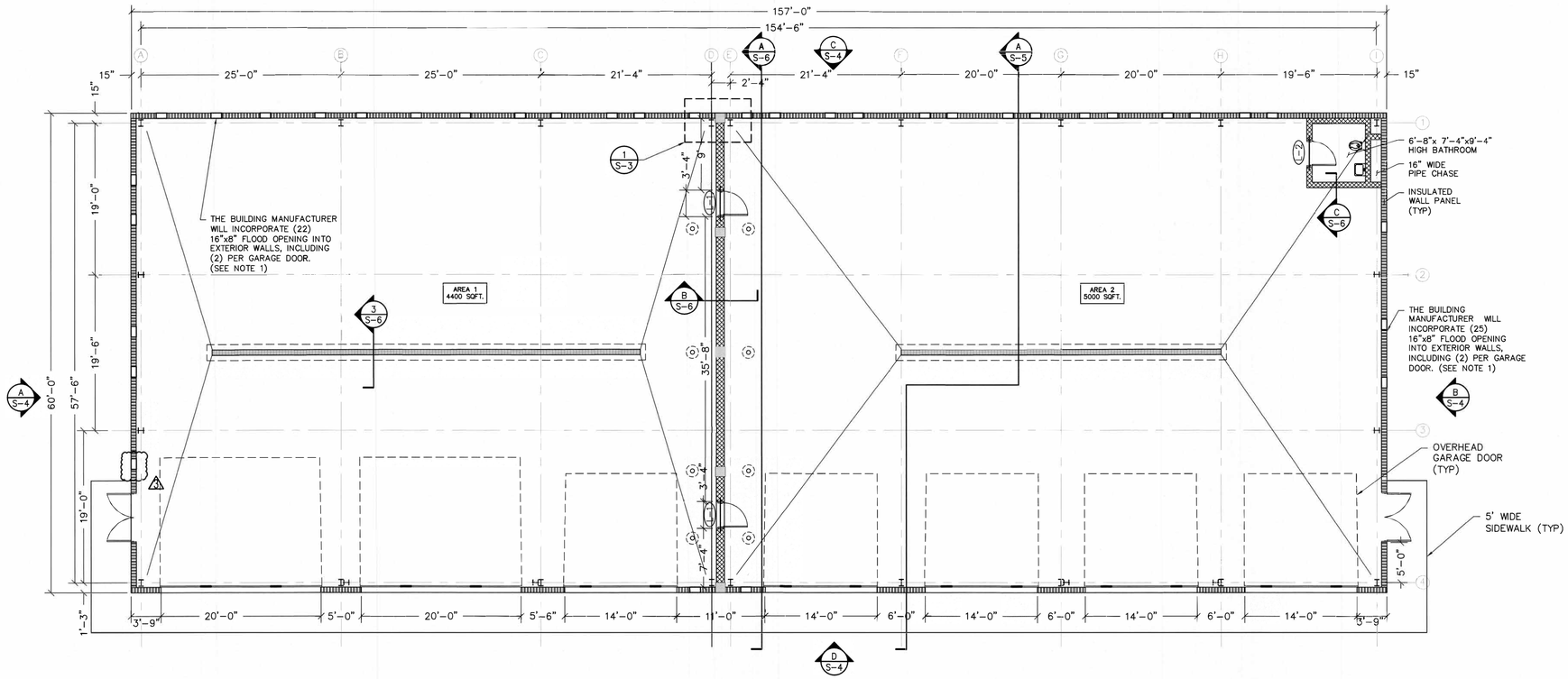

FLOOR PLAN

SCALE: 1/8"=1'

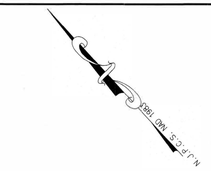

LINTEL SCHEDULE

L-1
12"X8" PRECAST U-LINTEL MANUFACTURED BY YORK BUILDING PRODUCTS (OR APPROVED EQUAL)

NOTE:

1. GROUT CELLS SOLID W/PEA GRAVEL CONCRETE FOR FULL WALL HEIGHT UNDER LINTEL FOR 8" BEARING LENGTH.

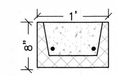

L-1

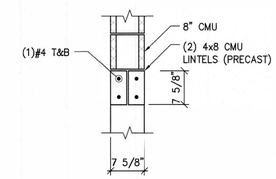

L-2

NOTE:

1. INSULATED FLOOD VENTS MANUFACTURED BY SMART VENT (OR APPROVED EQUAL) ARE TO BE RATED FOR 200 SQUARE FEET OF FLOOD AREA, AND ARE TO BE INSTALLED PER MANUFACTURER REQUIREMENTS. ALL FLOOD VENT PENETRATIONS SHALL BE PROPERLY SEALED TO PROTECT INSULATED WALL PANELS.

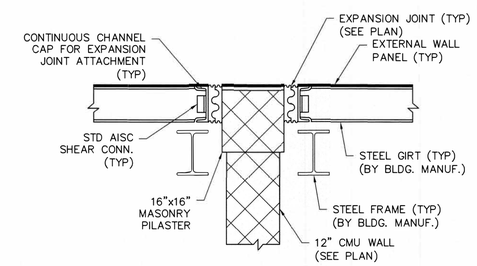

1/S-3 EXPANSION JOINT DETAIL

N.T.S.

0' 4' 8' 16'

1/8" = 1'-0"

RVE 1901
REMINGTON & VERNICK ENGINEERS
2059 SPRINGDALE ROAD
CHERRY HILL, NJ 08003
(856) 795-9595, FAX (856) 795-1882
WEB ADDRESS : RVE.COM
Certification of Authorization: 24 GA 28003300
Excellence • Innovation • Service

DATE: 01-15-2025
DENNIS K. YODER
NJ PROFESSIONAL ENGINEER LIC. No. 31866

DATE: 01-15-2025
KENNETH C. RESSLER
NJ PROFESSIONAL ENGINEER LIC. No. 34559

No.	REVISION	DATE	BY	CHK
3	PER ELSA INHOUSE REVIEW	12.24	JG	AK
2	PER ELSA FINAL COMMENTS	11.24	JG	AK
1	PER ELSA PRE REVIEW COMMENTS	06.03.24	JG	AK

BUILDING FLOOR PLAN

EWING LAWRANCE SEWAGE AUTHORITY

ELSA VEHICLE STORAGE BUILDING

TOWNSHIP OF LAWRENCE MERCER COUNTY NEW JERSEY

DRAWN BY :	DESIGN BY :	CHECKED BY :	SCALE :
J.G.	A.K.	K.C.R.	AS NOTED
DATE : 5.16.2024		SHEET No. : S-3	
JOB No. : 1102M026			

P:\ACAD Projects\Master Civil\ewing Lawrence Sewerage Authority\1102M026 PhillipBurg\Structural Plans\Floor Plans.dwg 1/15/2025 9:34:27 AM

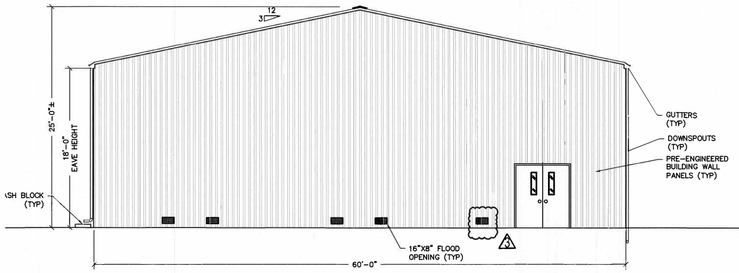

A S-4 EXTERIOR ELEVATION
SCALE: 1/8"=1'

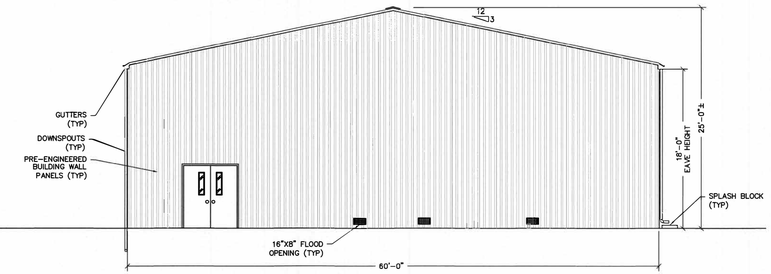

B S-4 EXTERIOR ELEVATION
SCALE: 1/8"=1'

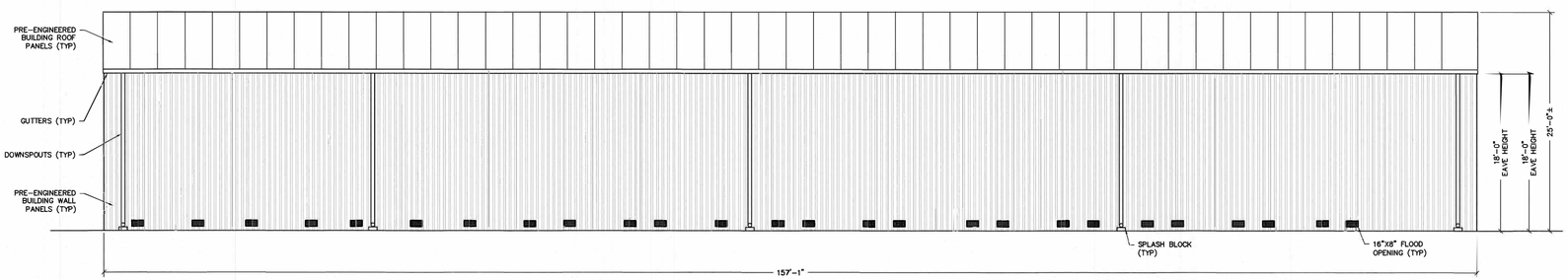

C S-4 EXTERIOR ELEVATION
SCALE: 1/8"=1'

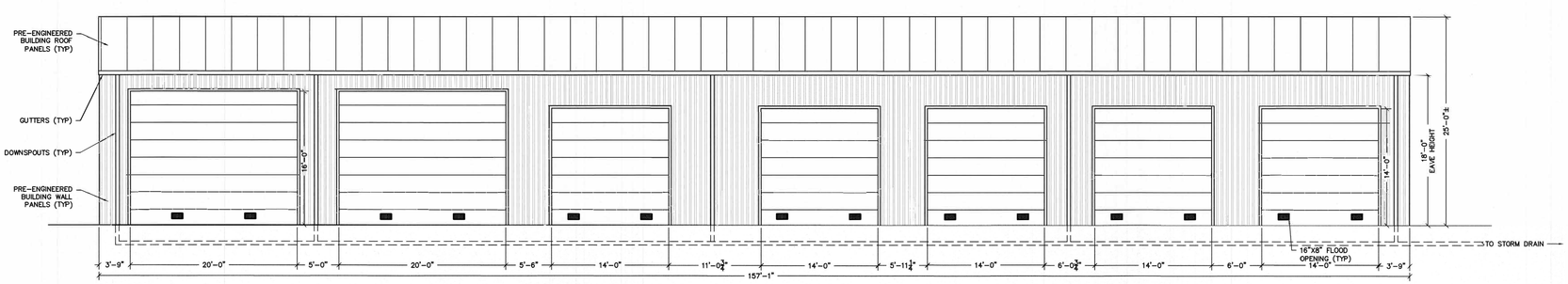

D S-4 EXTERIOR ELEVATION
SCALE: 1/8"=1'

0' 4' 8' 16'
1/8" = 1'-0"

RVE 1901
REMINGTON & VERNICK **ENGINEERS**
2059 SPRINGDALE ROAD
CHERRY HILL, NJ 08003
(856) 795-9595, FAX (856) 795-1882
WEB ADDRESS : RVE.COM
Certification of Authorization: 24 GA 28003300
Excellence • Innovation • Service

DATE: 01-15-2025
DENNIS K. YODER
NJ PROFESSIONAL ENGINEER LIC. No. 31866

DATE: 01-15-2025
KENNETH C. RESSLER
NJ PROFESSIONAL ENGINEER LIC. No. 34559

PLANS WHICH DO NOT BEAR AN EMBOSSED SEAL ARE NOT VALID.

No.	REVISION	DATE	BY	CHK
3	PER ELSA INHOUSE REVIEW	12.24	JG	AK
2	PER ELSA FINAL COMMENTS	11.24	JG	AK
1	PER ELSA PRE REVIEW COMMENTS	06.03.24	JG	AK

EXTERIOR ELEVATIONS

EWING LAWRANCE SEWAGE AUTHORITY
ELSA VEHICLE STORAGE BUILDING
TOWNSHIP OF LAWRENCE MERCER COUNTY NEW JERSEY

DRAWN BY :	DESIGN BY :	CHECKED BY :	SCALE :
J.G.	A.K.	K.C.R.	AS NOTED
DATE : 5.16.2024		SHEET No. : S-4	
JOB No. : 1102M026			

P:\CADD Projects\Mercer Co\Ewing Lawrence Sewerage Authority\1102M026 PVB\building\Structure Plans\S-Floor Plans.dwg 1/15/2025 9:34:32 AM

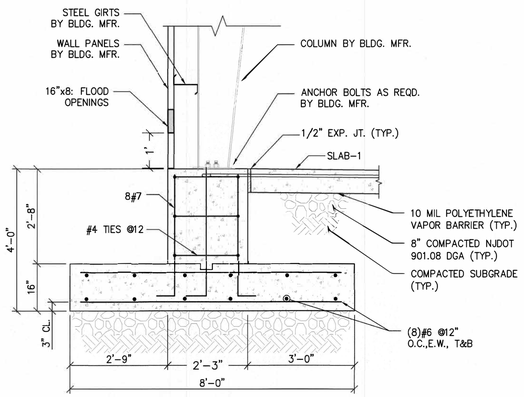

B S-5 SECTION
SCALE: 1/2"=1'

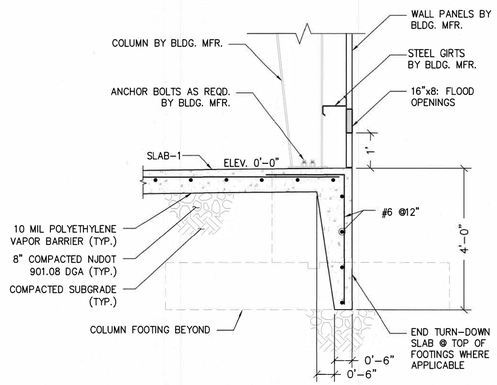

C S-5 SECTION
SCALE: 1/2"=1'

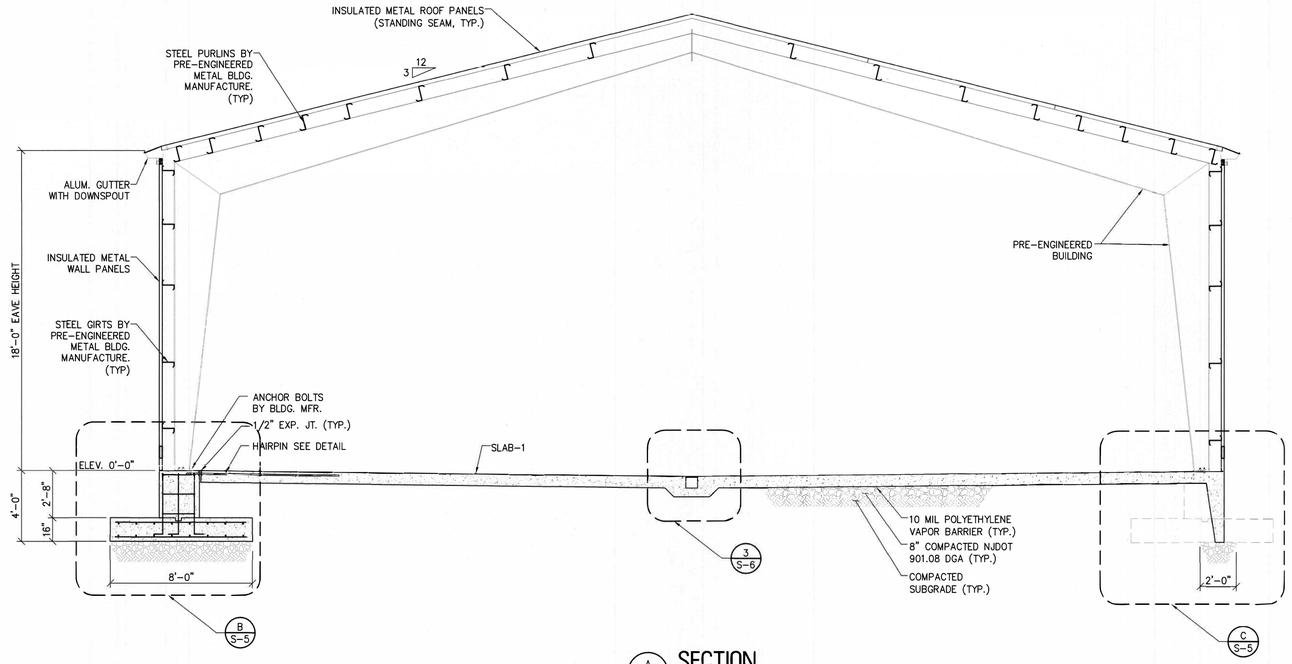

A S-5 SECTION
SCALE: 1/4"=1'

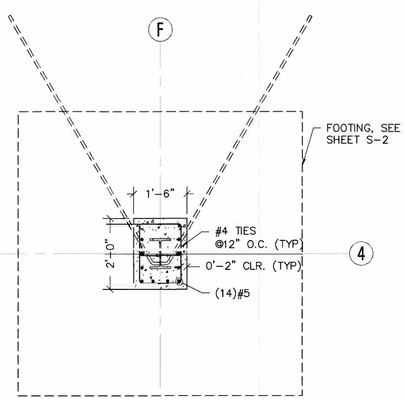

1 S-5 DETAIL- P-1
SCALE: 1/2"=1'

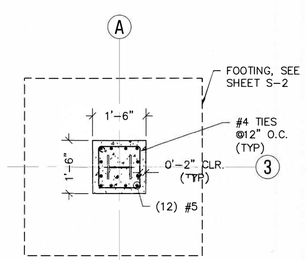

2 S-5 DETAIL- P-2
SCALE: 1/2"=1'

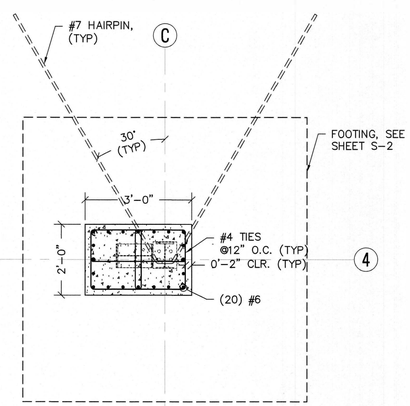

3 S-5 DETAIL- P-3
SCALE: 1/2"=1'

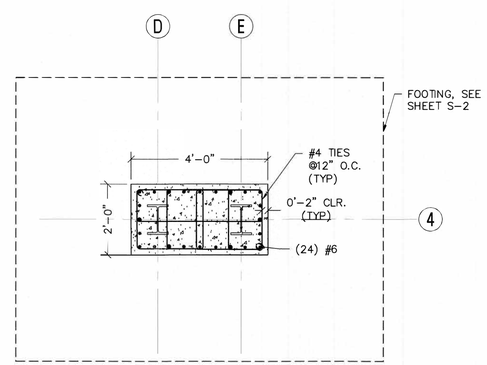

4 S-5 DETAIL- P-4
SCALE: 1/2"=1'

RVE 1901
REMINGTON & VERNICK ENGINEERS
2059 SPRINGDALE ROAD
CHERRY HILL, NJ 08003
(856) 795-9595, FAX (856) 795-1882
WEB ADDRESS : RVE.COM
Certification of Authorization: 24 GA 28003300
Excellence • Innovation • Service

DATE: 01-15-2025
DENNIS K. YODER
NJ PROFESSIONAL ENGINEER LIC. No. 31866

DATE: 01-15-2025
KENNETH C. RESSLER
NJ PROFESSIONAL ENGINEER LIC. No. 34559

No.	REVISION	DATE	BY	CHK
3	PER ELSA INHOUSE REVIEW	12.24	JG	AK
2	PER ELSA FINAL COMMENTS	11.24	JG	AK
1	PER ELSA PRE REVIEW COMMENTS	06.03.24	JG	AK

STRUCTURAL SECTIONS AND DETAILS

EWING LAWRENCE SEWAGE AUTHORITY

ELSA VEHICLE STORAGE BUILDING

TOWNSHIP OF LAWRENCE — MERCER COUNTY — NEW JERSEY

DRAWN BY :	DESIGN BY :	CHECKED BY :	SCALE :
J.G.	A.K.	K.C.R.	AS NOTED

DATE : 5.16.2024

JOB No. : 1102M026

SHEET No. : S-5

P:\CADD Projects\N J Mercer Co\Ewing Lawrence Sewerage Authority\1102M026 PWBuilding\Structural Plans\S-Foor Plans.dwg 1/15/2025 9:34:39 AM

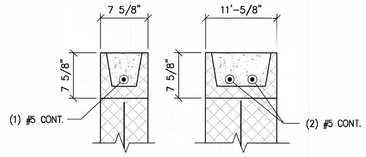

BOND BEAM DETAILS (4 / S-6)
N.T.S.

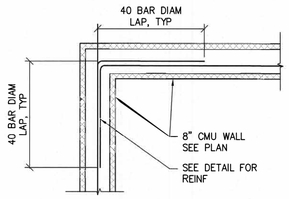

8" CMU CORNER DETAIL
N.T.S.

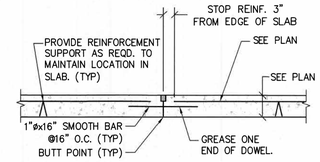

(1 / S-6) DOWELED SLAB CONSTRUCTION JOINT
N.T.S.

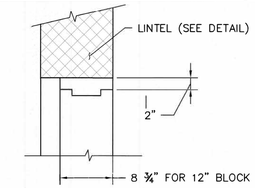

TYPICAL DOOR HEAD DETAIL
N.T.S.

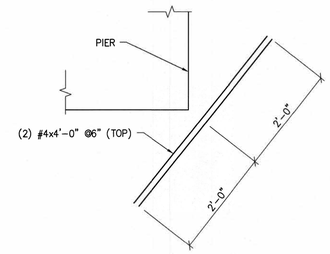

REBAR @ CORNERS DETAIL (5 / S-6)
N.T.S.

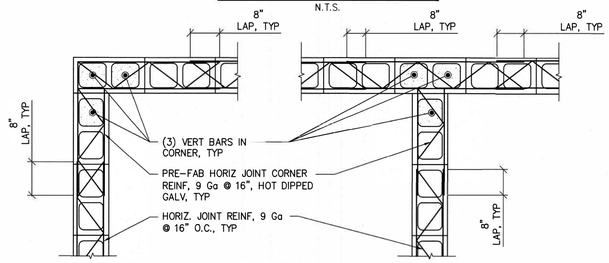

TYPICAL CMU CONTRACTION JOINT DETAIL
N.T.S.

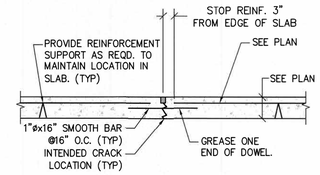

(2 / S-6) DOWELED SLAB CONTROL JOINT
N.T.S.

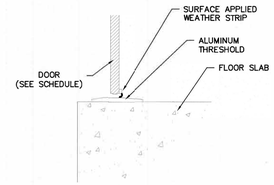

DOOR THRESHOLD DETAIL
N.T.S.

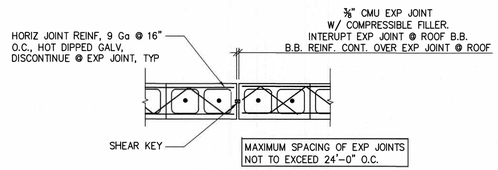

TYPICAL CMU CONTRACTION JOINT DETAIL
N.T.S.

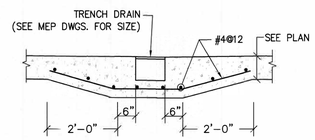

(3 / S-6) TRENCH DRAIN DETAIL
N.T.S.

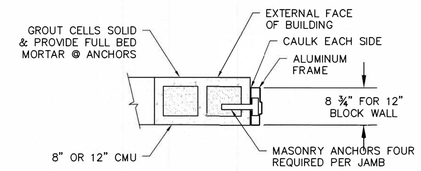

TYPICAL DOOR JAMB DETAIL
N.T.S.

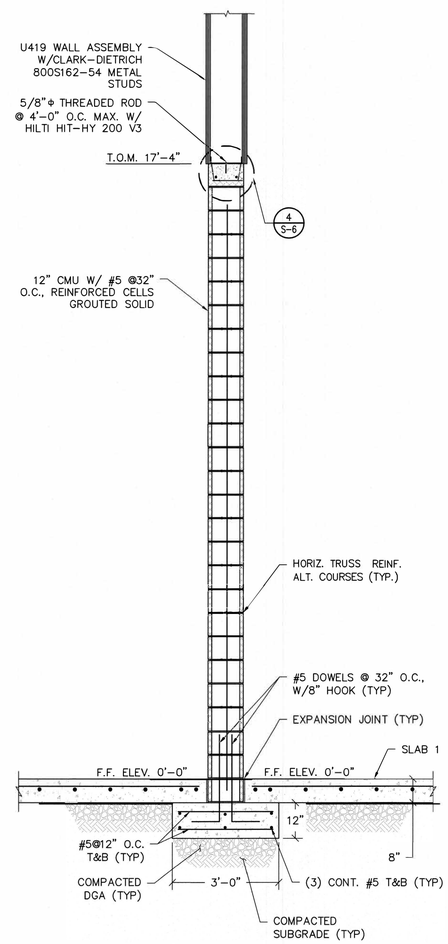

(B / S-6) SECTION
SCALE: 1/2"=1'

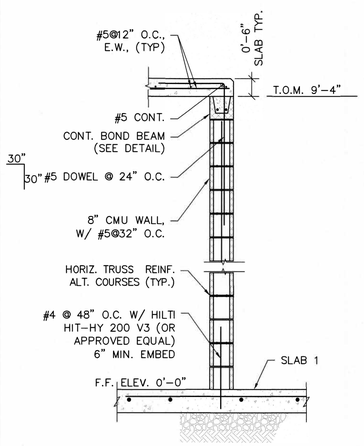

(C / S-6) SECTION
SCALE: 1/2"=1'

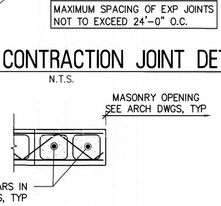

TYPICAL CMU REINF. @ MASONRY OPENING DETAIL
N.T.S.

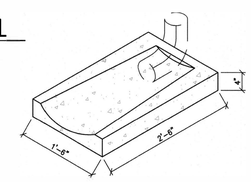

CONCRETE SPLASH PAD DETAIL
N.T.S.

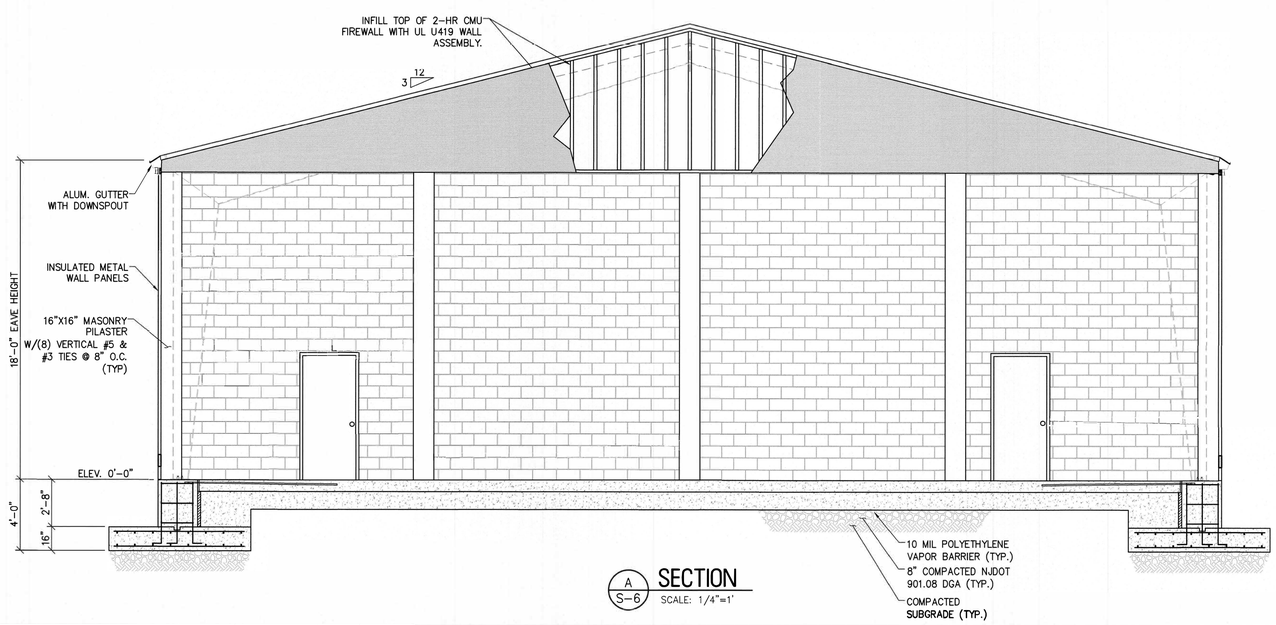

(A / S-6) SECTION
SCALE: 1/4"=1'

RVE 1901
REMINGTON & VERNICK ENGINEERS
2059 SPRINGDALE ROAD
CHERRY HILL, NJ 08003
(856) 795-9595, FAX (856) 795-1882
WEB ADDRESS : RVE.COM
Certification of Authorization: 24 GA 28003300
Excellence • Innovation • Service

DATE: 01-15-2025
DENNIS K. YODER
NJ PROFESSIONAL ENGINEER LIC. No. 31866

DATE: 01-15-2025
KENNETH C. RESSLER
NJ PROFESSIONAL ENGINEER LIC. No. 34559

No.	REVISION	DATE	BY	CHK
3	PER ELSA INHOUSE REVIEW	12.24	JC	AK
2	PER ELSA FINAL COMMENTS	11.24	JC	AK
1	PER ELSA PRE REVIEW COMMENTS	06.03.24	JC	AK

STRUCTURAL SECTIONS AND DETAILS

EWING LAWRANCE SEWAGE AUTHORITY
ELSA VEHICLE STORAGE BUILDING
TOWNSHIP OF LAWRENCE — MERCER COUNTY — NEW JERSEY

DRAWN BY:	DESIGN BY:	CHECKED BY:	SCALE:
J.G.	A.K.	K.C.R.	AS NOTED
DATE: 5.16.2024		SHEET No.:	
JOB No.: 1102M026		S-6	

P:\CADD Projects\Master Cd\Ewing Lawrence Sewerage Authority\1102M026 PW\building\Structural Plans\Floor Plans.dwg 1/15/2025 3:34:45 AM

GENERAL NOTES

(ALL GENERAL NOTES, SYMBOLS & ABBREVIATIONS MAY NOT BE USED ON THIS PROJECT)

1. EXAMINE JOB SITE AND VERIFY ALL SITE CONDITIONS PRIOR TO SIGNING CONTRACT. BRING ANY DISCREPANCY BETWEEN THE CONTRACT DOCUMENTS AND THE ACTUAL FIELD CONDITIONS TO THE ATTENTION OF THE ARCHITECT/ENGINEER.
2. THE LOCATION OF EXISTING UTILITIES IS SHOWN IN AN APPROXIMATE WAY ONLY. THE CONTRACTOR SHALL DETERMINE THE EXACT LOCATION OF ALL EXISTING UTILITIES BEFORE COMMENCING WORK. THE CONTRACTOR SHALL PAY FOR AND REPAIR ALL DAMAGES CAUSED BY FAILURE TO EXACTLY LOCATE AND PRESERVE ANY AND ALL UTILITIES UNLESS OTHERWISE INDICATED.
3. THE DRAWINGS ARE DIAGRAMMATIC. COORDINATE IN THE FIELD, WITH THE ARCHITECT AND WITH ALL TRADES, THE EXACT LOCATION OF EQUIPMENT, FIXTURES, VALVES, THERMOSTATS, ETC. AND ROUTING OF PIPING, DUCTWORK, CONDUIT, ETC.
4. PERFORM WORK IN ACCORDANCE WITH RULES, REGULATIONS, STANDARDS, CODES, ORDINANCES, AND LAWS OF LOCAL, STATE AND FEDERAL GOVERNMENTS AND OTHER AUTHORITIES HAVING JURISDICTION AND BE RESPONSIBLE FOR COMPLIANCE THEREWITH.
5. OBTAIN ALL NECESSARY APPROVALS, PERMITS AND INSPECTIONS. PAY ALL ASSOCIATED FEES.
6. GUARANTEE ALL SYSTEMS AND WORK FOR A PERIOD OF ONE (1) YEAR FROM DATE OF FINAL ACCEPTANCE. GUARANTEE REFRIGERATION COMPRESSORS FOR FIVE (5) YEARS.
7. BEFORE STARTING FABRICATION/ WORK SUBMIT TO ARCHITECT/ENGINEER FOR APPROVAL SIX (6) COMPLETE SETS OF SHOP DRAWINGS AND PRODUCT DATA FROM MANUFACTURERS, SUPPLIERS, ETC.
8. ALL MATERIALS SHALL BE NEW AND OF COMMERCIAL GRADE AND BEAR THE UNDERWRITER'S LABEL WHERE APPLICABLE.
9. LOCATE ALL EXISTING UTILITIES AND MAKE SERVICEABLE CONNECTIONS TO SAME.
10. OBTAIN APPROVAL FROM THE BUILDING OWNER'S REPRESENTATIVE PRIOR TO ANY INTERRUPTION OF BUILDING OR PROCESS SYSTEMS. COORDINATE ACCEPTABLE WORKING HOURS WITH SAME.
11. REMOVE ALL ABANDONED EQUIPMENT, FIXTURES, DUCTWORK, PIPING, CONDUIT, ETC. CAP ALL PIPING ABANDONED IN WALLS.
12. ALL CUTTING AND PATCHING IS BY RESPECTIVE CONTRACTORS. CORE DRILL OR SAW CUT ALL MASONRY AND RESTORE ALL SURFACES TO ORIGINAL CONDITION. PAINTING AND FINISHING ARE BY THE GENERAL CONTRACTOR.
13. PIPING AND SPECIALTIES
    a. ALL PIPING SHALL CONFORM TO THE REQUIREMENTS OF THE ANSI SAFETY CODE AND BE FREE FROM ALL DEFECTS.
    b. PROVIDE SLEEVES FOR PIPING THROUGH MASONRY, FIRE RATED WALLS AND SMOKE PARTITIONS. SLEEVES SHALL BE 22 GAUGE OR HEAVIER STEEL, SCHEDULE 40 IN BEARING WALLS. SIZE SLEEVES TO ACCOMMODATE PIPE INSULATION WHERE APPLICABLE. PROVIDE UL LISTINGS FOR SLEEVE PACKING.
    c. PROVIDE PIPE HANGERS TO SUPPORT PIPING FROM BUILDING STRUCTURE TO MAINTAIN REQUIRED SLOPE, PROVIDE FOR EXPANSION AND CONTRACTION, ISOLATE VIBRATION AND RELIEVE EQUIPMENT AND SPECIALTIES FROM STRAIN. SPACE HANGERS ACCORDING TO APPLICABLE CODES AND MANUFACTURER'S RECOMMENDATIONS.
    d. IDENTIFY ALL PIPING WITH SEMIRIGID OR ADHESIVE PLASTIC INDICATION MARKERS, EXCEPT WITHIN INACCESSIBLE CHASES. MARKERS SHALL SHOW DIRECTION OF FLOW. MARKERS SHALL BE LOCATED NEXT TO EACH VALVE, AT EACH BRANCH, ON BOTH SIDES OF PIPE PASSAGE THROUGH WALLS AND ON ALL HORIZONTAL PIPING AT 20' MAXIMUM INTERVALS.
    e. ROUTE ALL PIPING CONCEALED IN WALLS, ABOVE CEILING AND BELOW FLOOR UNLESS OTHERWISE NOTED. RUN PARALLEL WITH BUILDING LINES.
    f. PROVIDE DRAIN VALVES & PLUGS AT ALL LOW POINTS SUCH THAT PIPING SYSTEMS CAN BE DRAINED. PROVIDE MANUAL AIR VENT VALVES AT ALL HIGH POINTS IN THE SYSTEM.
    g. PROVIDE BACKFLOW PREVENTION DEVICES AT ALL EQUIPMENT AS REQUIRED BY CODE. UNLESS STATED OTHERWISE PROVIDE CHECK VALVE AND SHUT-OFF VALVE BOTH RATED FOR 250°F DOWN STREAM OF BACKFLOW PREVENTER ON MAKE UP WATER LINE FOR HYDRONIC HEATING HOT WATER SYSTEMS.
    h. PROVIDE DIELECTRIC UNIONS AT ALL JUNCTIONS OF DISSIMILAR METALS.
    i. ALL SHUTOFF VALVES, CONTROL VALVES, ETC. ARE FULL LINE SIZE UNLESS OTHERWISE NOTED.
    j. INSTALL PIPING ON WARM SIDE OF BUILDING INSULATION. DO NOT INSTALL PIPING WHERE SUBJECT TO FREEZING.
    k. ALL PIPING INSULATION SHALL BE CONTINUOUS THROUGH WALLS AND CEILING OPENINGS, SLEEVES AND PIPE HANGERS.
    l. TEST ALL PIPING IN ACCORDANCE WITH APPLICABLE CODES, STANDARDS, AND INSPECTOR'S REQUIREMENTS PRIOR TO INSULATION OR ENCLOSING.
    m. BALANCE ALL HYDRONIC DEVICES FOR FLOW RATES NOTED ON DRAWINGS. PROVIDE BALANCING REPORT TO ARCHITECT/ENGINEER.
    n. UNLESS STATED OTHERWISE IN THE CONTRACT SPECIFICATIONS, PROVIDE A MINIMUM OF ONE (1) ONE AND A HALF (1-1/2') INCH THICK LAYER OF PREFORMED MINERAL FIBER PIPE INSULATION WITH PREFORMED MINERAL FIBER FITTINGS ON ALL DOMESTIC HOT AND COLD WATER PIPING, HYDRONIC HEATING AND CHILLED WATER SUPPLY AND RETURN PIPING, REFRIGERANT PIPING AND CONDENSATE DRAIN PIPING. INCLUDE A FIELD APPLIED FOIL AND PVC JACKET WITH VAPOR RETARDER AS PART OF THE INSULATION ASSEMBLY.
    o. UNLESS STATED OTHERWISE ALL UNDERGROUND PIPING SHALL BE INSTALLED WITH POLYETHYLENE ENCASEMENT (PE) FOR CORROSION RESISTANCE.
    p. UNLESS STATED OTHERWISE ALL FUEL GAS VENT PIPING TO BE SA-53GrB CARBON STEEL. ALL VENT PIPING TO BE PRIMED AND FINISH PAINTED IN A COLOR ACCEPTABLE TO THE OWNER.
14. DUCTWORK AND SPECIALTIES
    a. ALL DUCTWORK TO BE IN ACCORDANCE WITH S.M.A.C.N.A. "H.V.A.C. DUCT CONSTRUCTION STANDARDS", LATEST EDITION. PRESSURE CLASS "B".
    b. ALL DUCTWORK TO BE CONSTRUCTED OF GALVANIZED SHEETMETAL.
    c. PROVIDE 45 DEGREE COLLARS TO ALL BRANCH CONNECTIONS. PROVIDE TURNING VANES AT ALL ELBOWS 12"x6" OR LARGER. PROVIDE STANDARD RADIUS ELBOWS AT ALL ELBOWS SMALLER THAN 12"x6".
    d. PROVIDE ALL VOLUME DAMPERS REQUIRED TO BALANCE THE SYSTEMS. INSTALL VOLUME DAMPERS AT BRANCH TAKE-OFFS FROM TRUNK.
    e. PROVIDE CURTAIN TYPE FIRE DAMPERS WHEREVER DUCT PENETRATES FIRE RATED PARTITIONS. UNITS SHALL PROVIDE NOT LESS THAN 90% FREE AREA. PROVIDE ACCESS DOORS AT ALL FIRE DAMPERS.
    f. TEST DUCT SYSTEMS FOR AIR TIGHTNESS AND ABSENCE OF AUDIBLE LEAKS BEFORE ENCLOSURE.
    g. BALANCE ALL AIR DEVICES FOR AIR QUANTITIES NOTED ON DRAWINGS. PROVIDE BALANCING REPORT TO ARCHITECT/ENGINEER.
    h. FLEXIBLE DUCTS: ALL FLEXIBLE DUCTS SHALL BE IN COMPLIANCE WITH THE LATEST EDITION OF THE INTERNATIONAL MECHANICAL CODE.
    i. COORDINATE ALL EQUIPMENT CONNECTIONS WITH MANUFACTURER'S CERTIFIED DRAWINGS. COORDINATE AND PROVIDE ALL PIPING TRANSITIONS REQUIRED FOR FINAL EQUIPMENT CONNECTIONS TO FURNISHED EQUIPMENT. FIELD VERIFY AND COORDINATE ALL DUCT AND PIPING DIMENSIONS BEFORE FABRICATION.
    j. PROVIDE FIRE DAMPERS IN THE DUCTWORK IN ACCORDANCE WITH ALL APPLICABLE CODES AND THE CONTRACT DOCUMENTS.
    k. UNLESS STATED OTHERWISE IN THE CONTRACT SPECIFICATIONS, PROVIDE A MINIMUM OF ONE (1) TWO AND ONE HALF (2-1/2') INCH THICK LAYER OF MINERAL FIBER BLANKET INSULATION ON ALL NEW INDOOR ROUND AND RECTANGULAR SUPPLY AIR, EXHAUST AIR, RETURN AIR AND OUTDOOR AIR DUCTWORK. INCLUDE A FIELD APPLIED PAPER AND FOIL JACKET WITH VAPOR RETARDER AS PART OF THE INSULATION ASSEMBLY.
    l. UNLESS STATED OTHERWISE IN THE CONTRACT SPECIFICATIONS, PROVIDE A MINIMUM OF ONE (1) TWO (2') INCH THICK LAYER OF MINERAL FIBER BOARD INSULATION ON ALL NEW OUTDOOR ROUND AND RECTANGULAR SUPPLY AIR, EXHAUST AIR, RETURN AIR AND OUTDOOR AIR DUCTWORK. INCLUDE A WEATHERPROOF FIELD APPLIED 22 GAUGE ALUMINUM JACKET WITH VAPOR RETARDER AS PART OF THE INSULATION ASSEMBLY. COORDINATE FINISH COLOR OF EXTERIOR JACKET WITH THE OWNER.
    m. UNLESS OTHERWISE NOTED ALL EXPOSED SUPPLY, RETURN AND EXHAUST AIR DUCTWORK SHALL BE PRIMED AND PAINTED. COLOR TO BE DETERMINED BY THE ENGINEER/ OWNER.
15. EQUIPMENT
    a. VERIFY ALL ELECTRICAL CHARACTERISTICS WITH ELECTRICAL CONTRACTOR BEFORE ORDERING EQUIPMENT.
    b. ALL MECHANICAL EQUIPMENT AND APPLIANCE INSTALLATIONS SHALL BE IN COMPLIANCE WITH THE LATEST EDITION OF THE INTERNATIONAL MECHANICAL CODE, AS WELL AS WITH MANUFACTURER'S RECOMMENDATIONS,
    c. ALL ELECTRICAL POWER WIRING IS BY ELECTRICAL CONTRACTOR. ALL CONTROL WIRING IS BY RESPECTIVE CONTRACTOR.
    d. PROVIDE OWNER WITH OPERATION AND MAINTENANCE MANUALS FOR INSTALLED EQUIPMENT. INCLUDE CONTRACTOR'S, SUPPLIER'S AND MANUFACTURER'S NAMES, ADDRESS AND TELEPHONE NUMBERS.
    e. SUPPLY STARTERS AND DISCONNECTS WITH EQUIPMENT.
    f. PROVIDE CONCRETE PADS FOR FLOOR MOUNTED EQUIPMENT. PADS SHALL BE A MINIMUM 4" HIGH AND SHALL EXTEND 6" BEYOND EQUIPMENT ON ALL SIDES.
    g. LABELING: ALL MECHANICAL EQUIPMENT AND APPLIANCES SHALL BEAR LABELING IN COMPLIANCE WITH THE LATEST VERSION OF THE INTERNATIONAL MECHANICAL CODE.
    h. UNLESS NOTED OTHERWISE, ALL HYDRONIC SYSTEMS BOILER/ CHILLED WATER SHALL BE PROVIDED WITH A NEW BLADDER TYPE EXPANSION TANK AS REQUIRED. TANK TO BE SIZED FOR EACH SYSTEM BASED UPON TANK MANUFACTURER'S RECOMMENDATIONS.
    i. UNLESS OTHERWISE NOTED CONTRACTOR IS RESPONSIBLE TO FURNISH AND INSTALL PROPYLENE GLYCOL ANTI FREEZE FOR ALL HYDRONIC HEATING AND COOLING SYSTEMS. THE CONTRACTOR SHALL SUPPLY A 35% CONCENTRATION OF PROPYLENE GLYCOL IN SOLUTION FOR CHILLED WATER COOLING SYSTEMS AND A 25% CONCENTRATION OF PROPYLENE GLYCOL IN SOLUTION FOR HOT WATER HEATING SYSTEMS. PROPYLENE GLYCOL ANTI FREEZE SHALL BE COMPATIBLE WITH ALL MATERIALS OF THE HYDRONIC SYSTEM (PIPING, VALVES, PUMPS, CHILLER, BOILER, ETC.) AS WELL AS ALL TERMINAL EQUIPMENT.
16. AUTOMATIC TEMPERATURE AND SAFETY CONTROLS
    a. PROVIDE ALL WIRING, RELAYS, CONTACTS, TRANSFORMERS, ETC. REQUIRED TO DELIVER A COMPLETE OPERABLE SYSTEM. MINIMUM CONDUIT SIZE SHALL BE 3/4 RIGID.
    b. THERMOSTATS SHALL BE 24 HOUR/7 DAY PROGRAMMABLE WITH FAN "OFF/ON/AUTO" AND SYSTEM "HEAT/COOL/AUTO/OFF" SWITCHES. VERIFY OPERATION OF ALL FUNCTIONS.
17. FIRE PROTECTION
    a. THE QUANTITY AND LOCATION OF SPRINKLERS SHOWN ON THE DRAWINGS ARE APPROXIMATE AND INTENDED FOR SCHEMATIC PURPOSES ONLY. THE FIRE PROTECTION CONTRACTOR SHALL BE RESPONSIBLE FOR FURNISHING, INSTALLING AND COMMISSIONING ALL NECESSARY SPRINKLERS, PIPE, EQUIPMENT AND APPURTENANCES NECESSARY, IN FULL ACCORDANCE WITH THE NFPA AND APPROVED BY THE ENGINEER AND ALL AUTHORITIES HAVING JURISDICTION.
    b. THE FIRE PROTECTION CONTRACTOR SHALL PROVIDE DETAILED DESIGN DRAWINGS, HYDRAULIC CALCULATIONS, PIPING, FITTINGS, SPRINKLERS, ALARM AND MONITORING DEVICES, SIGNAGE AND APPURTENANCES COMPLETE AND IN FULL ACCORDANCE WITH ALL APPLICABLE BUILDING CODES AND NFPA 13 & 14. ALL WIRING OF DEVICES SHALL BE DONE BY ELECTRICAL CONTRACTOR.
    c. ALL SPRINKLER HEADS SHALL BE LOCATED AT THE CENTER POINT OF ALL ACOUSTICAL CEILING TILES.
18. ALL EXISTING PLUMBING, HVAC AND ELECTRICAL EQUIPMENT AND MATERIALS THAT ARE EITHER EXPOSED OR CONCEALED AND THAT INTERFERE WITH ALTERED EXISTING BUILDING ARRANGEMENTS AND NEW SYSTEMS SHALL BE REMOVED, RELOCATED, REROUTED, OR ABANDONED. DRAWINGS GENERALLY INDICATE MAJOR ITEMS OF EXISTING MATERIALS AND EQUIPMENT THAT ARE AFFECTED. IT IS NOT POSSIBLE TO INDICATE ALL RELATED ACCESSORIES, SPECIALTIES AND OTHER MINOR ITEMS; HOWEVER, THEIR REMOVAL, RELOCATION, REROUTING AND ABANDONMENT SHALL ALSO BE INCLUDED IN THIS WORK.
19. EXISTING CONCEALED PLUMBING, HVAC AND ELECTRICAL EQUIPMENT AND MATERIALS THAT ARE TO REMAIN BUT BECOME EXPOSED DUE TO RENOVATION WORK, SHALL BE RELOCATED AND RECONNECTED AS PART OF THIS WORK.
20. PLUMBING DRAWINGS ARE DIAGRAMMATIC. ALL DEVICES & FITTINGS MAY NOT BE SHOWN ON THE DRAWINGS FOR CLARITY. PROVIDE CLEANOUTS NEAR THE BASE OF ALL VERTICAL WASTE & STORM WATER STACKS IN ACCORDANCE WITH THE LATEST EDITION OF THE NATIONAL STANDARD PLUMBING CODE.
21. GUARDS SHALL BE PROVIDED WHERE APPLIANCES, EQUIPMENT, FANS OR OTHER COMPONENTS THAT REQUIRE SERVICE AND ROOF HATCH OPENINGS ARE LOCATED WITHIN 12 FEET OF A ROOF EDGE OR OPEN SIDE OF A WALKING SURFACE AND SUCH EDGE OR OPEN SIDE IS LOCATED MORE THEN 30 INCHES ABOVE THE FLOOR, ROOF OR GRADE BELOW. THE GUARD SHALL EXTEND NOT LESS THEN 30 INCHES BEYOND EACH END OF SUCH APPLIANCES, EQUIPMENT, FANS, COMPONENTS AND ROOF HATCH OPENINGS AND THE TOP OF THE GUARD SHALL BE LOCATED NOT LESS THEN 42 INCHES ABOVE THE ELEVATED SURFACE ADJACENT TO THE GUARD. THE GUARD SHALL BE CONSTRUCTED SO AS TO PREVENT THE PASSAGE OF A 21 INCH-DIAMETER SPHERE AND SHALL COMPLY WITH THE LOADING REQUIREMENTS FOR GUARDS SPECIFIED IN THE LATEST EDITION OF THE INTERNATIONAL BUILDING CODE.
22. PROVIDE FOR ALL MECHANICAL EQUIPMENT – FAN AND MOTOR PULLEYS, SHEAVES, BELTS AND LABOR REQUIRED TO BALANCE THE NEW AND EXISTING MECHANICAL EQUIPMENT TO THE SPECIFIED SUPPLY, RETURN, EXHAUST AND OUTSIDE AIR FLOWS SHOWN ON THE CONTRACT DOCUMENTS AT NO ADDITIONAL COST TO THE OWNER. THE TESTING, ADJUSTING AND BALANCING CONTRACTOR SHALL BE RESPONSIBLE FOR PROVIDING ALL REQUIRED PULLEYS, SHEAVES AND BELTS EVEN IF THEY ARE NOT PROVIDED WITH THE EQUIPMENT BY THE MANUFACTURER.
23. UNLESS OTHERWISE NOTED CONTRACTOR IS RESPONSIBLE TO FURNISH AND INSTALL ALL CONNECTION/ TRANSITION DUCTS BETWEEN NEW HVAC EQUIPMENT (UNIT VENTILATORS, BLOWER COILS, FAN COILS, AIR HANDLERS, ETC.) AND NEW OR EXISTING OUTSIDE AIR LOUVERS. CONTRACTOR IS ALSO RESPONSIBLE FOR REINFORCING ANY OUTSIDE AIR LOUVER OPENING THAT IS CREATED OR ENLARGED TO ACCOMMODATE THE NEW INSTALLATION.
24. UNLESS SPECIFICALLY DIRECTED OTHERWISE THE CONTRACTOR SHALL SUBMIT PR-DEMOLITION/ PRE-CONSTRUCTION VIDEOS AND/ OR PHOTOGRAPHS OF THE EXISTING CONDITIONS IN THE PROPOSED AREA OF WORK TO THE ENGINEER FOR REVIEW PRIOR TO START OF DEMOLITION/ CONSTRUCTION WORK.

MECHANICAL ABBREVIATIONS

AD	ACCESS DOOR	LRG	LINEAR RETURN GRILLE
ADJ.	ADJACENT	LSR	LINEAR SUPPLY REGISTER
AFF	ABOVE FINISHED FLOOR	MD	MOTORIZED DAMPER
AHU	AIR HANDLER UNIT	MH	MANHOLE
AP	ACCESS PANEL	MSB	MOP SERVICE BASIN
B	BOILER	MUA	MAKE-UP AIR UNIT
BFF	BELOW FINISHED FLOOR	MV	MIXING VALVE (THERMOSTATIC)
BFP	BACKFLOW PREVENTOR	NC	NORMALLY CLOSED
BOD	BOTTOM OF DUCT	NO	NORMALLY OPEN
BOL	BOTTOM OF LOUVER	NTS	NOT TO SCALE
C	CONDENSATE	OA	OUTSIDE AIR
CI	CAST IRON	P	PUMP
CD	CEILING DIFFUSER	RA	RETURN AIR
CEG	CEILING EXHAUST GRILLE	RD	ROOF DRAIN
CER	CEILING EXHAUST REGISTER	RH	RADIANT HEATER
CFH	CUBIC FEET PER HOUR	RPBP	REDUCED PRESSURE BACKFLOW PREVENTOR
CFM	CUBIC FEET PER MINUTE	RWC	RAIN WATER CONDUCTOR
CO	CLEANOUT	S	SINK/SANITARY PIPING
COG	CLEANOUT ON GRADE	S=02'	SLOPE
COND	CONDENSATE PIPING	SA	SUPPLY AIR
CONT	CONTINUED	SD	SPLITTER DAMPER
CRG	CEILING RETURN GRILLE	SH	SHOWER
CRR	CEILING RETURN REGISTER	SP	SPRINKLER PIPING
CSV	CIRCUIT SETTER VALVE	SS	SOIL STACK
CT	COOLING TOWER	ST	STORM PIPING
CTR	COOLING TOWER RETURN	STM	STEAM PIPING
CTS	COOLING TOWER SUPPLY	SV	STACK VENT
CU	CONDENSING UNIT	SW	SAFEWASTE
CUH	CABINET UNIT HEATER	T	TUB
CWS	COLD WATER SUPPLY	TAG	TRANSFER AIR GRILLE
CWS/R	CONDENSER WATER SUPPLY/RETURN	TOD	TOP OF DUCT
DF	DRINKING FOUNTAIN	TP	TRAP PRIMER
DFU	DRAINAGE FIXTURE UNITS	TR	TRANSITION
DN	DOWN	TWR	TEMPERED WATER RETURN
EA	EXHAUST AIR	TWS	TEMPERED WATER SUPPLY
EBBH	ELECTRIC BASEBOARD HEATER	TYP	TYPICAL
EF	EXHAUST FAN	UH	UNIT HEATER
EWC	ELECTRIC WATER COOLER	UR	URINAL
EWH	ELECTRIC WATER HEATER	V	VENT PIPING
EX	EXISTING	VAV	VARIABLE AIR VOLUME
FC	FLEXIBLE CONNECTION/FAN COIL	VD	VOLUME DAMPER
FCO	FLOOR CLEANOUT	VIF	VERIFY IN FIELD
FD	FLOOR DRAIN	VS	VENT STACK
FRG	FLOOR RETURN GRILLE	VTR	VENT THRU ROOF
FRR	FLOOR RETURN REGISTER	WC	WATER CLOSET
G	GAS PIPING	WCO	WALL CLEANOUT
GV	GRAVITY VENTILATOR	WEG	WALL EXHAUST GRILLE
HB	HOSE BIBB	WER	WALL EXHAUST REGISTER
HD	HAND DAMPER	WHA	WATER HAMMER ARRESTOR
HP	HEAT PUMP	WHY	WALL HYDRANT
HW	HOT WATER	WMS	WIREMESH SCREEN
HWC	HANDICAPPED WATER CLOSET	WRG	WALL RETURN GRILLE
HWG	HOT WATER GENERATOR	WRR	WALL RETURN REGISTER
HWH	HOT WATER HEATER	WSFU	WALL SUPPLY FIXTURE UNIT
HWR	HOT WATER RETURN	WSG	WALL SUPPLY GRILLE
HWS	HOT WATER SUPPLY	WSR	WALL SUPPLY REGISTER
HX	HEAT EXCHANGER	LAV	LAVATORY
L	LOUVER	LBG	LINEAR BAR GRILLE
		LD	LINEAR DIFFUSER
		LF	LINEAR FEET

MECHANICAL SHEET INDEX

PROPOSED MECHANICAL SYMBOLS

RL — REFRIGERANT LIQUID ROUTE
DOMESTIC COLD WATER PIPE
FC 1 — EQUIPMENT MARK (TYPE FC, NUMBER 1)
GUH — GAS UNIT HEATER
B2 — SECTION INDICATOR (SECTION B2 ON DWG. – –)
B2 — DETAIL INDICATOR (DETAIL B2 ON DWG. – –)
2 — KEY NOTE INDICATOR (REFERS TO NOTES ON SAME SHEET)
1 — REVISIONS INDICATOR
HWS – – — PIPE RISER (RISER HWS-11 ON DWG. – –)
E-1 – – — DUCT RISER (RISER E-1 ON DWG. – –)
A 150 S — DIFFUSER/REGISTER/GRILLE MARK (TYPE A, 150 CFM, DIRECTION)
UC — DOOR UNDERCUT
TRANSFER AIR
Ø — DIAMETER
CONNECTION TO EXISTING
POINT OF DISCONNECTION
16x10 — FLAT OVAL DUCT DIMENSION
16x10 — INSIDE DUCT DIMENSION (IN INCHES, FIRST DIMENSION IS AS VIEWED)
SOUND LINED DUCTWORK
SUPPLY DUCT TURNED UP
SUPPLY DUCT TURNED DOWN
RETURN/EXHAUST DUCT TURNED UP
RETURN/EXHAUST DUCT TURNED DOWN
SQUARE ELBOW (WITH TURNING VANES)
ROUND ELBOW
SPIN-IN WITH VOLUME DAMPER FOR ROUND DUCT
TAKE OFF WITH VOLUME DAMPER FOR RECTANGULAR DUCT
OPEN END DUCT WITH WMS
EXISTING DUCT WORK OR EQUIPMENT
DUCT WORK TO BE REMOVED & EXISTING DUCTWORK TO BE CAPPED
EXISTING DUCTWORK TO BE RELOCATED
FLEXIBLE DUCTWORK (SINGLE LINE)
FLEXIBLE DUCTWORK (DOUBLE LINE)
SUPPLY DIFFUSER
SUPPLY AIR DIFFUSER WITH 3 DIRECTION DISCHARGE (BLACK TRIANGLE INDICATED BLANK OFF)
RETURN/EXHAUST REGISTER OR GRILLE
SLOT DIFFUSER WITH PLENUMS
EXHAUST FAN
M — LOUVER MOTOR OPERATED
ELECTRIC BASEBOARD
VOLUME DAMPER (MANUAL)
B — BACKDRAFT DAMPER
F — FIRE DAMPER
M — MOTORIZED DAMPER
S — MOTORIZED SMOKE/FIRE DAMPER
CO — CARBON MONOXIDE SENSOR
NOX — NITROGEN DIOXIDE SENSOR
T — THERMOSTAT
H — HUMIDISTAT
S — SENSOR
DOMESTIC HOT WATER PIPE
DOMESTIC HOT WATER RETURN PIPE
SAN — SANITARY SEWER
SIDEWALL SPRINKLER HEAD
RS — REFRIGERANT SUCTION ROUTE

BUTTERFLY VALVE
GATE VALVE
B — EMERGENCY BOILER SHUTOFF
S — SOUND ATTENUATOR
PRESSURE/TEMPERATURE TEST PLUG
PRESSURE GAUGE
GAUGECOCK
THERMOMETER
PRESSURE TEMPERATURE TAP
EXISTING HYDRONIC CONTROL VALVE
HOSE BIBB DRAIN VALVE
INSULATED PIPE
VERTICAL VALVE
CIRCUIT SETTER
F — FLOW METER (MAGNETIC)
F — FLOW METER (VENTURI)
BALL JOINT
SD — SUCTION DIFFUSER
PIPE ANCHOR
PIPE GUIDE
UNION
VB — VACUUM BREAKER
CAP AND VALVED
CONCENTRIC REDUCER
ECCENTRIC REDUCER STRAIGHT INVERT
ECCENTRIC REDUCER STRAIGHT CROWN
M — METER (SEE CONNECTED PIPING FOR TYPE OF SERVICE)
CHAIN OPERATOR
MOTOR OPERATOR
FLOAT
PUMP
CO — CO — CLEANOUT
FD — FLOOR DRAIN WITH P-TRAP
FUNNEL DRAIN
TRAP
DOUBLE CHECK VALVE TYPE BACKFLOW PREVENTER WITH GATE VALVES
REDUCED PRESSURE ZONE BACKFLOW PREVENTER WITH GATE VALVES
REDUCED PRESSURE ZONE BACKFLOW PREVENTER WITH BALL VALVES
DOUBLE CHECK VALVE TYPE BACKFLOW PREVENTER WITH BALL VALVES
DD — DUCT DETECTOR
BALL VALVE
COND — CONDENSATE WATER PIPING
A — COMPRESSED AIR PIPE
VAC — VACUUM PIPE
G — NATURAL GAS PIPING
AW — ACID WASTE PIPING
FO — FUEL OIL PIPING
PIPING TO BE DEMOLISHED
CONCEALED SPRINKLER HEAD
PENDANT SPRINKLER HEAD
UPRIGHT SPRINKLER HEAD

ANGLE GLOBE VALVE
PLUG VALVE
OS & Y GATE VALVE
2-WAY CONTROL VALVE
3-WAY CONTROL VALVE
PRESSURE RELIEF VALVE
TP — TEMPERATURE & PRESSURE RELIEF VALVE
CALIBRATED BALANCE VALVE
AUTOMATIC FLOW CONTROL VALVE
SWING CHECK VALVE
SPRING LOADED CHECK VALVE
ALARM CHECK VALVE
COMBINATION CHECK/BALANCE/ SHUT OFF VALVE
NEEDLE VALVE
PRESSURE REGULATOR
BACK PRESSURE REGULATOR
DIAPHRAGM VALVE
SOLENOID VALVE
FLOW SWITCH
PRESSURE SWITCH
VALVE MONITOR SWITCH
STRAINER
BLOW-OFF STRAINER
BLIND FLANGE END CONNECTION
LOCK SHIELD GATE VALVE
GLOBE VALVE
SAN — SANITARY SEWER BELOW GRADE OR SLAB
ST — STORM SEWER
ST — STORM SEWER BELOW GRADE OR SLAB
V — PLUMBING VENT
D — DRAIN PIPE
F — FIRE PROTECTION PIPE
CH — CHEMICAL FEED PIPE
EX — EXPANSION TANK PIPE
HWS — HEATING HOT WATER SUPPLY PIPE
HWR — HEATING HOT WATER RETURN PIPE
CHWS — CHILLED WATER SUPPLY PIPE
CHWR — CHILLED WATER RETURN PIPE
CWS — CONDENSER WATER SUPPLY PIPE
CWR — CONDENSER WATER RETURN PIPE
HB — HOSE BIBB
FPHB — FROSTPROOF HOSE BIBB
WATER HAMMER ARRESTOR
PITCH PIPE DOWN IN DIRECTION OF ARROW
TEE TURN UP
TEE TURNED DOWN
PIPE TURNED UP
PIPE TURNED DOWN
K — KEY SWITCH
BUSHING
FLEXIBLE PIPE CONNECTION
MANUAL AIR VENT

RVE 1901
REMINGTON & VERNICK ENGINEERS
2059 SPRINGDALE ROAD
CHERRY HILL, NJ 08003
(856) 795-9595, FAX (856) 795-1882
WEB ADDRESS : RVE.COM
Certification of Authorization: 24 GA 28003300
Excellence • Innovation • Service

DATE: 02-17-2025
DENNIS K. YODER
NJ PROFESSIONAL ENGINEER LIC. No. 31866

PLANS WHICH DO NOT BEAR AN EMBOSSED SEAL ARE NOT VALID.

No.	REVISION	DATE	BY	CHK
1	ELSA PRELIMINARY REVIEW	6-4-24	B.Z.	M.G.
2	ELSA FINAL REVIEW	11-4-24	B.Z.	M.G.

MECHANICAL COVER SHEET

EWING LAWRANCE SEWAGE AUTHORITY
ELSA VEHICLE STORAGE BUILDING
TOWNSHIP OF LAWRENCE MERCER COUNTY NEW JERSEY

DRAWN BY:	DESIGN BY:	CHECKED BY:	SCALE:
B.Z.	M.G.		AS NOTED
DATE: 10.2023		SHEET No.: M-1.0	
JOB No.: 1102M026			

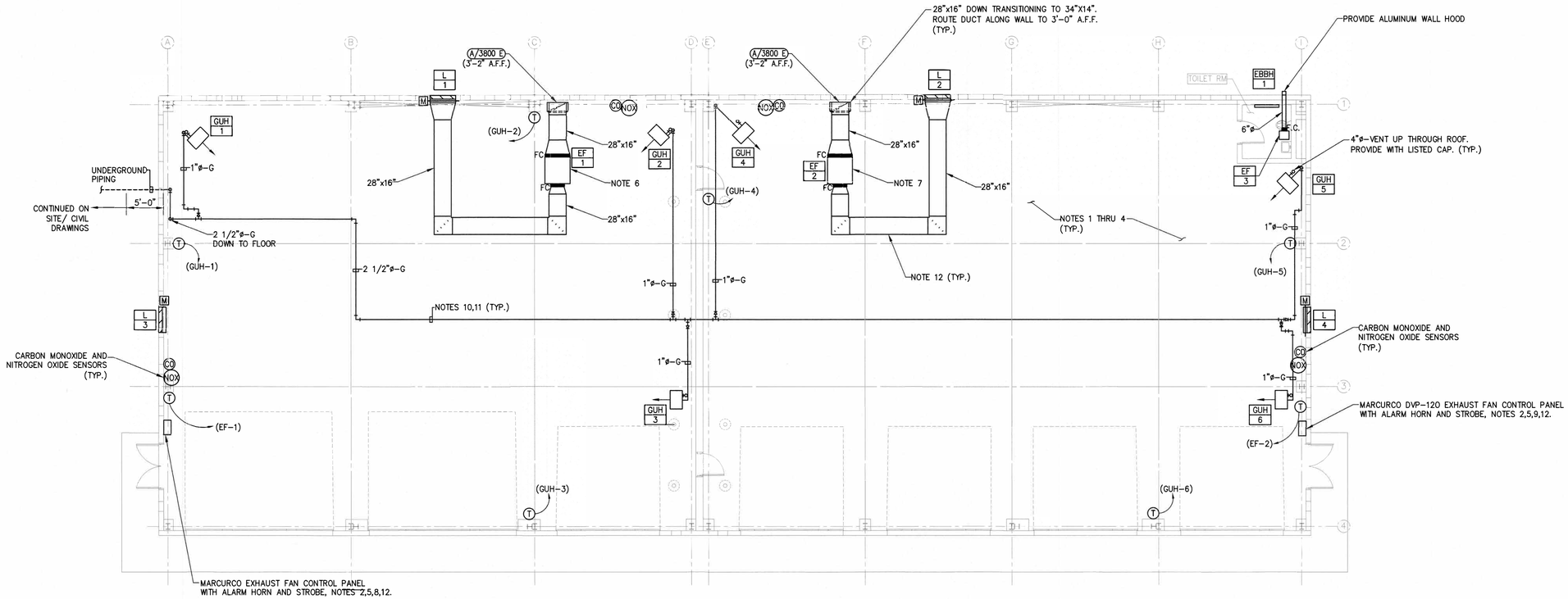

1 MECHANICAL FLOOR PLAN

SCALE: 1/8" = 1'-0"

NOTES:

1. ALL NOTES, SYMBOLS, AND ABBREVIATIONS ON DRAWINGS M-1.0 APPLY TO THIS DRAWING.
2. ALL WORK REQUIRED TO SUCCESSFULLY COMPLETE THIS PROJECT SHALL BE INCLUDED IN THE SCOPE OF WORK. IT IS THE INTENT OF THE PLANS AND SPECIFICATIONS TO SECURE A COMPLETELY INTERCONNECTED AND FUNCTIONING SYSTEM AND IF ANY WORKMANSHIP OR MATERIALS BE REQUIRED WHICH ARE OBVIOUSLY NECESSARY TO CARRY OUT THE FULL INTENT AND MEANING OF THE PLANS AND SPECIFICATIONS OR TO BE REASONABLY INFERRED THEREFROM, THE COST OF SUCH WORKMANSHIP OR MATERIALS SHALL BE INCLUDED IN THE SCOPE OF WORK.
3. DUCTWORK ROUTINGS SHOWN ARE APPROXIMATE. THE CONTRACTOR SHALL BE RESPONSIBLE FOR FINAL ROUTINGS IN THE FIELD TO AVOID INTERFERENCES. CONTRACTOR TO COORDINATE DUCTWORK/UNIT INSTALLATION WITH ALL STRUCTURAL STEEL, ELECTRICAL CONDUIT, SYSTEMS WIRING/CABLE, CLOCK SYSTEM, FIRE PROTECTION PIPING, PLUMBING PIPING (SANITARY DRAINAGE, ROOF DRAINAGE, DOMESTIC HOT/COLD WATER AND GAS PIPING), ETC. AS REQUIRED. ALL MODIFICATIONS MADE TO THE NEW DUCTWORK OR PIPING TO RESOLVE INTERFERENCES SHALL BE PROVIDED BY THE CONTRACTOR AT NO ADDITIONAL COST TO THE OWNER. SEE DIVISION 26 DRAWINGS AND SPECIFICATIONS FOR ADDITIONAL REQUIREMENTS.
4. EQUIPMENT LOCATIONS AS SHOWN ARE APPROXIMATE. THE CONTRACTOR SHALL DETERMINE FINAL LOCATIONS IN THE FIELD TO AVOID INTERFERENCES AND MAINTAIN ALL OF THE MANUFACTURER'S RECOMMENDED CLEARANCES. CONTRACTOR SHALL COORDINATE WITH EXISTING & PROPOSED STRUCTURAL STEEL, ELECTRICAL CONDUIT, PIPING, FIRE ALARM, ETC. ALL MODIFICATIONS MADE TO THE EQUIPMENT TO RESOLVE INTERFERENCES SHALL BE PROVIDED BY THE CONTRACTOR AT NO ADDITIONAL COST TO THE OWNER.
5. PROVIDE COMBINATION CARBON MONOXIDE AND NITROGEN DIOXIDE DETECTOR MODEL CX-6 BY MACURCO OR APPROVED EQUAL. INSTALL SENSOR APPROXIMATELY 5'-0" A.F.F. MINIMUM QUANTITY OF DETECTORS SHOWN, PROVIDE FINAL QUANTITY AND LOCATION FOR DETECTION OVER ENTIRE MECHANICAL AREA IN ACCORDANCE WITH THE MANUFACTURER'S RECOMMENDATIONS. CONNECT DETECTORS TO THE DVP-120 CONTROL PANEL THAT CONTROLS FAN IN ASSOCIATED DETECTION AREA.
6. INTERLOCK EXHAUST FAN EF-1 WITH MOTORIZED DAMPER FOR LOUVER L-1 AND L-3.
7. INTERLOCK EXHAUST FAN EF-2 WITH MOTORIZED DAMPER FOR LOUVER L-2 AND L-4.
8. PANEL SHALL CONTROL EXHAUST FAN EF-1 AND MOTORIZED DAMPER FOR LOUVER L-3.
9. PANEL SHALL CONTROL EXHAUST FAN EF-2 AND MOTORIZED DAMPER FOR LOUVER L-4.
10. FUEL GAS PIPING SHALL BE STEEL PIPE. SEE SPECIFICATION SECTION 231123 FOR ADDITIONAL INFORMATION.
11. FUEL GAS PIPING SHALL BE PAINTED SAFETY YELLOW.
12. THE MACURCO DVP-120 AUTOMATIC EXHAUST FAN CONTROLLER SHALL ACTIVATE THE EXHAUST FANS AND ALARM BELL ON A DETECTION OF CARBON MONOXIDE AND/OR NITROGEN DIOXIDE. CARBON MONOXIDE DETECTION AND/OR NITROGEN DIOXIDE LEVELS SHALL BE AS RECOMMENDED BY THE EQUIPMENT MANUFACTURER. PROVIDE SYSTEM WITH A MANUAL OVERRIDE SWITCH SUCH THAT THE FANS CAN RUN CONTINUOUSLY.

RVE 1901
REMINGTON & VERNICK ENGINEERS
2059 SPRINGDALE ROAD
CHERRY HILL, NJ 08003
(856) 795-9595, FAX (856) 795-1882
WEB ADDRESS : RVE.COM
Certification of Authorization: 24 GA 28003300
Excellence • Innovation • Service

DATE: 02-17-2025
DENNIS K. YODER
NJ PROFESSIONAL ENGINEER LIC. No. 31866

PLANS WHICH DO NOT BEAR AN EMBOSSED SEAL ARE NOT VALID.

No.	REVISION	DATE	BY	CHK
1	ELSA PRELIMINARY REVIEW	6-4-24	B.Z.	M.G.
2	ELSA FINAL REVIEW	11-4-24	B.Z.	M.G.

MECHANICAL FLOOR PLAN

EWING LAWRANCE SEWAGE AUTHORITY

ELSA VEHICLE STORAGE BUILDING

TOWNSHIP OF LAWRENCE MERCER COUNTY NEW JERSEY

DRAWN BY:	DESIGN BY:	CHECKED BY:	SCALE:
B.Z.	M.G.		AS NOTED
DATE: 10.2023		SHEET No.: M-2.1	
JOB No.: 1102M026			

P:\Projects\Mercer County\1102M026\Sheets\M-2.1 Mechanical Floor Plan.dwg 2/18/2025 7:14:52 AM

P:\Projects\Mercer County\1102M026\Sheets\M-2.1 Mechanical Floor Plan.dwg

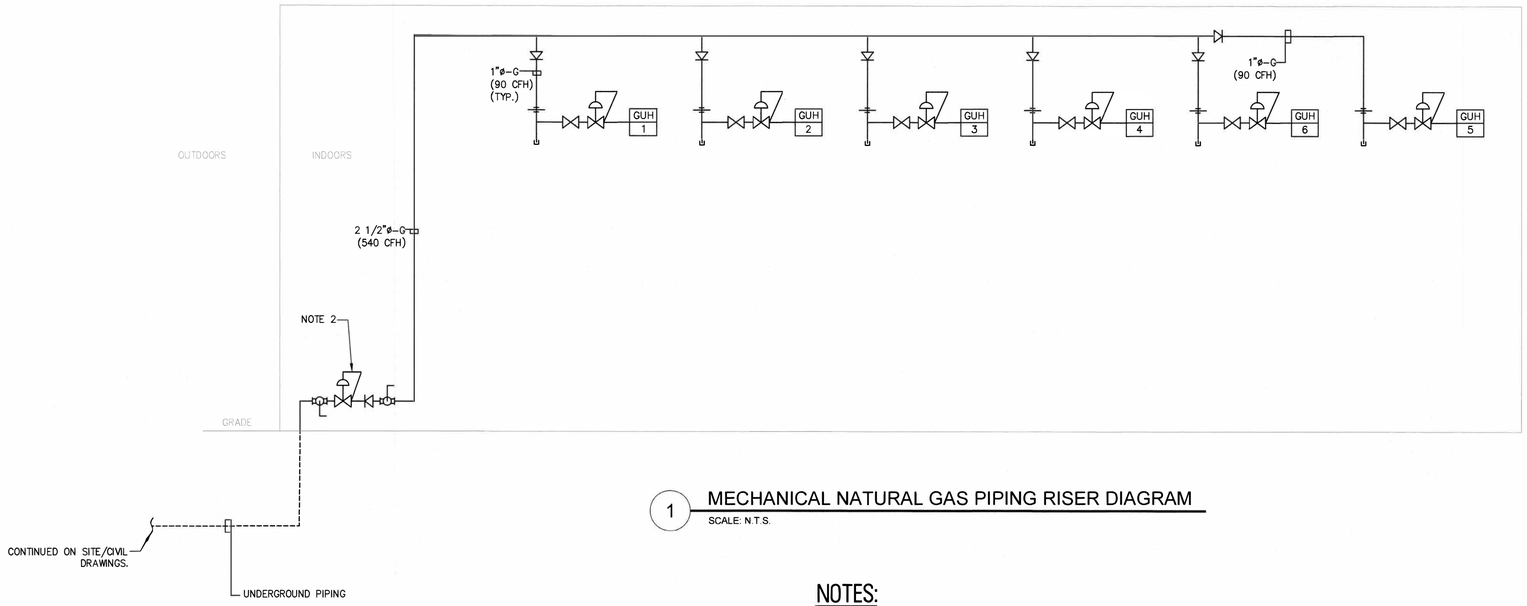

1 MECHANICAL NATURAL GAS PIPING RISER DIAGRAM

SCALE: N.T.S.

NOTES:

1. NATURAL GAS PIPING DOWN STREAM OF PRV SIZED FOR AN INLET PRESSURE OF 2 PSI OR LESS WITH A 0.3" W.C. PRESSURE DROP AND A MAXIMUM EQUIVALENT LENGTH TO FURTHEST FIXTURE OF 300 FT.
2. PROVIDE SERVICE CLASS REGULATOR WITH SPRING AND ORIFICE SIZED FOR AN INLET PRESSURE OF 21 PSI AND AND OUTLET PRESSURE OF 0.5 PSI. DROP SHALL NOT EXCEED 1.0" W.C. AND LOCKUP PRESSURE SHALL NOT EXCEED 3.0" W.C.

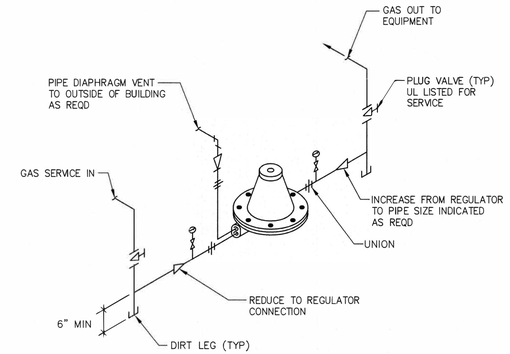

GAS PRESSURE REDUCING STATION

N.T.S.

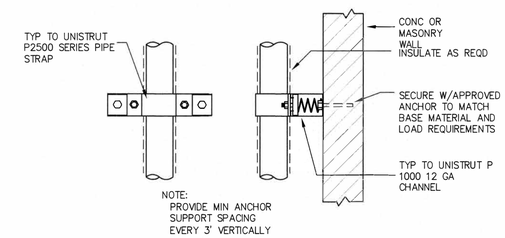

VERTICAL PIPE BRACKET SUPPORT

N.T.S.

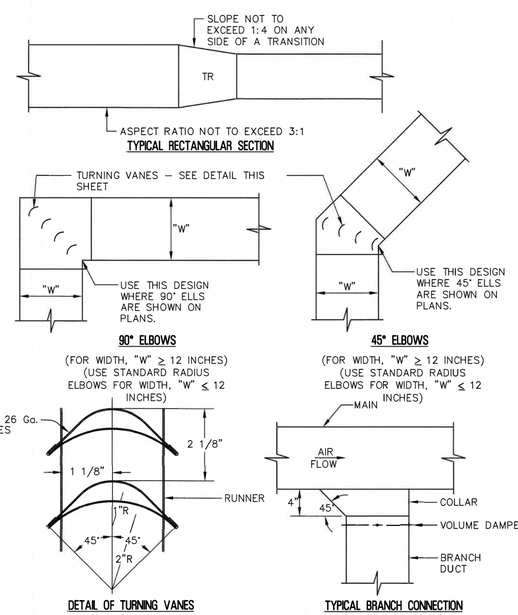

DETAILS OF DUCT LAYOUT

N.T.S.

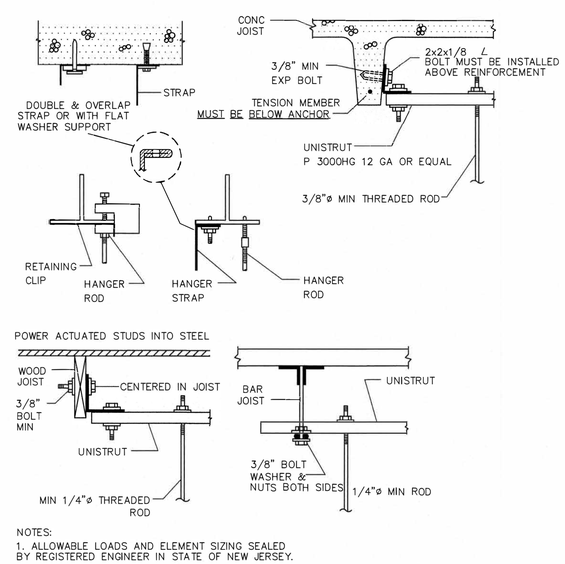

NOTES:
1. ALLOWABLE LOADS AND ELEMENT SIZING SEALED BY REGISTERED ENGINEER IN STATE OF NEW JERSEY.

UPPER ATTACHEMENT AND JOIST HANGERS FOR DUCTWORK

N.T.S.

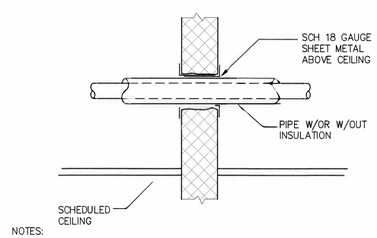

NOTES:
1 TYP FOR NON-INSULATED PIPE AND CONDUIT
2 TYP FOR MASONRY OR CONCRETE WALL
3 FIRE RATED WALLS MUST BE SEALED W/ APPROPRIATE FIRE RETARDED CAULKING

PIPE PENETRATION THRU WALL ABOVE CEILING

N.T.S.

RVE 1901
REMINGTON & VERNICK ENGINEERS
2059 SPRINGDALE ROAD
CHERRY HILL, NJ 08003
(856) 795-9595, FAX (856) 795-1882
WEB ADDRESS : RVE.COM
Certification of Authorization: 24 GA 28003300
Excellence • Innovation • Service

DATE: 02-17-2025
DENNIS K. YODER
NJ PROFESSIONAL ENGINEER LIC. No. 31866

No.	REVISION	DATE	BY	CHK
1	ELSA PRELIMINARY REVIEW	5-4-24	B.Z.	M.G.
2	ELSA FINAL REVIEW	11-4-24	B.Z.	M.G.

MECHANICAL DETAILS

EWING LAWRANCE SEWAGE AUTHORITY
ELSA VEHICLE STORAGE BUILDING
TOWNSHIP OF LAWRENCE MERCER COUNTY NEW JERSEY

DRAWN BY	DESIGN BY	CHECKED BY	SCALE
B.Z.	M.G.		AS NOTED
DATE 10.2023		SHEET No.	M-3.1
JOB No. 1102M026			

P:\Projects\Mercer County\1102M026\Sheets\M-3.1 Mechanical Details.dwg 2/18/2025 7:14:52 AM

VENTILATION SCHEDULE

ROOM NAME	EQUIPMENT TAG NUMBER	APPROX. AREA (SF)	OCCUPANT DENSITY # PEOPLE/ 1000 SF	NUMBER OF PEOPLE & / OR FIXTURES	VENTILATION AIR REQUIREMENTS (ASHRAE 62, INTERNATIONAL MECH CODE 2021)											OUTDOOR AIR	EXHAUST AIR	RETURN AIR	SUPPLY AIR
					PEOPLE OUTDOOR AIRFLOW RATE Rp	TOTAL PEOPLE OUTDOOR AIRFLOW (CFM)	AREA OUTDOOR AIRFLOW RATE Ra	TOTAL AREA OUTDOOR AIRFLOW (CFM)	BREATHING ZONE OUTDOOR AIRFLOW (CFM) Vbz	ZONE AIR DISTRIBUTION EFFECTIVENESS (COOLING) Ez	ZONE AIR DISTRIBUTION EFFECTIVENESS (HEATING) Ez	ZONE OUTDOOR AIRFLOW (CFM) Voz	PRIMARY OUTDOOR AIR FRACTION Zp	EXHAUST AIRFLOW RATE	TOTAL EXHAUST AIRFLOW (CFM)	CORRECTED DESIGN TOTAL (CFM) Vot	DESIGN TOTAL (CFM)	DESIGN TOTAL (CFM)	DESIGN TOTAL MAX/MIN (CFM)
VEHICLE STORAGE AREA – WEST	EF–1	4,400	N/A	N/A	N/A	N/A	N/A	N/A	N/A	N/A	N/A	0	N/A	0.75 CFM/SQ. FT.	3,300	0	3,800	0	0
VEHICLE STORAGE AREA – EAST	EF–2	5,000	N/A	N/A	N/A	N/A	N/A	N/A	N/A	N/A	N/A	0	N/A	0.75 CFM/SQ. FT.	3,750	0	3,800	0	0
TOILET ROOM	EF–3	48	N/A	1 FIXTURE	N/A	N/A	N/A	N/A	N/A	N/A	N/A	0	N/A	70 CFM/FIXTURE	70	0	150	0	0

EXHAUST FAN SCHEDULE

TAG	ROOM(S) SERVED	FAN TYPE	CFM	TOTAL S.P. (in. w.c.)	MOTOR HP OR WATTS	DRIVE TYPE	ELECTRICAL V/PH/HZ	SONES	ROOF / WALL OPENING SIZE	APPROXIMATE WEIGHT (LBS)	BASIS OF DESIGN	NOTES
EF–1	VEHICLE STORAGE AREA – WEST	INLINE	3,800	0.5	1	BELT	208/1/60	16.3	NA	400	COOK 180 SDB	1
EF–2	VEHICLE STORAGE AREA – EAST	INLINE	3,800	0.5	1	BELT	208/1/60	16.3	NA	400	COOK 180 SDB	1
EF–3	TOILET 104	CEILING MOUNTED	150	0.25	66	DIRECT	120/1/60	1.8	NA	20	COOK GC–186	2

NOTES:
1. PROVIDE FAN WITH UNIT MOUNTED DISCONNECT SWITCH IN NEMA 3R ENCLOSURE (WITH INTEGRAL STARTER), INSULATED HOUSING, MOTOR COVER & BELT GUARD, ALUMINUM CONSTRUCTION, INLINE DISCHARGE CONFIGURATION, HANGING SPRING ISOLATORS AND RODS, FLEX DUCT CONNECTIONS, AND ALL OTHER ACCESSORIES REQUIRED TO INSTALL AND OPERATE THE EXHAUST FAN.
2. PROVIDE FAN WITH BACKDRAFT DAMPER, DISCONNECT SWITCH, FAN SPEED CONTROL, ALUMINUM GRILLE, VIBRATION ISOLATORS, WALL CAP WITH INSECT SCREEN, AND ALL OTHER ACCESSORIES REQUIRED TO INSTALL AND OPERATE THE EXHAUST FAN.

GAS-FIRED UNIT HEATER SCHEDULE

TAG	TYPE	LOCATION	APPROX. DIM (W x D x H)	WEIGHT (LBS)	FAN(S) AIRFLOW (CFM)	FAN(S) MOTOR HP	ELECTRICAL MCA	ELECTRICAL FLA	ELECTRICAL V/Ph/Hz	NOMINAL OUTPUT (MBH)	NOMINAL INPUT (MBH)	EFFICIENCY	MIN GAS INLET (IN)	BASIS OF DESIGN	NOTES
GUH–1	VERTICAL	VEHICLE STORAGE BUILDING – WEST	30" x 20–3/4" x 22–5/8"	110	1100	1/10	7.5	6.4	120/1/60	73.8	90	82%	1/2	TRANE GTNE009	SEE BELOW
GUH–2	VERTICAL	VEHICLE STORAGE BUILDING – WEST	30" x 20–3/4" x 22–5/8"	110	1100	1/10	7.5	6.4	120/1/60	73.8	90	82%	1/2	TRANE GTNE009	SEE BELOW
GUH–3	VERTICAL	VEHICLE STORAGE BUILDING – WEST	30" x 20–3/4" x 22–5/8"	110	1100	1/10	7.5	6.4	120/1/60	73.8	90	82%	1/2	TRANE GTNE009	SEE BELOW
GUH–4	VERTICAL	VEHICLE STORAGE BUILDING – EAST	30" x 20–3/4" x 22–5/8"	110	1100	1/10	7.5	6.4	120/1/60	73.8	90	82%	1/2	TRANE GTNE009	SEE BELOW
GUH–5	VERTICAL	VEHICLE STORAGE BUILDING – EAST	30" x 20–3/4" x 22–5/8"	110	1100	1/10	7.5	6.4	120/1/60	73.8	90	82%	1/2	TRANE GTNE009	SEE BELOW
GUH–6	VERTICAL	VEHICLE STORAGE BUILDING – EAST	30" x 20–3/4" x 22–5/8"	110	1100	1/10	7.5	6.4	120/1/60	73.8	90	82%	1/2	TRANE GTNE009	SEE BELOW

NOTES:
1. PROVIDE HEATERS WITH SUMMER–WINTER SWITCH, MOUNTING ACCESSORIES, THERMOSTAT AND ALL OTHER CONTROL DEVICES AND ACCESSORIES REQUIRED TO INSTALL AND OPERATE THE UNIT HEATERS.
2. PROVIDE UNIT HEATERS WITH VENTING AS SHOWN ON THE CONTRACT DRAWINGS IN ACCORDANCE WITH THE MANUFACTURER'S RECOMMENDATIONS AND ALL APPLICABLE CODES AND STANDARDS.

LOUVER SCHEDULE

TAG	SERVICE	SYSTEM	AIRFLOW (CFM)	SIZE (W x H)	FREE AREA (SQ. FT.)	MATERIAL	FINISH	BASIS OF DESIGN	NOTES
L–1	EXHAUST	EF–1	3,800	42" x 30"	4.67	ALUMINUM	MILL	RUSKIN ELF6375DXH	SEE BELOW
L–2	EXHAUST	EF–2	3,800	42" x 30"	4.67	ALUMINUM	MILL	RUSKIN ELF6375DXH	SEE BELOW
L–3	O/A INTAKE	EF–1	3,800	42" x 30"	4.67	ALUMINUM	MILL	RUSKIN ELF6375DXH	SEE BELOW
L–4	O/A INTAKE	EF–2	3,800	42" x 30"	4.67	ALUMINUM	MILL	RUSKIN ELF6375DXH	SEE BELOW

NOTES:
1. PROVIDE WITH EXPANDED, FLATTENED ALUMINUM BIRD SCREEN (3/4" x 0.051") IN REMOVABLE FRAME.
2. PROVIDE LOUVER WITH MOTORIZED DAMPER AND ACTUATOR.
3. INTERLOCK LOUVER DAMPER ACTUATORS WITH ASSOCIATED EXHAUST FANS.
4. LOUVER SHALL BE HEAVY DUTY WITH A 0.125" NOMINAL FRAME AND BLADE THICKNESS.
5. PROVIDE LOUVER WITH BAKED ENAMEL FINISH. COORDINATE COLOR WITH OWNER.

ELECTRIC BASEBOARD HEATER SCHEDULE

TAG	LOCATION	LENGTH (IN)	OUTPUT (BTUH)	OUTPUT (WATTS)	ELECTRICAL (V–PH–HZ)	AMPS	BASIS OF DESIGN	NOTES
EBBH–1	TOILET ROOM	40	2550	750	208–1–60	3.6	MARKEL MODEL F2907–040C	SEE BELOW

NOTES:
1. HEATERS SHALL BE PROVIDED WITH INTEGRAL THERMOSTATS, OVERTEMPERATURE THERMAL LIMIT PROTECTION AND WIREWAY COVERS.
2. COORDINATE COLOR AND FINISH TYPE WITH THE OWNER.

GRILLE, REGISTER & DIFFUSER SCHEDULE

TAG	DESCRIPTION	FACE	NECK	DIRECTION	BASIS OF DESIGN MANUFACTURER	BASIS OF DESIGN MODEL	BASIS OF DESIGN NOTES
A	REGISTER	32" x 32"	32" x 32"	EXHAUST	TITUS	60FL	SEE BELOW

NOTES:
1. COORDINATE COLOR & FINISH WITH OWNER.
2. NC (NOISE CRITERIA) LEVEL MAY BE NO GREATER THAN 25.
3. PROVIDE WITH STEEL OPPOSED BLADE DAMPER.

RVE 1901
REMINGTON & VERNICK ENGINEERS
2059 SPRINGDALE ROAD
CHERRY HILL, NJ 08003
(856) 795-9595, FAX (856) 795-1882
WEB ADDRESS : RVE.COM
Certification of Authorization: 24 GA 28003300
Excellence • Innovation • Service

DATE: 02-17-2025
DENNIS K. YODER
NJ PROFESSIONAL ENGINEER LIC. No. 31866

No.	REVISION	DATE	BY	CHK
1	ELSA PRELIMINARY REVIEW	6-4-24	B.Z.	M.G.
2	ELSA FINAL REVIEW	11-4-24	B.Z.	M.G.

MECHANICAL SCHEDULES

EWING LAWRANCE SEWAGE AUTHORITY
ELSA VEHICLE STORAGE BUILDING
TOWNSHIP OF LAWRENCE MERCER COUNTY NEW JERSEY

DRAWN BY	DESIGN BY	CHECKED BY	SCALE
B.Z.	M.G.		AS NOTED

DATE: 10.2023
JOB No.: 1102M026
SHEET No.: M-4.1

P:\Projects\Mercer County\1102M026\Sheets\M-4.1 Mechanical Schedules.dwg 2/18/2025 7:14:52 AM

P:\Projects\Mercer County\1102M026\Sheets\M-4.1 Mechanical Schedules.dwg

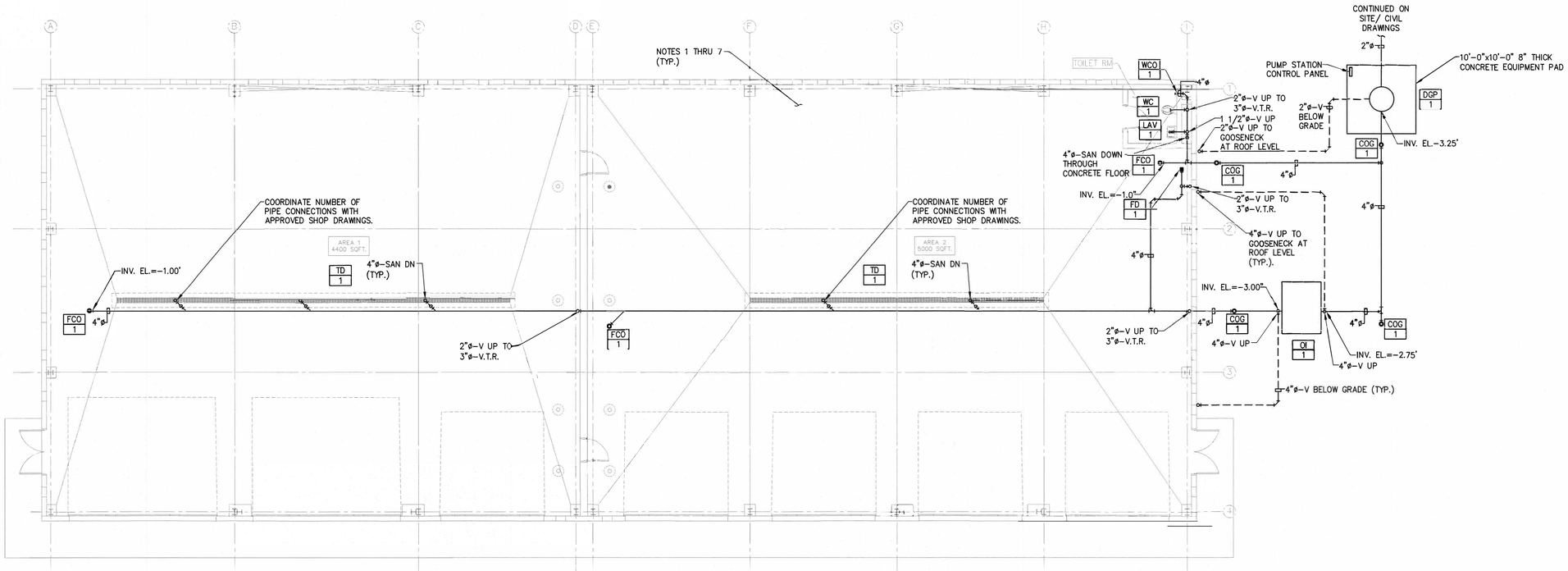

1 PLUMBING SANITARY PIPING FLOOR PLAN

SCALE: 1/8" = 1'-0"

NOTES:

1. ALL NOTES, SYMBOLS, AND ABBREVIATIONS ON DRAWING M-1.0 APPLY TO THIS DRAWING.
2. ALL INVERTS SHOWN ARE APPROXIMATE. INVERT ELEVATION BASED ON FINISHED FLOOR ELEVATION OF 0.00'.
3. ALL HORIZONTAL DRAINAGE PIPING 3 INCHES IN DIAMETER AND SMALLER SHALL BE SLOPED A MINIMUM OF 1/4" PER FOOT IN THE DIRECTION OF FLOW. ALL HORIZONTAL DRAINAGE PIPING 4 INCHES IN DIAMETER AND LARGER SHALL BE SLOPED A MINIMUM OF 1/8" PER FOOT IN THE DIRECTION OF FLOW.
4. CONTRACTOR SHALL ROUTE DRAINAGE RISERS AND VENT LINES IN THE WALLS WHERE SHOWN. WHERE PIPING CAN NOT BE LOCATED IN WALLS. THE CONTRACTOR SHALL PROVIDE CHASE WALLS AS REQUIRED TO CONCEAL PIPING FROM VIEW. CHASE WALL AND FINISH TO MATCH SURROUNDING WALLS. COORDINATE ALL CHASE WALLS WITH ARCHITECT.
5. COORDINATE PIPING LAYOUTS IN ALL AREAS WITH OTHER TRADES PRIOR TO INSTALLATION TO AVOID INTERFERENCES. RELOCATE NEW PIPE TO ACCOMMODATE NEW DUCTWORK, EQUIPMENT, STRUCTURE, CONDUIT, ETC.
6. NOT ALL PIPE SIZES AND INLINE DEVICES ARE SHOWN ON THE PLAN FOR CLARITY PURPOSES. SEE THE PLUMBING RISER DIAGRAMS AND DETAIL SHEET(S) FOR ADDITIONAL REQUIREMENTS AND DETAILS. THE CONTRACTOR SHALL PROVIDE ALL REDUCERS, FITTINGS, ETC. AS REQUIRED TO COMPLETE THE NEW WORK EVEN IF NOT SPECIFICALLY SHOWN ON THE PLAN OR RISER DIAGRAMS.
7. VENT PIPING NOT SHOWN FOR CLARITY. SEE THE PLUMBING SANITARY PIPING RISER DIAGRAM FOR VENTING.

RVE 1901
REMINGTON & VERNICK ENGINEERS
2059 SPRINGDALE ROAD
CHERRY HILL, NJ 08003
(856) 795-9595, FAX (856) 795-1882
WEB ADDRESS : RVE.COM
Certification of Authorization: 24 GA 28003300
Excellence • Innovation • Service

DATE: 02-17-2025

DENNIS K. YODER
NJ PROFESSIONAL ENGINEER LIC. No. 31866

PLANS WHICH DO NOT BEAR AN EMBOSSED SEAL ARE NOT VALID.

No.	REVISION	DATE	BY	CHK
1	ELSA PRELIMINARY REVIEW	6-4-24	B.Z.	M.G.
2	ELSA FINAL REVIEW	11-4-24	B.Z.	M.G.

PLUMBING SANITARY PIPING FLOOR PLAN

EWING LAWRANCE SEWAGE AUTHORITY

ELSA VEHICLE STORAGE BUILDING

TOWNSHIP OF LAWRENCE MERCER COUNTY NEW JERSEY

DRAWN BY:	DESIGN BY:	CHECKED BY:	SCALE:
B.Z.	M.G.		AS NOTED

DATE: 10.2023

JOB No.: 1102M026

SHEET No.: P-2.1

P:\Projects\Mercer County\1102M026\Sheets\P-2.1 Plumbing Sanitary Piping Floor Plan.dwg 2/18/2025 7:13:41 AM

P:\Projects\Mercer County\1102M026\Sheets\P-2.1 Plumbing Sanitary Piping Floor Plan.dwg

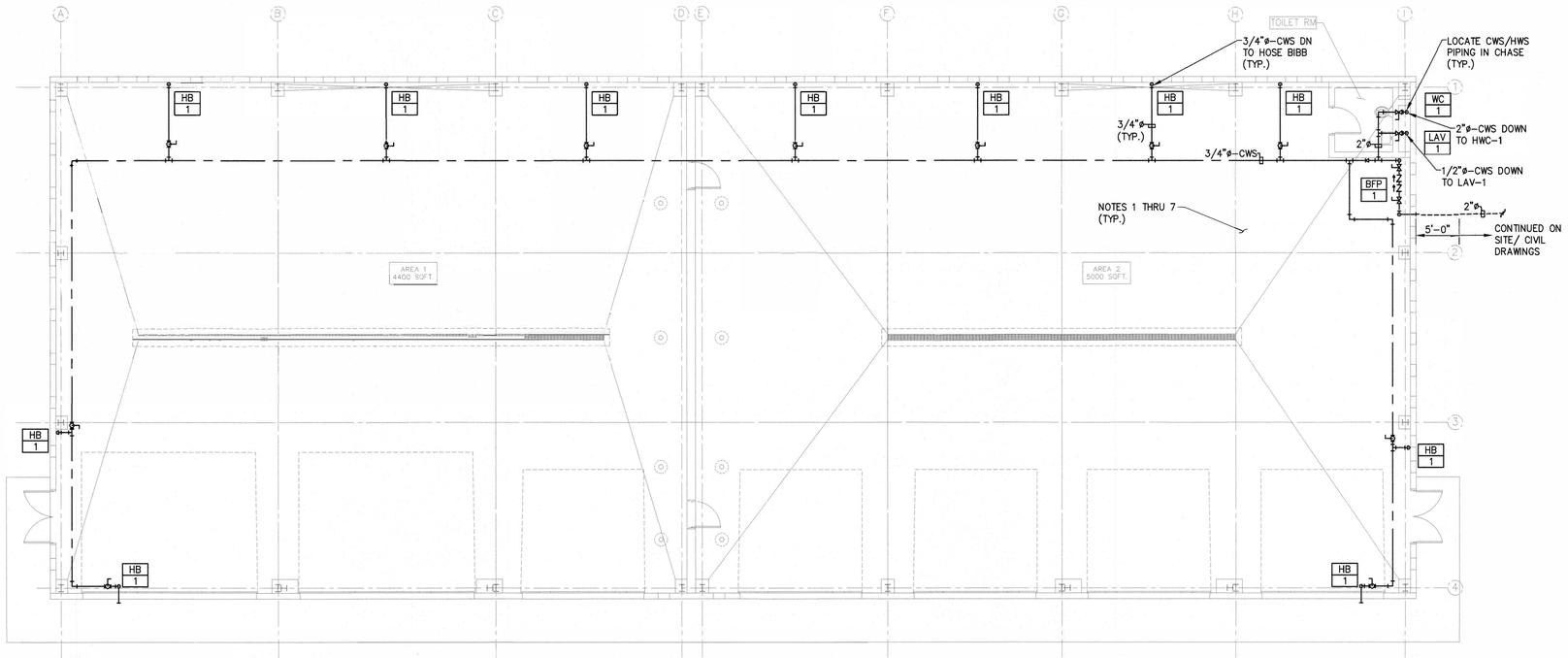

1 PLUMBING UTILITY PIPING FLOOR PLAN

SCALE: 1/8" = 1'-0"

NOTES:

1. ALL NOTES, SYMBOLS, AND ABBREVIATIONS ON DRAWING M-1.0 APPLY TO THIS DRAWING.
2. COORDINATE PIPING LAYOUTS IN ALL AREAS WITH OTHER TRADES PRIOR TO INSTALLATION TO AVOID INTERFERENCES.
3. NOT ALL PIPE SIZES AND IN-LINE DEVICES ARE SHOWN ON THE PLAN FOR CLARITY, SEE THE PLUMBING RISER DIAGRAMS AND DETAIL SHEET(S) FOR ADDITIONAL INFORMATION. THE CONTRACTOR SHALL PROVIDE ALL REDUCERS, VALVES, ETC. AS REQUIRED TO COMPLETE THE NEW WORK EVEN IF NOT SPECIFICALLY SHOWN ON THE PLAN, RISER, OR DETAIL DRAWINGS
4. PROVIDE LINE SIZE SHUT-OFF VALVES IN BRANCH LINES WHERE BRANCH LINES CONNECT TO MAINS.
5. CONTRACTOR SHALL ROUTE UTILITY AND DRAINAGE PIPING ABOVE CEILINGS, BELOW FLOORS, AND IN WALLS AS SHOWN, UNLESS OTHERWISE NOTED. WHEN PIPING CAN NOT BE LOCATED IN WALLS, THE CONTRACTOR SHALL PROVIDE CHASE WALLS AS REQUIRED TO CONCEAL PIPING FROM VIEW. CHASE WALL MATERIAL AND FINISH TO MATCH THE SURROUNDING WALLS. COORDINATE CHASE WALLS WITH ARCHITECT. ROUTE UTILITY MAINS AS CLOSE TO THE ROOF DECK AS POSSIBLE. ROUTE PIPE THROUGH OPEN WEB JOIST WHERE POSSIBLE.
6. DOMESTIC WATER PIPING SHALL BE COPPER PIPE WITH SOLDERED FITTINGS/JOINTS IN ACCORDANCE WITH THE CONTRACT SPECIFICATIONS.
7. PIPING IS SHOWN FOR CLARITY AND DIAGRAMMATICAL PURPOSES. CONTRACTOR SHALL COORDINATE FINAL LAYOUT AND INSTALLATION OF PIPING IN FIELD AND COORDINATE WITH OTHER TRADES AS REQUIRED. ALL PIPING INSTALLATIONS SHALL BE IN ACCORDANCE WITH APPLICABLE PLUMBING CODES AND STANDARDS.

RVE 1901
REMINGTON & VERNICK ENGINEERS
2059 SPRINGDALE ROAD
CHERRY HILL, NJ 08003
(856) 795-9595, FAX (856) 795-1882
WEB ADDRESS : RVE.COM
Certification of Authorization: 24 GA 28003300
Excellence • Innovation • Service

Dennis K Yoder
DATE: 02-17-2025
DENNIS K. YODER
NJ PROFESSIONAL ENGINEER LIC. No. 31866

PLANS WHICH DO NOT BEAR AN EMBOSSED SEAL ARE NOT VALID.

No.	REVISION	DATE	BY	CHK
1	ELSA PRELIMINARY REVIEW	5-4-24	B.Z.	M.G.
2	ELSA FINAL REVIEW	11-4-24	B.Z.	M.G.

PLUMBING UTILITY PIPING FLOOR PLAN

EWING LAWRANCE SEWAGE AUTHORITY

ELSA VEHICLE STORAGE BUILDING

TOWNSHIP OF LAWRENCE MERCER COUNTY NEW JERSEY

DRAWN BY	DESIGN BY	CHECKED BY	SCALE
B.Z.	M.G.		AS NOTED
DATE: 10.2023		SHEET No.: P-3.1	
JOB No.: 1102M026			

P:\Projects\Mercer County\1102M026\Drawings\P-3.1 Plumbing Utility Piping Floor Plan.dwg 2/18/2025 7:15:25 AM

P:\Projects\Mercer County\1102M026\Drawings\P-3.1 Plumbing Utility Piping Floor Plan.dwg

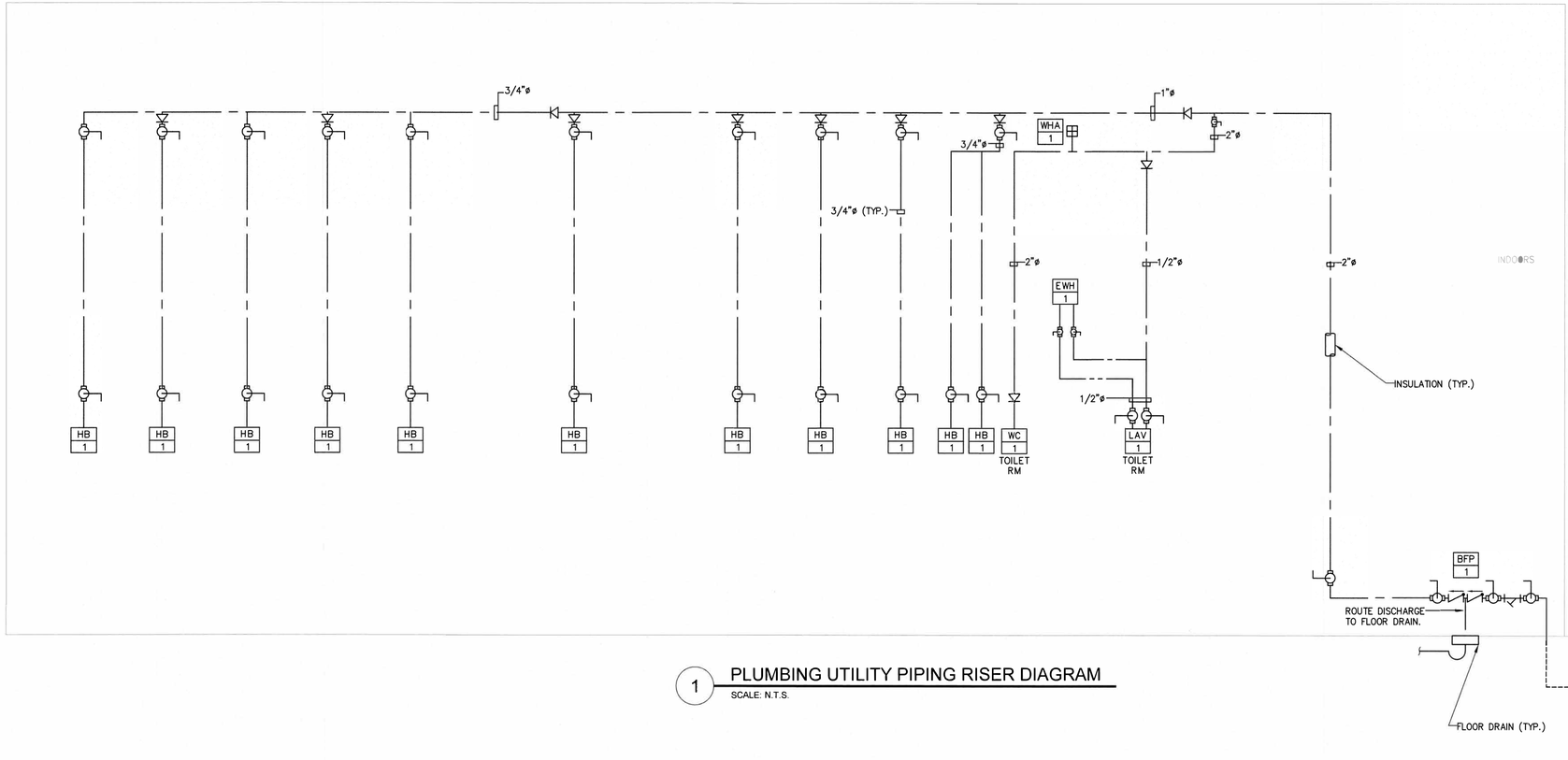

1 PLUMBING UTILITY PIPING RISER DIAGRAM

SCALE: N.T.S.

UTILITY NOTES:

1. ALL NOTES, SYMBOLS, AND ABBREVIATIONS ON DRAWING M-1.0 APPLY TO THIS DRAWING.
2. NOT ALL PIPE SIZES AND IN-LINE DEVICES ARE SHOWN FOR CLARITY, SEE THE DETAIL SHEET(S) FOR ADDITIONAL INFORMATION. THE CONTRACTOR SHALL PROVIDE ALL REDUCERS, VALVES, ETC. AS REQUIRED TO COMPLETE THE NEW WORK EVEN IF NOT SPECIFICALLY SHOWN ON THE PLAN, RISER, OR DETAIL DRAWINGS.
3. DOMESTIC WATER PIPING SHALL BE TYPE L COPPER TUBE WITH SOLDERED JOINTS/FITTINGS.
4. COORDINATE PIPING LAYOUTS IN ALL AREAS WITH OTHER TRADES PRIOR TO INSTALLATION TO AVOID INTERFERENCES.
5. PROVIDE LINE SIZE SHUT-OFF VALVES IN BRANCH LINES WHERE BRANCH LINES CONNECT TO MAINS.

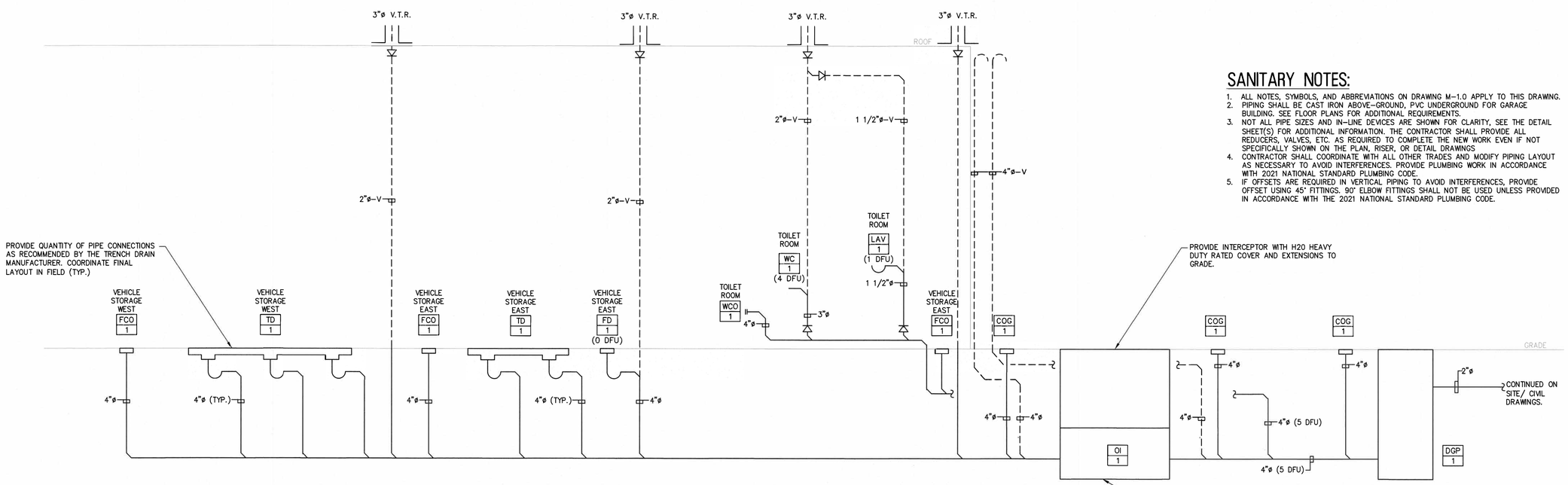

2 PLUMBING SANITARY PIPING RISER DIAGRAM

SCALE: N.T.S.

SANITARY NOTES:

1. ALL NOTES, SYMBOLS, AND ABBREVIATIONS ON DRAWING M-1.0 APPLY TO THIS DRAWING.
2. PIPING SHALL BE CAST IRON ABOVE-GROUND, PVC UNDERGROUND FOR GARAGE BUILDING. SEE FLOOR PLANS FOR ADDITIONAL REQUIREMENTS.
3. NOT ALL PIPE SIZES AND IN-LINE DEVICES ARE SHOWN FOR CLARITY, SEE THE DETAIL SHEET(S) FOR ADDITIONAL INFORMATION. THE CONTRACTOR SHALL PROVIDE ALL REDUCERS, VALVES, ETC. AS REQUIRED TO COMPLETE THE NEW WORK EVEN IF NOT SPECIFICALLY SHOWN ON THE PLAN, RISER, OR DETAIL DRAWINGS
4. CONTRACTOR SHALL COORDINATE WITH ALL OTHER TRADES AND MODIFY PIPING LAYOUT AS NECESSARY TO AVOID INTERFERENCES. PROVIDE PLUMBING WORK IN ACCORDANCE WITH 2021 NATIONAL STANDARD PLUMBING CODE.
5. IF OFFSETS ARE REQUIRED IN VERTICAL PIPING TO AVOID INTERFERENCES, PROVIDE OFFSET USING 45° FITTINGS. 90° ELBOW FITTINGS SHALL NOT BE USED UNLESS PROVIDED IN ACCORDANCE WITH THE 2021 NATIONAL STANDARD PLUMBING CODE.

RVE 1901
REMINGTON & VERNICK ENGINEERS
2059 SPRINGDALE ROAD
CHERRY HILL, NJ 08003
(856) 795-9595, FAX (856) 795-1882
WEB ADDRESS : RVE.COM
Certification of Authorization: 24 GA 28003300
Excellence • Innovation • Service

Dennis K Yoder
DATE: 02-17-2025
DENNIS K. YODER
NJ PROFESSIONAL ENGINEER LIC. No. 31866

PLANS WHICH DO NOT BEAR AN EMBOSSED SEAL ARE NOT VALID.

No.	REVISION	DATE	BY	CHK
1	ELSA PRELIMINARY REVIEW	6-4-24	B.Z.	M.G.
2	ELSA FINAL REVIEW	11-4-24	B.Z.	M.G.

PLUMBING RISER DIAGRAMS

EWING LAWRANCE SEWAGE AUTHORITY

ELSA VEHICLE STORAGE BUILDING

TOWNSHIP OF LAWRENCE — MERCER COUNTY — NEW JERSEY

DRAWN BY:	DESIGN BY:	CHECKED BY:	SCALE:
B.Z.	M.G.		AS NOTED
DATE: 10.2023			SHEET No.: P-4.1
JOB No.: 1102M026			

P:\Projects\Mercer County\1102M026\Sheets\P-4.1 Plumbing Riser Diagrams.dwg 2/18/2025 7:15:48 AM

P:\Projects\Mercer County\1102M026\Sheets\P-4.1 Plumbing Riser Diagrams.dwg

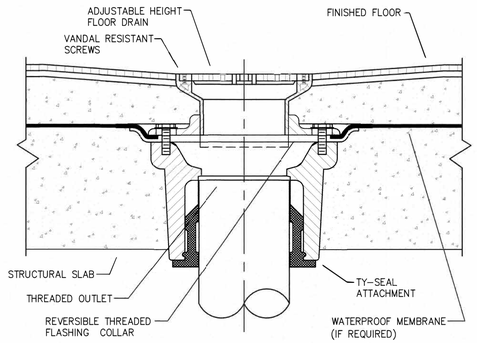

FLOOR DRAIN DETAIL

N.T.S.

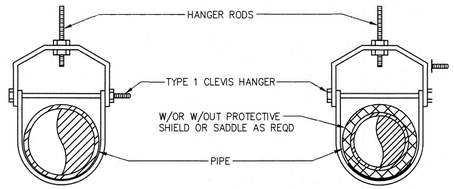

NOTES:
1. INSTALL PLUMB.
2. BORE OF WASHER OR SPRING RETAINER TO BE SAME SIZE AS ROD.
3. WELD WASHER OR SPRING RETAINER TO ROD.

SINGLE PIPE TYPE 1 CLEVIS HANGER

N.T.S.

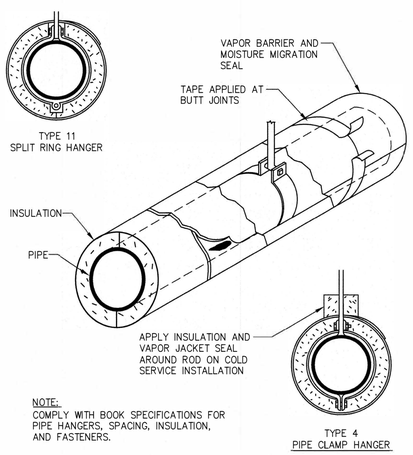

NOTE:
COMPLY WITH BOOK SPECIFICATIONS FOR PIPE HANGERS, SPACING, INSULATION, AND FASTENERS.

HANGER, INSULATION AND VAPOR JACKET DETAIL

N.T.S.

NOTE:
WHERE PIPING IS EXPOSED AT FINISH WALLS, FLUSH MOUNT SLEEVE AND PROVIDE ESCUTCHEON PLATE.

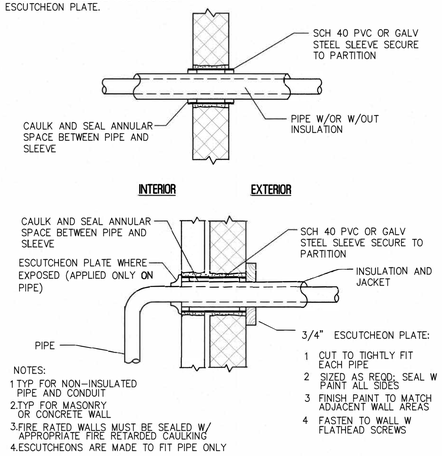

NOTES:
1. TYP FOR NON-INSULATED PIPE AND CONDUIT
2. TYP FOR MASONRY OR CONCRETE WALL
3. FIRE RATED WALLS MUST BE SEALED W/ APPROPRIATE FIRE RETARDED CAULKING
4. ESCUTCHEONS ARE MADE TO FIT PIPE ONLY

PIPE PENETRATION THRU WALLS

N.T.S.

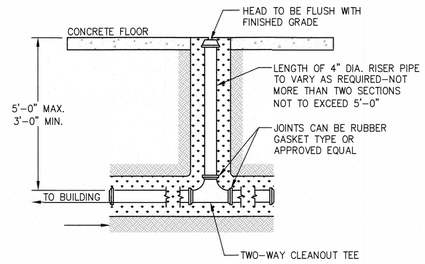

STANDARD CLEANOUT DETAIL

N.T.S.

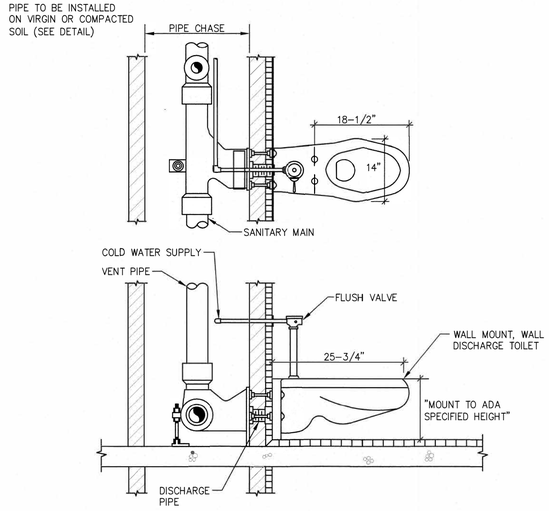

NOTE:
ALL PIPING FOR WC AND UR IS TO BE BEHIND WALL.

REAR MOUNTED ON-THE-WALL WATER CLOSET DETAIL

N.T.S.

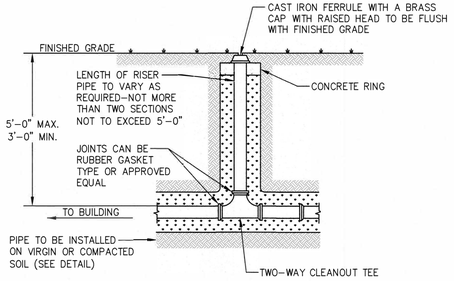

CLEANOUT TO GRADE DETAIL

N.T.S.

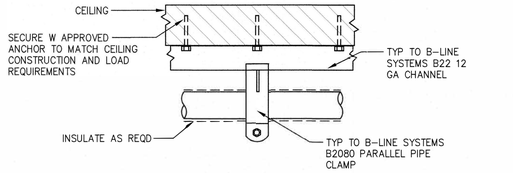

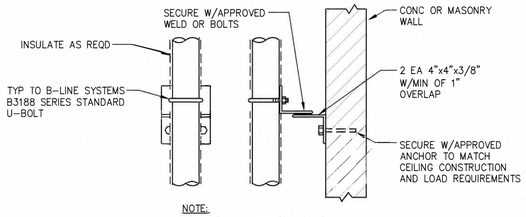

NOTE:
PROVIDE MIN ANCHOR SUPPORT SPACING EVERY 3' VERTICALLY

WALL AND CEILING CONDUIT AND PIPE BRACKET SUPPORTS

N.T.S.

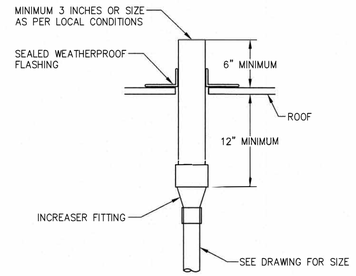

ROOF VENT PENETRATION DETAIL

N.T.S.

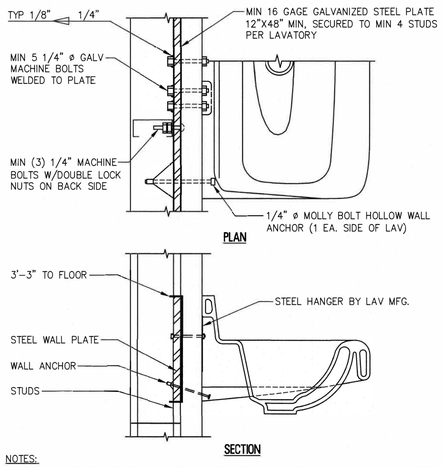

NOTES:
1. AT LAVS WITH FLOOR PEDAL CONTROLS, PROVIDE AN ADDITIONAL 16 GAGE GALVANIZED STEEL PLATE 12"X16" SECURED TO A MINIMUM 2 STUDS FOR FOOT PEDAL. PROVIDE 20 GAGE STUDS WHEN HEIGHT EXCEEDS 12'-0".

LAVATORY MOUNTING DETAIL

SCALE: N.T.S.

RVE 1901
REMINGTON & VERNICK ENGINEERS
2059 SPRINGDALE ROAD
CHERRY HILL, NJ 08003
(856) 795-9595, FAX (856) 795-1882
WEB ADDRESS : RVE.COM
Certification of Authorization: 24 GA 28003300
Excellence • Innovation • Service

Dennis K Yoder
DATE: 02-17-2025
DENNIS K. YODER
NJ PROFESSIONAL ENGINEER LIC. No. 31866

No.	REVISION	DATE	BY	CHK
1	ELSA PRELIMINARY REVIEW	5-4-24	B.Z.	M.G.
2	ELSA FINAL REVIEW	11-4-24	B.Z.	M.G.

PLUMBING DETAILS

EWING LAWRANCE SEWAGE AUTHORITY
ELSA VEHICLE STORAGE BUILDING
TOWNSHIP OF LAWRENCE — MERCER COUNTY — NEW JERSEY

DRAWN BY	DESIGN BY	CHECKED BY	SCALE
B.Z.	M.G.		AS NOTED

DATE: 10.2023
JOB No.: 1102M026
SHEET No.: P-5.1

P:\Projects\Mercer County\1102M026\Sheets\P-5.1 Plumbing Details.dwg 2/18/2025 7:15:52 AM

P:\Projects\Mercer County\1102M026\Sheets\P-5.1 Plumbing Details.dwg

PLUMBING FIXTURE SCHEDULE

TAG	FIXTURE	DESCRIPTION	MANUF.	MODEL	MANUF.	ACCESSORY (NOTES 1,2)	MINIMUM CONNECTION SIZE (IN.) COLD	HOT	DRAIN	VENT	WATER SUPPLY FIXTURE UNITS (WSFU's)	DRAINAGE FIXTURE UNITS (DFU's)
BFP–1	BACKFLOW PREVENTER	REDUCED PRESSURE ZONE ASSEMBLY	WATTS	LF909	WATTS	QUARTER TURN BALL VALVES (QT), BRONZE STRAINER (S)	2	N/A	N/A	N/A	N/A	N/A
COG–1	CLEANOUT ON GRADE	OUTDOOR, CLEANOUT ON GRADE	ZURN	Z1474	ZURN	G–VP	N/A	N/A	LINE	N/A	N/A	N/A
FCO–1	FLOOR CLEANOUT	HEAVY DUTY ADJUSTABLE FLOOR CLEANOUT	ZURN	Z1400	ZURN	ZN, VP	N/A	N/A	LINE	N/A	N/A	N/A
FD–1	FLOOR DRAIN	SQUARE CAST IRON FLOOR DRAIN	ZURN	Z415S	ZURN	ZN, VP, 8" SQ. STRAINER, DEEP SEAL TRAP	N/A	N/A	4	2	N/A	0.0
HB–1	HOSE BIBB	NO–KINK COPPER ALLOY BRONZE HOSE BIBB	NIBCO	HOSE BIBB	WATTS	SERIES 8 VACUUM BREAKER	3/4	N/A	N/A	N/A	N/A	N/A
LAV–1	LAVATORY SINK	WALL HUNG VITREOUS CHINA LAVATORY	ZURN ONE SYSTEM	Z5314.494.3.01.41.5	ZURN	4" CENTERSET Z86500–XL–RKR METERING FAUCET, ADA TRAP PROTECTOR, SUPPLY STOPS, P–TRAP	1/2	1/2	1 1/2	1 1/2	1.0	1.0
OI–1	OIL INTERCEPTOR	FABRICATED STEEL 250 GPM OIL INTERCEPTOR WITH DOUBLE WALL TRAP, INTERNAL FLOW CONTROL, WITH INTEGRAL STORAGE TANK	WADE	5500–25 GPM	WADE	ANCHOR FLANGE, H–20 LOAD RATED COVER, EXTENSION, OIL TANK SENSOR PROBE/ALARM, OIL TANK DOUBLE WALL CONSTRUCTION, PUMP OUT CONNECTION, CLEANOUTS, 65.0 GAL STORAGE CAPACITY	N/A	N/A	4	4	N/A	N/A
TD–1	TRENCH DRAIN	HIGH DENSITY 6" WIDE TRENCH DRAIN WITH PAINTED DUCTILE IRON ADA SLOTTED GRATE & FRAME	WADE	WN900–HPDLP	WADE	H–20 RATED COVER, PROVIDE SLOPED SECTIONS PER MANUF. RECOMMENDATIONS	N/A	N/A	4	N/A	N/A	N/A
WC–1	WATER CLOSET	ELONGATED 1.6 GPF WALL MOUNTED WATER CLOSET W/MANUAL EXPOSED FLUSH VALVE	ZURN	Z5615 – BWL	ZURN	MANUAL EXPOSED FLUSH VALVE Z6000AV–WS1, ELONGATED TOILET SEAT, EXTENDED ACORN NUT/WASHER KIT, CARRIER	1	N/A	3	2	5.0	4.0
WCO–1	WALL CLEAN OUT	WALL CLEAN OUT FERRULE AND COVER	ZURN	Z1440/Z1469	ZURN	ZAB–VP	N/A	N/A	LINE	N/A	N/A	N/A
WHA–1	WATER HAMMER ARRESTOR	INLINE WATER HAMMER ARRESTOR	WILKINS/ZURN	1250XL–A	N/A	NOTE 4	VARIES	N/A	N/A	N/A	N/A	N/A

NOTES
1. COLOR/FINISH TO BE AS APPROVED BY THE OWNER.
2. PROVIDE ALL ACCESSORIES REQUIRED TO OPERATE AND PROPERLY INSTALL FIXTURES. INSTALL FIXTURES IN ACCORDANCE WITH THE MANUFACTURES RECOMMENDATIONS AND ALL APPLICABLE CODES. COORDINATE FIXTURE DIMENSIONS WITH STRUCTURAL DRAWINGS.
3. PROVIDE ACCESS PANELS FOR WATER HAMMER ARRESTORS AS RECOMMENDED BY MANUFACTURER.

DUPLEX GRINDER PUMP SCHEDULE

TAG	TYPE	SERVICE	PUMP TYPE	PUMP QTY	FLUID TYPE	FLOW RATE (GPM)	TDH (ft)	MOTOR HP/EA	ELECTRICAL (V / Hz / ph)	FLA (PER PUMP)	BASIS OF DESIGN MANUFACTURER	MODEL	NOTES
DGP–1	DUPLEX GRINDER PUMP	VEHICLE STORAGE BUILDING SANITARY	CAST IRON SUBMERSIBLE	2	SANITARY SEWAGE	38	40	2	208/3/60	10.6	LIBERTY	D3684LSG203	SEE BELOW

1. PROVIDE COMPLETE PACKAGED AND PREASSEMBLED DUPLEX PUMPING SYSTEM. PROVIDE ALL ACCESSORIES REQUIRED FOR A COMPLETE AND OPERATIONAL SYSTEM.
2. PROVIDE 4–INCH INLET HUB WITH RUBBER PIPE SEAL.
3. PROVIDE WITH SCHEDULE 80 PVC 2–INCH DISCHARGE PIPING WITH UNIION, CHECK VALVE AND BALL VALVE.
4. PROVIDE CONTINUOUS DUTY MOTORS WITH CAST IRON MOTOR CASING.
5. PROVIDE 25' POWER CABLE FROM CONTROL PANEL TO GRINDER PUMP.
6. PROVIDE WITH FACTORY PRE–ASSEMBLED STAINLESS STEEL GUIDE RAIL AND STAINLESS STEEL CHAIN FOR PUMP LIFT OUT.
7. PROVIDE 36" DIAMETER X 84" DEEP FIBERGLASS BASIN WITH FIBERGLASS ENCAPSULATED STEEL ANTI–FLOTATION COLLAR. PROVIDE WITH SOLID STEEL PAINTED COVER.
8. PROVIDE WITH PRE–MOUNTED STAINLESS STEEL SUPPORTS AND BRACKETS.
9. PROVIDE IP SERIES PROGRAMMABLE NEMA 4X DUPLEX ALTERNATING PUMP STATION CONTROL PANEL. PROVIDE PANEL WITH FLOATS, AUX. CONTACTS, AND INTEGRAL AUDIO & VISUAL HIGH LEVEL ALARM.
10. PROVIDE WITH PRE–MOUNTED NEMA 4X JUNCTION BOX FOR ELECTRICAL CONNECTIONS.
11. INSTALL FLOAT SWITCHES AT THE FOLLOWING ELEVATIONS (ALL ELEVATIONS MEASURED FROM THE BOTTOM OF BASIN): PUMP OFF: 1'–1", PUMP ON: 2'–10", ALARM: 3'–4".

INSTANTANEOUS ELECTRIC HOT WATER HEATER SCHEDULE

TAG	MANUF.	MODEL	KW	FLOW (GPM)	ELECTRICAL (V/ PH / HZ)	AMPS	TEMP. RISE (DEG. F.)	COLD WATER INLET (IN.)	HOT WATER OUTLET (IN.)	NOTES
EWH–1	EEMAX	SPEX4208T–N4X	4.1	0.5	208/1/60	20	56	3/8	3/8	SEE BELOW

NOTES: 1. PROVIDE WITH AERATOR, REPLACEABLE FILTER, NICKEL/CHROME ELEMENT, FIVE (5) YEAR WARRANTY AND NEMA 4 STAINLESS STEEL CORROSION RESISTANT CABINET.

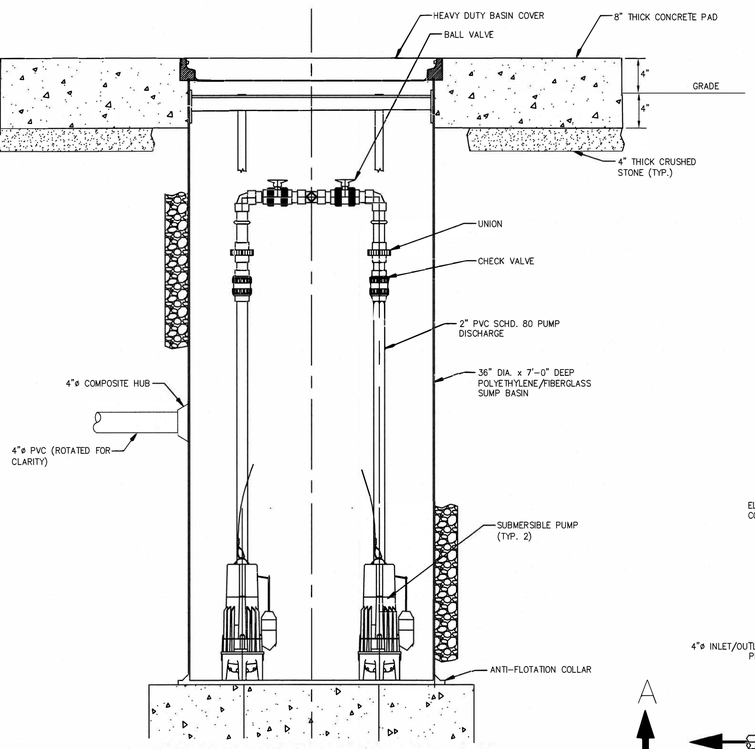

3 SECTION B-B (DUPLEX GRINDER PUMP)
N.T.S.

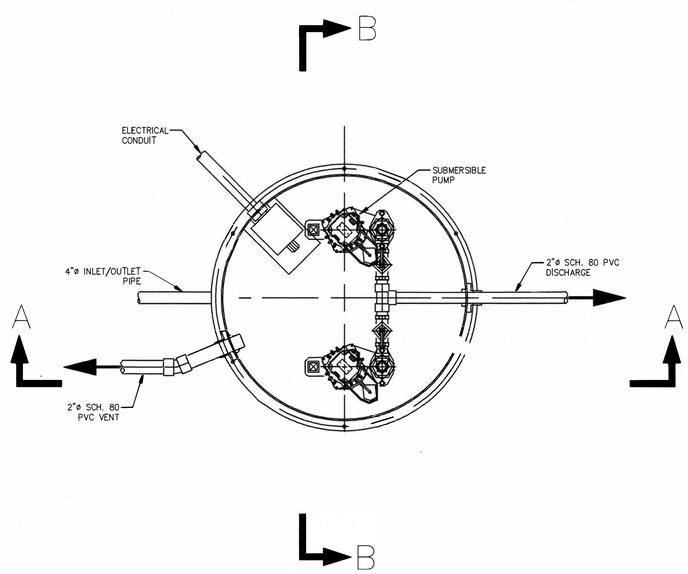

1 PLAN VIEW - BELOW GRADE (DUPLEX GRINDER PUMP)
N.T.S.

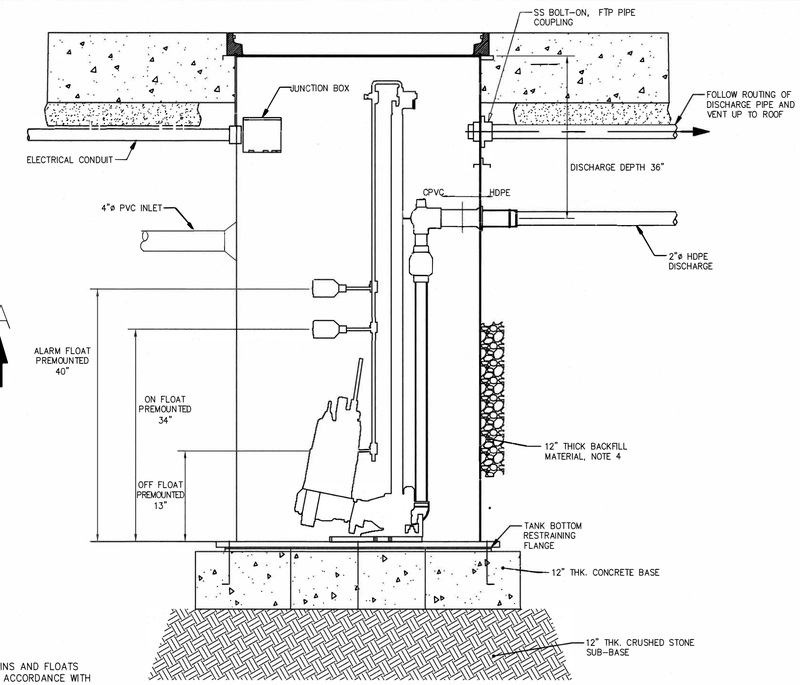

2 SECTION A-A (DUPLEX GRINDER PUMP)
N.T.S.

NOTES:

1. PROVIDE LIFTING CHAINS AND FLOATS WITH PUMP PACKAGE. LIFTING CHAINS AND FLOATS ARE NOT SHOWN FOR CLARITY PURPOSES. INSTALL CHAIN AND FLOAT IN ACCORDANCE WITH THE MANUFACTURER'S RECOMMENDATIONS.
2. INSTALL DUPLEX PUMP STATION IN ACCORDANCE WITH THE MANUFACTURER'S RECOMMENDATIONS. PROVIDE ALL ACCESSORIES REQUIRED FOR INSTALLATION AND OPERATION.
3. CONTRACTOR SHALL VERIFY ALL DIMENSIONS IN THE FIELD PRIOR TO PLACING ORDER FOR PUMP STATION.
4. BACKFILL MATERIAL SHALL BE CRUSHED ROCK. CRUSHED ROCK SHALL BE WASHED AND FREE FLOWING ANGULAR PARTICLES BETWEEN 1/8" AND 1/2" IN SIZE.
5. COORDINATE FLOAT CONTROL ELEVATIONS IN FIELD. PROVIDE AS RECOMMENDED BY MANUFACTURER.
6. INSTALL BASIN COVER IN ACCORDANCE WITH THE MANUFACTURER'S RECOMMENDATIONS TO SUPPORT RATED LOADING.

RVE 1901
REMINGTON & VERNICK ENGINEERS
2059 SPRINGDALE ROAD
CHERRY HILL, NJ 08003
(856) 795-9595, FAX (856) 795-1882
WEB ADDRESS : RVE.COM
Certification of Authorization: 24 GA 28003300
Excellence • Innovation • Service

DATE: 02-17-2025
DENNIS K. YODER
NJ PROFESSIONAL ENGINEER LIC. No. 31866

No	REVISION	DATE	BY	CHK
1	ELSA PRELIMINARY REVIEW	6-4-24	B.Z.	M.G.
2	ELSA FINAL REVIEW	11-4-24	B.Z.	M.G.

PLUMBING DETAILS AND SCHEDULES

EWING LAWRANCE SEWAGE AUTHORITY
ELSA VEHICLE STORAGE BUILDING
TOWNSHIP OF LAWRENCE MERCER COUNTY NEW JERSEY

DRAWN BY	DESIGN BY	CHECKED BY	SCALE
B.Z.	M.G.		AS NOTED
DATE: 10.2023			SHEET No.: P-6.1
JOB No.: 1102M026			

P:\Projects\Mercer County\1102M026\Sheets\P-6.1 Plumbing Schedules.dwg

P:\Projects\Mercer County\1102M026\Sheets\P-6.1 Plumbing Schedules.dwg 2/18/2025 7:15:15 AM

ELECTRICAL SYMBOLS

(ALL SYMBOLS MAY NOT BE USED ON THIS PROJECT)

- A — 2'x4' LED LIGHT FIXTURE (A – INDICATES FIXTURE TYPE)
- AE — 2'x4' EMERGENCY LED LIGHT FIXTURE (AE – INDICATES FIXTURE TYPE)
- A — 2'x2' LED LIGHT FIXTURE
- 2'x2' EMERGENCY LED LIGHT FIXTURE
- 5"x4' LED LIGHT FIXTURE
- 5"x4' EMERGENCY LED LIGHT FIXTURE
- DOWNLIGHT LIGHT FIXTURE
- EMERGENCY DOWNLIGHT LIGHT FIXTURE
- WALL MOUNTED LIGHT FIXTURE
- WALL MOUNTED EMERGENCY LIGHT FIXTURE
- EXIT SIGN (SHADED AREA INDICATES FACE) (ARROW INDICATES DIRECTION) (XW – WALL MOUNTED) (XC – CEILING MOUNTED)
- DUAL HEAD EMERGENCY BATTERY BACKUP
- DUAL REMOTE HEADS
- S — SWITCH, SINGLE POLE TOGGLE
- S_3 — SWITCH, 3–WAY TOGGLE
- S_4 — SWITCH, 4–WAY TOGGLE
- S_D — SWITCH, DIMMER
- S_K — SWITCH, KEY OPERATED
- S_P — SWITCH, PILOT LIGHT
- S_L — SWITCH, LOW VOLTAGE
- S_M — FRACTIONAL HP STARTER
- OS — OCCUPANCY SENSOR – P – PASSIVE INFRARED, U – ULTRASONIC, D – DUAL TECHNOLOGY
- SITE LIGHT
- UTILITY POLE
- DLS — DAYLIGHT SENSOR
- RECEPTACLE, DUPLEX – (K – KEY LOCKING STEEL COVER) (S – SURGE PROTECTOR) (L – LOCKING COVER) (+ – MOUNT 8" ABOVE COUNTERTOP) (T – TAMPER PROOF) (U – DUPLEX WITH USB PORT)
- RECEPTACLE, QUAD
- RECEPTACLE, SINGLE
- GFI — RECEPTACLE, GFI – (WP–WEATHERPROOF IN–USE COVER)
- RECEPTACLE, EMERGENCY
- RECEPTACLE, SPECIAL (NEMA CONFIGURATION INDICATED)
- RECEPTACLE, DUPLEX FLOOR MOUNT (POKE–THRU)
- C — RECEPTACLE, CEILING MOUNTED
- FLOOR BOX WITH (2) DUPLEX RECEPTACLES
- TV — DUPLEX RECEPTACLE AND CATV RECEPTACLE
- J — JUNCTION BOX
- J — JUNCTION BOX, FLOOR MOUNTED
- J_T — JUNCTION BOX, TELEPHONE
- J_D — JUNCTION BOX, DATA
- J_{TD} — JUNCTION BOX, TELEPHONE/DATA
- J_P — JUNCTION BOX, POWER
- T — ELECTRIC FLUSH VALVE TRANSFORMER JUNCTION BOX – ABOVE CEILING
- PANEL BOARD – SURFACE MOUNTED
- PANEL BOARD – FLUSH MOUNTED
- CIRCUIT BREAKER IN ENCLOSURE
- CIRCUIT BREAKER
- LOW VOLTAGE DRAWOUT BREAKER
- MEDIUM VOLTAGE DRAWOUT BREAKER
- DELTA CONFIGURATION
- WYE CONFIGURATION
- ----E---- ELECTRICALLY INTERLOCKED
- M — ELECTRIC UTILITY METER
- IDF — INTERMEDIATE DISTRIBUTION FRAME
- MDF — MAIN DISTRIBUTION FRAME
- CURRENT TRANSFORMER
- GENERATOR
- TRANSFORMER
- POTENTIAL TRANSFORMER

- MV SWITCH GEAR
- GROUND ROD (10' x 3/4")
- MOTOR
- XXX/XXX/XX — NON–FUSED DISCONNECT SWITCH – XXX/XXX/XX – INDICATES (RATED FRAME AMPS/VOLTS/# OF POLES)
- XXX/XXX/XXX/XX — FUSED DISCONNECT SWITCH XXX/XXX/XXX/XX – INDICATES (RATED FRAME AMPS/FUSE AMPS/VOLTS/# OF POLES)
- COMBINATION STARTER/DISCONNECT SWITCH
- MAGNETIC STARTER
- K — KEY OPERATED CONTROL STATION
- C — MAGNETIC CONTACTOR
- PC — PHOTOCELL
- TC — TIME CLOCK SWITCH
- R — RELAY
- D — HAND DRYER
- GROUNDING ELECTRODE
- NON FUSED DISCONNECT SWITCH
- FUSED DISCONNECT SWITCH
- FUSED POTENTIAL TRANSFORMER
- AUTOMATIC TRANSFER SWITCH, L – LOAD, N – NORMAL POWER, E – EMERGENCY POWER
- LA — LIGHTNING ARRESTER
- SPD — SURGE PROTECTIVE DEVICE WITH DISCONNECT
- HEAT TRACE CABLING
- RESISTOR TEMPERATURE DEVICE
- EXPOSED RACEWAY
- LOW VOLTAGE WIRING
- CONDUIT CONCEALED IN WALLS OR CEILING
- EM — EMERGENCY CIRCUIT
- CONDUIT CONCEALED IN OR UNDER FLOOR OR UNDERGROUND
- NS — NON–SWITCHED CIRCUIT
- HOMERUN – CIRCUIT & PANEL AS INDICATED (2#12 + 1#12G, 3/4"C, UNLESS OTHERWISE NOTED)
- CT — CABLE TRAY
- W — SURFACE RACEWAY, WIREMOLD
- F — FIRE ALARM PULL STATION
- 30cd F — FIRE ALARM STROBE LIGHT – (XXcd – CANDELA RATING)
- F C — FIRE ALARM SPEAKER (SUBSCRIPT 'C' INDICATE CEILING MOUNTED)
- F — FIRE ALARM/BELL
- 30cd F C — COMBINATION FIRE ALARM SPEAKER/STROBE – (XXcd – CANDELA RATING) (CEILING)
- 30cd — COMBINATION FIRE ALARM SPEAKER/STROBE – (XXcd – CANDELA RATING)
- B — FIRE ALARM CODE BLUE
- S — PHOTO–ELECTRIC TYPE SMOKE DETECTOR
- H AC — HEAT DETECTOR (COMBINATION FT/RR U.O.N., AC–ABOVE CEILING.)
- HS — COMBINATION HEAT/SMOKE DETECTOR
- S D — PHOTO–ELECTRIC TYPE DUCT SMOKE DETECTOR
- FACP — FIRE ALARM CONTROL PANEL

- NO2 — NITROGEN DIOXIDE DETECTOR
- CO2 — CARBON DIOXIDE DETECTOR
- C — EMERGENCY GAS SHUTOFF
- B — EMERGENCY BOILER SHUTOFF
- EMERGENCY ELECTRIC SHUTOFF
- K — REMOTE KEY PAD
- DL — ELECTRONIC DOOR LOCK
- M — MAGNETIC DOOR HOLDER
- KF — KEY FOB
- PANIC ALARM BUTTON
- SECURITY/VIDEO CAMERA (WP – WEATHERPROOF) (PTZ – PAN, TILT, ZOOM)
- WOS — WIRELESS OCCUPANCY SENSOR
- WRS — WIRELESS RELAY SWITCH
- WAC — WIRELESS ACCESS CONTROL
- WAP — WIRELESS ACCESS POINT
- CR — CARD READER
- DC — ELECTRONIC DOOR CONTACT
- RX — REQUEST TO EXIT
- IR — INFRARED SENSOR
- MS — MOTION SENSOR
- AI — AIR PHONE INTERCOM SYSTEM
- CCTV CAMERA ASSEMBLY W/ DOME COVER
- DUAL CCTV CAMERA ASSEMBLY W/ DOME COVER
- SECURITY MOTION SENSOR
- VOIP OUTLET
- 6 — DATA OUTLET – (6 – # OF DROPS)
- COMBINATION VOIP AND DATA OUTLET
- SOUND SYSTEM WALL PHONE
- S — MASS NOTIFICATION SPEAKER
- S — SPEAKER – CEILING MOUNTED
- S — SPEAKER – WALL MOUNTED
- S C — CLOCK/SPEAKER – WALL MOUNTED
- M — MICROPHONE
- SV — SOUND VOLUME CONTROL
- IC — INTERCOM
- CLOCK/SPEAKER BAFFLE
- WP — HORN LOUDSPEAKER (WP – WEATHERPROOF)
- C — WALL MOUNTED CLOCK
- BEAM DETECTOR
- PRISM REFLECTOR
- MOTOR STARTER WITH THERMAL OVERLOAD RELAY
- INDICATES EXISTING TO BE DEMOLISHED
- DENOTES POINT OF CONNECTION OF EXISTING TO NEW
- XX X — EQUIPMENT DESIGNATION TAG
- SITE LIGHTING (MUSCO LIGHTING SYSTEM)

ELECTRICAL SHEET INDEX

SHEET No.	DESCRIPTION
E-1.0	ELECTRICAL COVER SHEET
ES-2.1	ELECTRICAL SITE PLAN
E-2.1	ELECTRICAL LIGHTING PLAN
E-3.1	ELECTRICAL POWER PLAN
E-3.2	ELECTRICAL HVAC POWER PLAN
E-3.3	ELECTRICAL LIGHTNING AND ELEVATION PLAN
E-4.1	ELECTRICAL SYSTEMS PLAN
E-5.1	FIRE ALARM DETAILS
E-6.1	ELECTRICAL DETAILS AND SCHEDULES
E-6.2	ELECTRICAL DETAILS

ABBREVIATIONS

%	PERCENT
&	AND
ø, PH	PHASE
°C.	CENTIGRADE DEGREES
°F.	FAHRENHEIT DEGREES
1/C	SINGLE CONDUCTOR
A.I.C.	AMPERES INTERRUPTING CAPACITY
A.T.C.	AUTOMATIC TEMPERATURE CONTROL
A.T.S.	AUTOMATIC TRANSFER SWITCH
A/C.	AIR CONDITION
AC	ALTERNATING CURRENT
ADDL.	ADDITIONAL
AF	AMPERE FRAME
A–F	AMPERE FUSE
AFCI	ARC FAULT CIRCUIT INTERRUPTER
AFF/A.F.F.	ABOVE FINISHED FLOOR
AFG/A.F.G.	ABOVE FINISHED GRADE
AHU	AIR HANDLING UNIT
AL.	ALUMINUM
AMP., A.	AMPERE
APPROX.	APPROXIMATE
ARCH.	ARCHITECTURAL
AT	AMPERE TRIP
ASY.	ASYMMETRICAL
AUX.	AUXILIARY
B.F.C.	BELOW FINISHED CEILING
BKR.	BREAKER
BLDG.	BUILDING
BSMT.	BASEMENT
C/C.	CONDUIT
C OF U/CFU	COEFFICIENT OF UTILIZATION
C.T., CT	CURRENT TRANSFORMER
CB, CIR. BKR., C/B	CIRCUIT BREAKER
CCTV	CLOSED CIRCUIT TELEVISION
CKT., CIR, CIRC.	CIRCUIT
CL	CLOSET
CLG.	CEILING
CO./Co.	COMPANY
COAX.	COAXIAL CABLE
COL.	COLUMN
COMP.	COMPLETE
CONC.	CONCRETE
CONDR.	CONDUCTOR
CONN	CONNECTED, CONNECTOR
CONST.	CONSTRUCTION
CONT.	CONTINUATION
CONTR.	CONTRACTOR
COORD.	COORDINATE
CORR.	CORRIDOR
CPU	CENTRAL PROCESSING UNIT
Cu	COPPER
CU	CONDENSING UNIT
CU. FT.	CUBIC FEET
CW	CLOCKWISE
D	DEPTH
DEM	DEMAND
DIA.	DIAMETER
DISC.	DISCONNECT SWITCH
DIV.	DIVISION
DN.	DOWN
DPST	DOUBLE POLE SINGLE THROW
DRAW., DWG.	DRAWING
E.C.	ELECTRICAL CONTRACTOR
E.F., EF	EXHAUST FAN
E.H.	ELECTRIC HEATER
E.P.R.	ETHYLENE PROPYLENE RUBBER
E.W.	EACH WAY
EA.	EACH
EHT	ELECTRICAL HEAT TRACING CABLE
ELEC. CLO.	ELECTRICAL CLOSET
ELEC./ELECT.	ELECTRIC
ELEV./EL.	ELEVATION/ELEVATOR
EM	EMERGENCY POWER PACK COMPLETE
EMT	ELECTRICAL METALLIC TUBING
ENCL.	ENCLOSURE
ENT.	ENTRANCE
EMERG.	EMERGENCY
EQUIP.	EQUIPMENT
EST.	ESTIMATE
EX./E	EXISTING
EXT.	EXTERNAL/EXTERIOR
E.O.	ELECTRICALLY OPERATED
F.A.	FIRE ALARM
FACP	FIRE ALARM CONTROL PANEL
F.E.	FIRE EXTINGUISHER
F.O.	FIBER OPTIC
FDN.	FOUNDATION
FIG.	FIGURE
FIN.	FINISH/FINISHED
FIXT.	FIXTURE
FL.	FLOOR
FLA	FULL LOAD AMPERES
FLEX.	FLEXIBLE
F.L.M.C.	FLEXIBLE LIQUIDTIGHT METALLIC CONDUIT
FLUOR.	FLUORESCENT
FC	FOOTCANDLE
FT	FAULT TRIP
FT.	FEET
FU.	FUSE/FUSED
G.C.	GENERAL CONTRACTOR
GA.	GAGE/GAUGE
GALV.	GALVANIZED
GEN.	GENERATOR
GFCI	GROUND FAULT CIRCUIT INTERRUPTER
GFI	GROUND FAULT INTERRUPTER
GRD, GND., G	GROUND
GRS, G.R.S.	GALVANIZED RIGID STEEL
GTD	GENERATOR TRANSFER DEVICE
H.I.D.	HIGH INTENSITY DISCHARGE
H.O.A.	HAND OFF AUTO
H.P.S.	HIGH PRESSURE SODIUM
HEX.	HEXAGON
HH	HANDHOLE
HORIZ.	HORIZONTAL
H.P./HP.	HORSEPOWER
HPF	HIGH POWER FACTOR
HT.	HEIGHT
HWH	HOT WATER HEATER
HZ.	HERTZ
IMC	INTERMEDIATE CONDUIT
INC.	INCANDESCENT
INSUL.	INSULATION/INSULATED
ISOL.	ISOLATED
ISP	INTERNET SERVICE PROVIDER
IS	INTRINSICALLY SAFE
IT	INFORMATION TECHNOLOGY
IAP	INTRUSION ALARM PANEL
IAKP	INTRUSION ALARM KEYPAD
JB., J	JUNCTION BOX
KAIC	THOUSAND AMPERES INTERRUPTING CAPACITY
KVAR	KILOVAR
KO	KNOCKOUT
kW	KILOWATT
kCMIL	THOUSAND CIRCULAR MILS
KWH	KILOWATT HOUR
KHZ	KILOHERTZ
kV	KILOVOLT
kVA	KILOVOLT–AMPERE
LG.	LENGTH
LF.	LINEAR FEET
LG.	LONG
LRA	LOCKED ROTOR AMPERES
LT.	LIGHT
LTG.	LIGHTING
M.L.O.	MAIN LUGS ONLY
M/C	MULTI–CONDUCTOR
MANUF., MFR.	MANUFACTURER
MAX.	MAXIMUM
M.B./MB	MAIN BREAKER
M.C.B./MCB	MAIN CIRCUIT BREAKER
MCC	MOTOR CONTROL CENTER
MCM	THOUSAND CIRCULAR MILS
MDS	MAIN DISTRIBUTION SWITCHBOARD
MDP	MAIN DISTRIBUTION PANEL
MECH.	MECHANICAL
MET.	METALLIC
MF	MAINTENANCE FACTOR
MG	MOTOR GENERATOR
MIN.	MINIMUM
MISC.	MISCELLANEOUS
MTD.	MOUNTED
MTG.	MOUNTING
N	NEUTRAL
NC	NORMAL CLOSED
NEC/N.E.C.	NATIONAL ELECTRICAL CODE
NEMA	NATIONAL ELECTRICAL MANUFACTURER ASSOC.
N.I.C./NIC	NOT IN CONTRACT
NO	NORMALLY OPEN
No., #	NUMBER
N.T.S./NTS	NOT TO SCALE
NL	NIGHT LIGHT CIRCUT
N.F.	NON FUSED
P	POLE
PC	PHOTOCELL
P.I.L.C.	PAPER INSULATED LEAD COVERED
PB, P	PULL BOX, BREAKER OR SWITCH POLE
PNL.	PANELBOARD
PORC.	PORCELAIN
PRI.	PRIMARY
POE	POWER OVER ETHERNET
PTD.	PAINTED
PVC	POLYVINYLCHLORIDE
R	RADIUS
RAP	REMOTE ANNUNCIATOR PANEL
R.C.SW.	REMOTE CONTROL SWITCH
REBAR.	REINFORCING BAR
REC.	RECESSED, RECEPTACLE
RECEPT.	RECEPTACLES
REQ'D	REQUIRED
REV.	REVISE/REVISION
RF	RADIO FREQUENCY
RGA	REMOTE GENERATOR ANNUNCIATOR
RGS	RIGID GALVANIZED STEEL CONDUIT
RM.	ROOM
RT	ROOFTOP
S.F.	SQUARE FEET
S.S.	STAINLESS STEEL
SEC.	SECONDARY
SECT.	SECTION
SEP.	SEPARATE
SERV.	SERVICE
SHT.	SHEET
SIG.	SIGNAL
SK.	SKETCH
SN	SOLID NEUTRAL
SPECS.	SPECIFICATIONS
SPD	SURGE PROTECTIVE DEVICE
SQ.	SQUARE
SSRV	SOLID STATE REDUCED VOLTAGE STARTER
STA.	STATION
SURF.	SURFACE
SUSP.	SUSPENDED
SW.	SWITCH
SWBD.	SWITCHBOARD
SYM.	SYMMETRICAL
T.C./TC	TIME CLOCK
TEL.	TELEPHONE
THRU	THROUGH
TP	TWISTED PAIR
TRANS./XFMR	TRANSFORMER
TYP.	TYPICAL
U.O.N.	UNLESS OTHERWISE NOTED
UH	UNIT HEATER
UL	UNDERWRITING LABORATORIES
UPS	UNINTERRUPTIBLE POWER SOURCE
V	VOLTAGE, VOLTS
VD	VOLTAGE DROP
VERT.	VERTICAL
V.I.F./VIF	VERIFY IN FIELD
VS.	VERSUS
W	WIRE
W.I.	WROUGHT IRON
W/	WITH
W/O	WITHOUT
WD.	WIDE
WP	WEATHER PROOF
XLPE	CROSSLINKED POLYETHYLENE

STANDARD MOUNTING HEIGHTS

MOUNTING HEIGHTS FOR EQUIPMENT SHALL BE AS LISTED BELOW UNLESS OTHERWISE SPECIFICALLY LABELED. (UNLESS OTHERWISE NOTED, ALL DIMENSIONS ARE TO THE CENTERLINE OF BOXES.)

SWITCHES	3'–8" A.F.F.
TELEPHONE – WALL TYPE	3'–8" A.F.F.
TELEPHONE – DESK TYPE	1'–6" A.F.F.
RECEPTACLE – GENERAL OFFICE	1'–6" A.F.F.
RECEPTACLE – MECHANICAL ROOMS	3'–0" A.F.F.
FIRE ALARM GONG OR SPEAKER	6'–8" TO BOTTOM OF GONG OR SPEAKER
FIRE ALARM PULL STATION	3'–8" A.F.F. TO CENTER OF PULL
FIRE ALARM STROBE LIGHT	6'–8" A.F.F. TO BOTTOM OF STROBE
MOTION SENSOR	6'–5" A.F.F.
PANELBOARDS	6'–0" TO TOP OF CIRCUIT BREAKER MAX.
EXIT LIGHT	ABOVE DOORS (MIN. 7'–6" A.F.F. CLEAR)
KEY PAD (REMOTE)	3'–8" A.F.F.
DATA OUTLET	1'–6" A.F.F.
VOLUME CONTROL/CALL SWITCH	3'–8" A.F.F.
TIMER (NON–ADA)	4'–6" A.F.F.

WIRE & CONDUIT SIZING SCHEDULE

		WIRE SIZE (AWG/KCMIL)			NO. OF WIRES & CONDUIT SIZE IN INCHES		
AMPS	CKT. TYPE	CONDUCTOR & NEUTRAL	EQUIPMENT GROUND	SUPPLY SIDE BONDING JUMPER	A 2W+G	B 3W+G	C 4W+G
15	1	14	14	8	3/4	3/4	3/4
20	2	12	12	8	3/4	3/4	3/4
30	3	10	10	8	3/4	3/4	3/4
40	4	8	10	8	3/4	3/4	3/4
50	5	6	10	8	3/4	1	1
60	6	4	10	8	1	1–1/4	1–1/4
70	7	4	8	8	1	1–1/4	1–1/4
80	8	3	8	8	1–1/4	1–1/4	1–1/4
90	9	2	8	8	1–1/4	1–1/4	1–1/2
100	10	1	6	6	1–1/4	1–1/2	2
125	11	1	6	6	1–1/4	1–1/2	2
150	12	1/0	6	6	1–1/2	2	2
175	13	2/0	6	4	2	2	2
200	14	3/0	6	4	2	2	2–1/2
225	15	4/0	2	2	2	2–1/2	2–1/2
250	16	250 KCMIL	2	2	2	2–1/2	2–1/2
275	17	300 KCMIL	2	2	2	2–1/2	2–1/2
300	18	350 KCMIL	2	2	2	2–1/2	3
325	19	400 KCMIL	1/0	1/0	2	2–1/2	3
350	20	500 KCMIL	1/0	1/0	2–1/2	3	3–1/2
400	21	(2) 4/0	(2) 2	(2) 1/0	–––	(2) 2	(2) 2–1/2
500	22	(2) 250 KCMIL	(2) 2	(2) 1/0	–––	(2) 2	(2) 2–1/2
600	23	(2) 350 KCMIL	(2) 1	(2) 2/0	–––	(2) 2–1/2	(2) 3
700	24	(2) 500 KCMIL	(2) 1/0	(2) 2/0	–––	(2) 3	(2) 3–1/2
800	25	(3) 300 KCMIL	(3) 1/0	(3) 2/0	–––	(3) 2–1/2	(3) 3
1000	26	(3) 400 KCMIL	(3) 2/0	(3) 2/0	–––	(3) 3	(3) 3
1100	27	(3) 500 KCMIL	(3) 3/0	(3) 2/0	–––	(3) 3	(3) 3–1/2
1200	28	(4) 350 KCMIL	(4) 3/0	(4) 2/0	–––	(4) 2–1/2	(4) 3
1500	29	(4) 500 KCMIL	(4) 4/0	(4) 2/0	–––	(4) 3	(4) 3–1/2
1600	30	(5) 400 KCMIL	(5) 4/0	(5) 2/0	–––	(5) 3	(5) 3
1900	31	(5) 500 KCMIL	(5) 250	(5) 2/0	–––	(5) 3	(5) 3–1/2
2000	32	(6) 400 KCMIL	(6) 250	(6) 2/0	–––	(6) 3	(6) 3–1/2
2500	33	(7) 500 KCMIL	(7) 350	(7) 2/0	–––	(7) 3	(7) 3–1/2
3000	34	(8) 500 KCMIL	(8) 400	(8) 2/0	–––	(8) 3	(8) 3–1/2

THE ABOVE SCHEDULE IS BASED ON 600 VOLT WIRE TYPE 90°C THHN/THWN/XHHW. THE FOLLOWING IS A SAMPLE OF WIRE AND CONDUIT READOUT FROM ABOVE SCHEDULE (OR OTHERWISE NOTED):

(2A) = (2)#12AWG, (1)#12GRD IN 3/4" C.

GENERAL NOTES

1. ALL ELECTRICAL EQUIPMENT SHALL BE INSTALLED AND GROUNDED IN ACCORDANCE WITH THE LATEST REQUIREMENTS OF THE NATIONAL ELECTRICAL CODE, THE SPECIFICATIONS FOR GROUNDING, THE CONTRACT DRAWINGS, FEDERAL, STATE AND LOCAL CODES AND TO THE SATISFACTION OF THE ENGINEER. ALL GROUNDING CONNECTIONS TO BE MADE BY THE CADWELD PROCESS OR EQUAL.
2. ALL CONDUITS AND ELECTRICAL EQUIPMENT ARE SHOWN DIAGRAMMATICALLY AND MAY BE ALTERED TO SUIT FIELD CONDITIONS PENDING ENGINEER'S APPROVAL.
3. ALL PLANS ELEVATIONS AND CLEARANCES SHALL BE CHECKED IN THE FIELD PRIOR TO INSTALLATION TO AVOID ALL OBSTRUCTIONS.
4. ALL JUNCTION BOXES SHALL BE OF SUFFICIENT SIZE TO PROVIDE FREE SPACE FOR ALL CONDUCTORS ENCLOSED IN THE BOX AND SHALL BE SIZED WITH THE LATEST N.E.C. ARTICLE 314.
5. ALL DIMENSIONS ARE APPROXIMATE AND MUST BE VERIFIED IN THE FIELD BY THE CONTRACTOR.
6. CONTRACTOR SHALL CHECK FOR OBSTRUCTIONS AND CLEAN OUT ALL CONDUITS PRIOR TO PULLING IN CABLES.
7. PHASING OF ALL ELECTRICAL CONNECTIONS SHALL BE THE RESPONSIBILITY OF THE ELECTRICAL CONTRACTOR AND SHALL BE MADE IN ACCORDANCE WITH THE LOCAL UTILITY COMPANY REQUIREMENTS.
8. ALL HOLES THROUGH STRUCTURE TO ACCOMMODATE ELECTRICAL CONDUITS SHALL BE CORE DRILLED AND SEALED WITH NON–SHRINK GROUTING COMPOUND. WHERE RACEWAYS PASS THROUGH FLOORS AND FIRE RATED WALLS AND/OR PARTITIONS, CONTRACTOR SHALL FURNISH UL RATED FIREPROOFING MATERIAL TO BE INSTALLED IN STRICT COMPLIANCE WITH THE MANUFACTURER'S RECOMMENDATIONS AND RESTORE ORIGINAL FIRE RATING.
9. THE CONTRACTOR SHALL FURNISH STRUCTURAL SUPPORT FOR ALL EQUIPMENT. FOR SURFACE MOUNTED EQUIPMENT, SUCH AS PANELBOARDS, STARTERS, SAFETY SWITCHES AND THE LIKE, PROVIDE "UNISTRUT" WITH CORROSION RESISTANT MOUNTING HARDWARE.
10. NO CONDUIT SMALLER THAN 3/4" SHALL BE USED UNLESS OTHERWISE SPECIFIED.
11. ALL JOINTS BETWEEN DISSIMILAR METALS SHALL BE COATED WITH A LITHIUM BASED THREAD LUBRICANT.
12. RACEWAYS SHALL BE PROVIDED WITH AN APPROVED EXPANSION–DEFLECTION FITTINGS WHERE CROSSING BUILDING CONSTRUCTION EXPANSION JOINTS AND WHERE NECESSARY TO COMPENSATE FOR THERMAL EXPANSION AND CONTRACTION.
13. FURNISH AND INSTALL CONCRETE PADS FOR ALL FLOOR MOUNTED ELECTRICAL EQUIPMENT.
14. PRIOR TO SUBMITTING PROPOSALS, BIDDERS ARE INSTRUCTED TO REVIEW PLANS AND SPECIFICATIONS OF ALL CONCURRENT WORK TO DETERMINE QUANTITIES OF LABOR AND MATERIAL NECESSARY TO INSTALL, CONNECT, AND TEST MATERIAL FURNISHED UNDER THESE SPECIFICATIONS. ANY ADDITIONAL LABOR AND MATERIAL REQUIRED DUE TO FAILURE OF THE CONTRACTOR TO FOLLOW THESE INSTRUCTIONS, SHALL BE FURNISHED AT NO ADDITIONAL COST TO THE OWNER.
15. THE ELECTRICAL CONTRACTOR SHALL COORDINATE HIS WORK WITH THAT OF ALL OTHER CONTRACTORS EMPLOYED ON THIS PROJECT PRIOR TO ROUGHING IN. THE CONTRACTOR SHALL OBTAIN AND REVIEW APPROVED SHOP DRAWINGS OF ALL OTHER TRADES AFFECTING ALL ELECTRICAL WORK.
16. THE CONTRACTOR SHALL CHECK AND TORQUE TIGHTEN ALL CONNECTIONS, WHETHER FACTORY MADE OR MADE UNDER THIS CONTRACT, USING ACCURATELY CALIBRATED TOOLS. TORQUE SETTINGS SHALL BE IN ACCORDANCE WITH THE MANUFACTURER'S SPECIFIC RECOMMENDATIONS.
17. INSTALL AN 1/8" INCH POLY PROPYLENE (PULL–IN–ROPE) IN ALL SPARE CONDUITS.
18. INSULATED COPPER CONDUCTORS FOR EQUIPMENT GROUNDING SHALL BE ROUTED WITH ALL POWER CONDUCTORS.
19. CONDUCTORS USED FOR CONTROL WIRING SHALL BE AT LEAST NO. 14 AWG AND ALL POWER CONDUCTORS SHALL BE AT LEAST NO. 12 AWG UNLESS OTHERWISE SPECIFIED.
20. CONTRACTOR SHALL PROVIDE ALL NECESSARY SAFETY EQUIPMENT AND EXERCISE PRECAUTIONARY PROCEDURES WHEN WORKING WITH OR NEAR ENERGIZED EQUIPMENT.
21. CONTRACTOR SHALL REMOVE ALL OBSOLETE EQUIPMENT, CONDUITS AND WIRING, EXCEPT WHERE OTHERWISE NOTED.
22. INTERRUPTION OF SERVICE SHALL BE SCHEDULED AND COORDINATED WITH THE OWNER AND HELD TO MINIMUM IN ORDER TO MAINTAIN THE PROPER OPERATION OF THE FACILITY.
23. WHEN CONDUIT OR CABLE RUNS FOR POWER AND LIGHTING EXCEED 60 FT. FOR 120 VOLT OR 120 FT. FOR 277 VOLT TO CENTER OF LOAD, NO. 10 AWG WIRE OR LARGER SHALL BE USED AS REQUIRED FOR A MAXIMUM 3% VOLTAGE DROP AT FULL CIRCUIT CAPACITY.
24. HEAVIER LINE WEIGHT SYMBOLS AND TEXT INDICATE NEW WORK UNLESS OTHERWISE NOTED. LIGHT LINE WEIGHT SYMBOLS AND ITALICIZED TEXT INDICATE EXISTING CONDITIONS TO REMAIN UNLESS OTHERWISE NOTED.
25. CONTRACTOR SHALL SALVAGE ALL DEMOLISHED EQUIPMENT AND VERIFY WITH OWNER PRIOR TO DISPOSING OF THE DEMOLISHED EQUIPMENT.
26. CONTRACTOR SHALL COORDINATE THE REMOVAL AND INSTALLATION OF ALL DEVICES ASSOCIATED WITH SURVEILLANCE, COMMUNICATIONS, AND CONTROL OF THE FACILITY WITH THE OWNER.
27. THE CONTRACTOR SHALL PROVIDE A THOROUGH EVALUATION OF THE EXISTING PROJECT SITE AND BUILDING CONDITIONS. WHERE EXISTING CONDITIONS WARRANT CHANGES TO ACCOMMODATE THE NEW WORK PLANNED, THE CONTRACTOR SHALL PROVIDE THE REQUIRED WORK AND MATERIALS TO INCLUDE ANY AND ALL ALTERATIONS, DEMOLITION, PATCHING, AND REPAIRING OF THE EXISTING CONDITIONS TO ACCOMMODATE THE NEW CONSTRUCTION WORK AS A COMPLETE INSTALLATION.

RVE 1901
REMINGTON & VERNICK ENGINEERS
2059 SPRINGDALE ROAD
CHERRY HILL, NJ 08003
(856) 795-9595, FAX (856) 795-1882
WEB ADDRESS : RVE.COM
Certification of Authorization: 24 GA 28003300
Excellence • Innovation • Service

DATE: 01-31-2025
DENNIS K. YODER
NJ PROFESSIONAL ENGINEER LIC. No. 31866

DATE: 01-31-2025
KAVAN R. SMITH
NJ PROFESSIONAL ENGINEER LIC. No. 56794

No.	REVISION	DATE	BY	CHK
1	ELSA PRELIMINARY REVISION	6/4/24	K.M.	K.M.
2	ELSA VEHICLE STORAGE BUILDING	10/28/24	K.M.	K.M.

ELECTRICAL COVER SHEET

EWING LAWRANCE SEWAGE AUTHORITY
ELSA VEHICLE STORAGE BUILDING
TOWNSHIP OF LAWRENCE MERCER COUNTY NEW JERSEY

DRAWN BY:	DESIGN BY:	CHECKED BY:	SCALE:
R.R.	K.M.		AS NOTED
DATE: 10.2023		SHEET No.: E-1.0	
JOB No.: 1102M026			

P:\Projects\Mercer County\1102M026\Sheets\E-1.0 Electrical Cover Sheet.dwg 10/30/2025 2:52:23 PM

P:\Projects\Mercer County\1102M026\Sheets\E-1.0 Electrical Cover Sheet.dwg

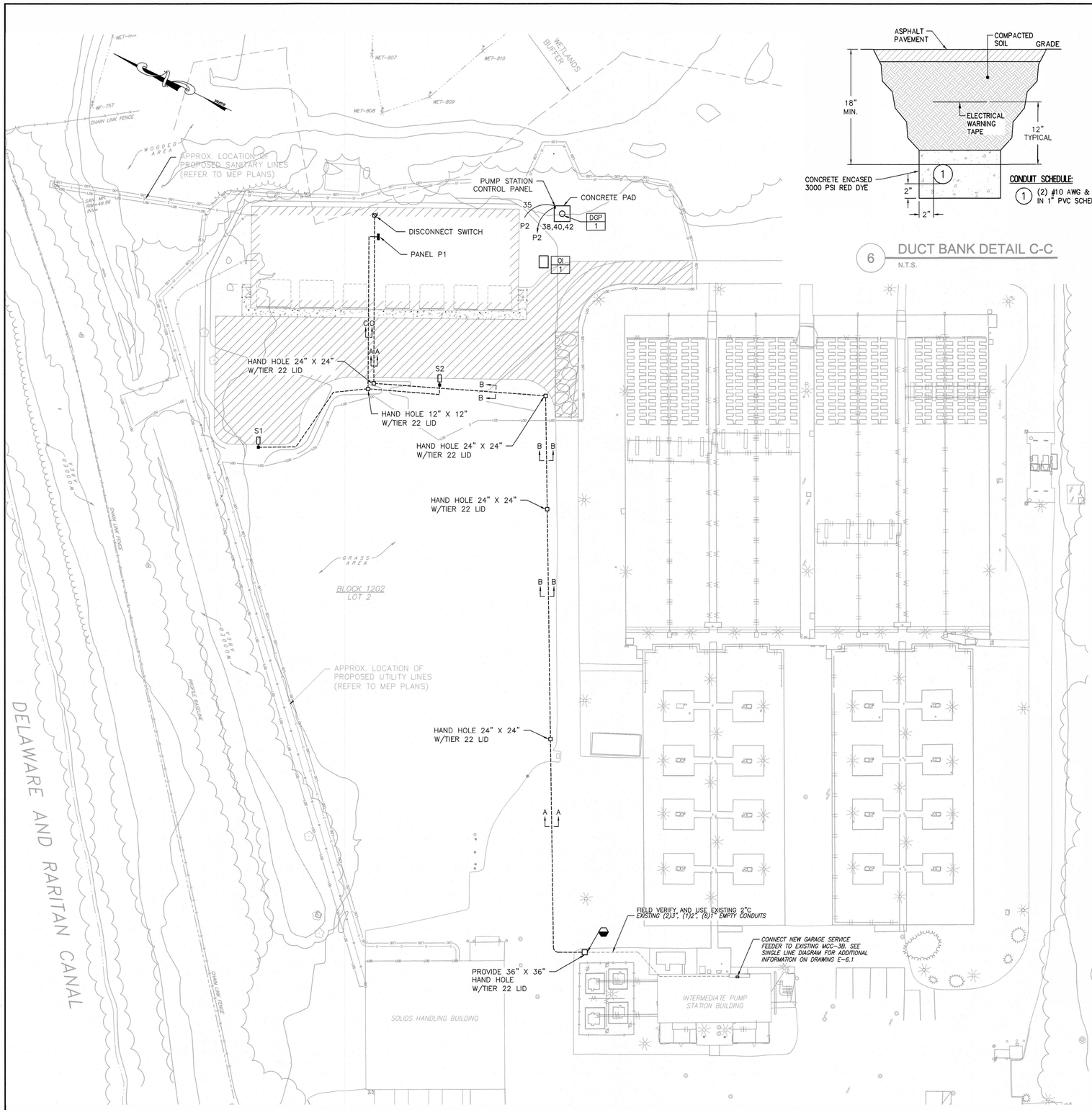

1 ELECTRICAL SITE PLAN
SCALE: 1" = 30'

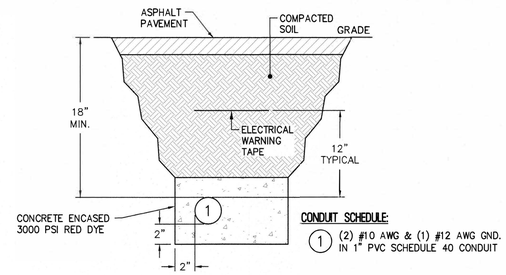

6 DUCT BANK DETAIL C-C
N.T.S.

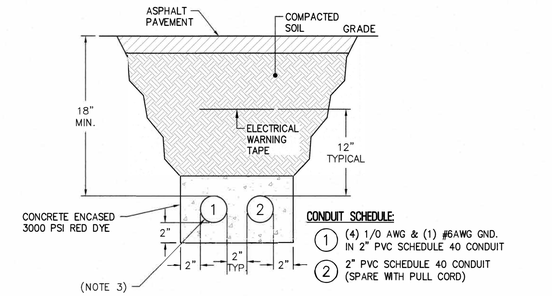

2 DUCT BANK DETAIL A-A
N.T.S.

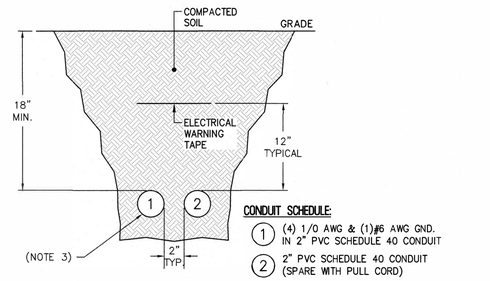

3 DUCT BANK DETAIL B-B
N.T.S.

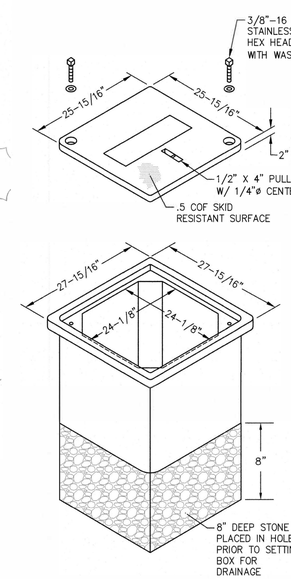

4 24"x24" HAND HOLE DETAIL
N.T.S.

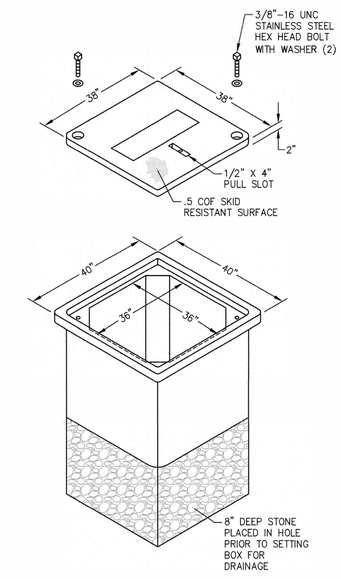

5 36"x36" HAND HOLE DETAIL
N.T.S.

NOTES:

1. ALL NOTES, SYMBOLS, AND ABBREVIATIONS ON DRAWING E-1.0 APPLY TO THIS DRAWING.
2. THIS DRAWING IS DIAGRAMMATIC, IT IS THE CONTRACTOR'S RESPONSIBILITY TO CONFIRM EXISTING SITE CONDITIONS AND INSTALLATION CLEARANCES PRIOR TO SHOP DRAWING SUBMISSIONS AND INSTALLATION. SHOULD THE CONTRACTOR DETERMINE THAT THE INSTALLATION OF ANY ELECTRICAL COMPONENT IS RESTRICTED OR NOT ABLE TO BE INSTALLED IN THE SUGGESTED LOCATION, THE CONTRACTOR SHALL READDRESS THE INSTALLATION ACCORDINGLY AND IN COMPLIANCE WITH THE MOST RECENTLY ADOPTED NATIONAL ELECTRICAL CODE APPROVED BY THE AUTHORITY HAVING JURISDICTION AT NO ADDITIONAL COST.
3. PROVIDE CONDUIT SUPPORT (CARLON SNAP-IN-STACK) OR EQUAL. FOR ALL DUCT BANKS: PROVIDE SPACING PER MANUFACTURER'S RECOMMENDATION, BUT NOT MORE THAN 5'-0" O.C.

RVE 1901
REMINGTON & VERNICK ENGINEERS
2059 SPRINGDALE ROAD
CHERRY HILL, NJ 08003
(856) 795-9595, FAX (856) 795-1882
WEB ADDRESS : RVE.COM
Certification of Authorization: 24 GA 28003300
Excellence • Innovation • Service

DATE: 01-31-2025
DENNIS K. YODER
NJ PROFESSIONAL ENGINEER LIC. No. 31866

DATE: 01-31-2025
KAVAN R. SMITH
NJ PROFESSIONAL ENGINEER LIC. No. 56794

PLANS WHICH DO NOT BEAR AN EMBOSSED SEAL ARE NOT VALID.

No.	REVISION	DATE	BY	CHK
1	ELSA PRELIMINARY REVISION	6/4/24	K.M.	K.M.
2	ELSA VEHICLE STORAGE BUILDING	10/28/24	K.M.	K.M.

ELECTRICAL SITE PLAN

EWING LAWRANCE SEWAGE AUTHORITY
ELSA VEHICLE STORAGE BUILDING
TOWNSHIP OF LAWRENCE MERCER COUNTY NEW JERSEY

DRAWN BY:	DESIGN BY:	CHECKED BY:	SCALE:
R.R.	K.M.		AS NOTED
DATE: 10.2023			SHEET No.: ES-2.1
JOB No.: 1102M026			

P:\Projects\Mercer County\1102M026\Sheets\ES-2.1 Electrical Site Plan.dwg 1/29/2025 2:52:33 PM

P:\Projects\Mercer County\1102M026\Sheets\ES-2.1 Electrical Site Plan.dwg

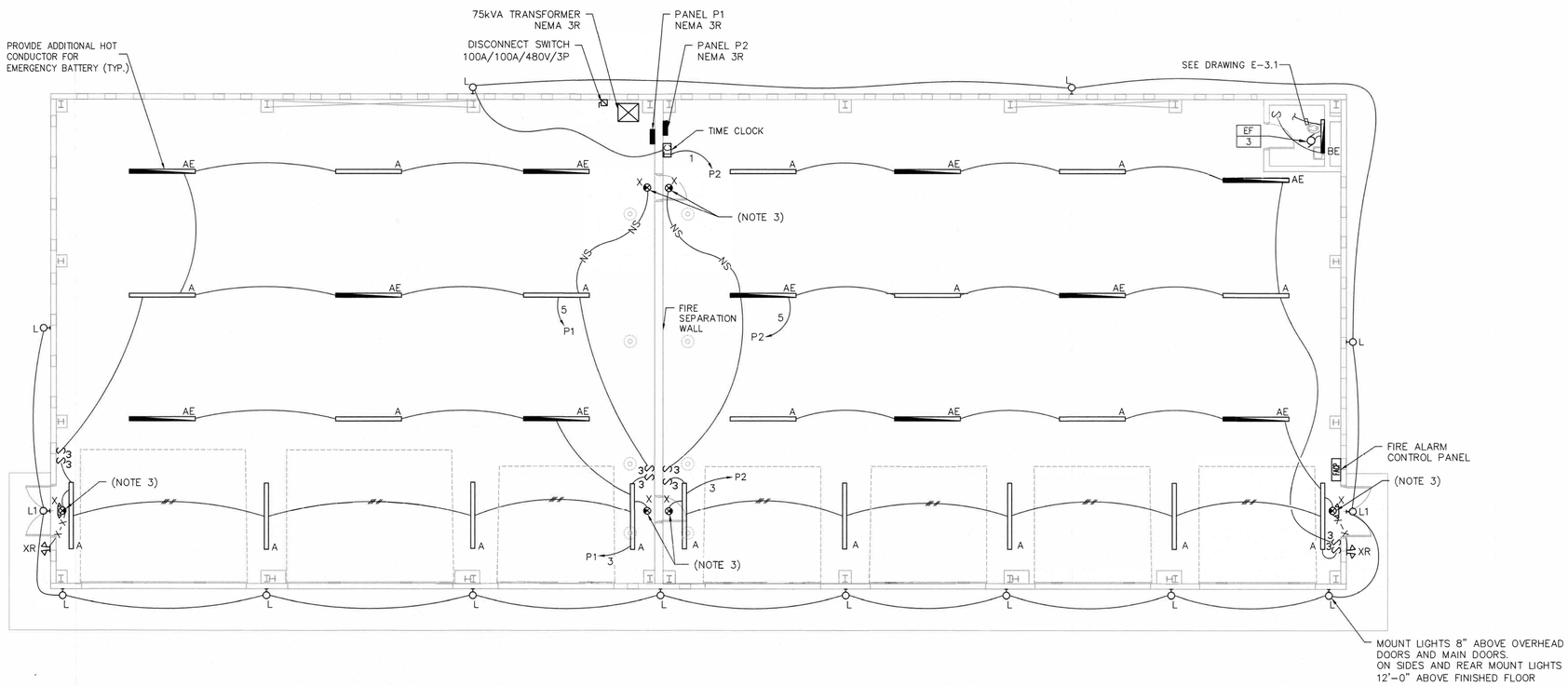

1 ELECTRICAL LIGHTING PLAN

SCALE: 1/8"=1'-0"

NOTES:

1. ALL NOTES, SYMBOLS, AND ABBREVIATIONS ON DRAWING E-1.0 APPLY TO THIS DRAWING.
2. THIS DRAWING IS DIAGRAMMATIC, IT IS THE CONTRACTOR'S RESPONSIBILITY TO CONFIRM EXISTING SITE CONDITIONS AND INSTALLATION CLEARANCES PRIOR TO SHOP DRAWING SUBMISSIONS AND INSTALLATION. SHOULD THE CONTRACTOR DETERMINE THAT THE INSTALLATION OF ANY ELECTRICAL COMPONENT IS RESTRICTED OR NOT ABLE TO BE INSTALLED IN THE SUGGESTED LOCATION, THE CONTRACTOR SHALL READDRESS THE INSTALLATION ACCORDINGLY AND IN COMPLIANCE WITH THE MOST RECENTLY ADOPTED NATIONAL ELECTRICAL CODE APPROVED BY THE AUTHORITY HAVING JURISDICTION AT NO ADDITIONAL COST.
3. CONNECT EXIT SIGNS TO LIGHTING CIRCUIT AHEAD OF SWITCHING CONTROL.

RVE 1901
REMINGTON & VERNICK **ENGINEERS**
2059 SPRINGDALE ROAD
CHERRY HILL, NJ 08003
(856) 795-9595, FAX (856) 795-1882
WEB ADDRESS : RVE.COM
Certification of Authorization: 24 GA 28003300
Excellence • Innovation • Service

DATE: 01-31-2025
DENNIS K. YODER
NJ PROFESSIONAL ENGINEER LIC. No. 31866

DATE: 01-31-2025
KAVAN R. SMITH
NJ PROFESSIONAL ENGINEER LIC. No. 56794

PLANS WHICH DO NOT BEAR AN EMBOSSED SEAL ARE NOT VALID.

No.	REVISION	DATE	BY	CHK
1	ELSA PRELIMINARY REVISION	6/4/24	K.M.	K.M.
2	ELSA VEHICLE STORAGE BUILDING	10/29/24	K.M.	K.M.

ELECTRICAL LIGHTING PLAN

EWING LAWRANCE SEWAGE AUTHORITY

ELSA VEHICLE STORAGE BUILDING

TOWNSHIP OF LAWRENCE MERCER COUNTY NEW JERSEY

DRAWN BY:	DESIGN BY:	CHECKED BY:	SCALE:
R.R.	K.M.		AS NOTED
DATE: 10.2023			SHEET No.: E-2.1
JOB No.: 1102M026			

P:\Projects\Mercer County\1102M026\Sheets\E-2.1 Electrical Lighting Plan.dwg 10/29/2025 2:52:42 PM

P:\Projects\Mercer County\1102M026\Sheets\E-2.1 Electrical Lighting Plan.dwg

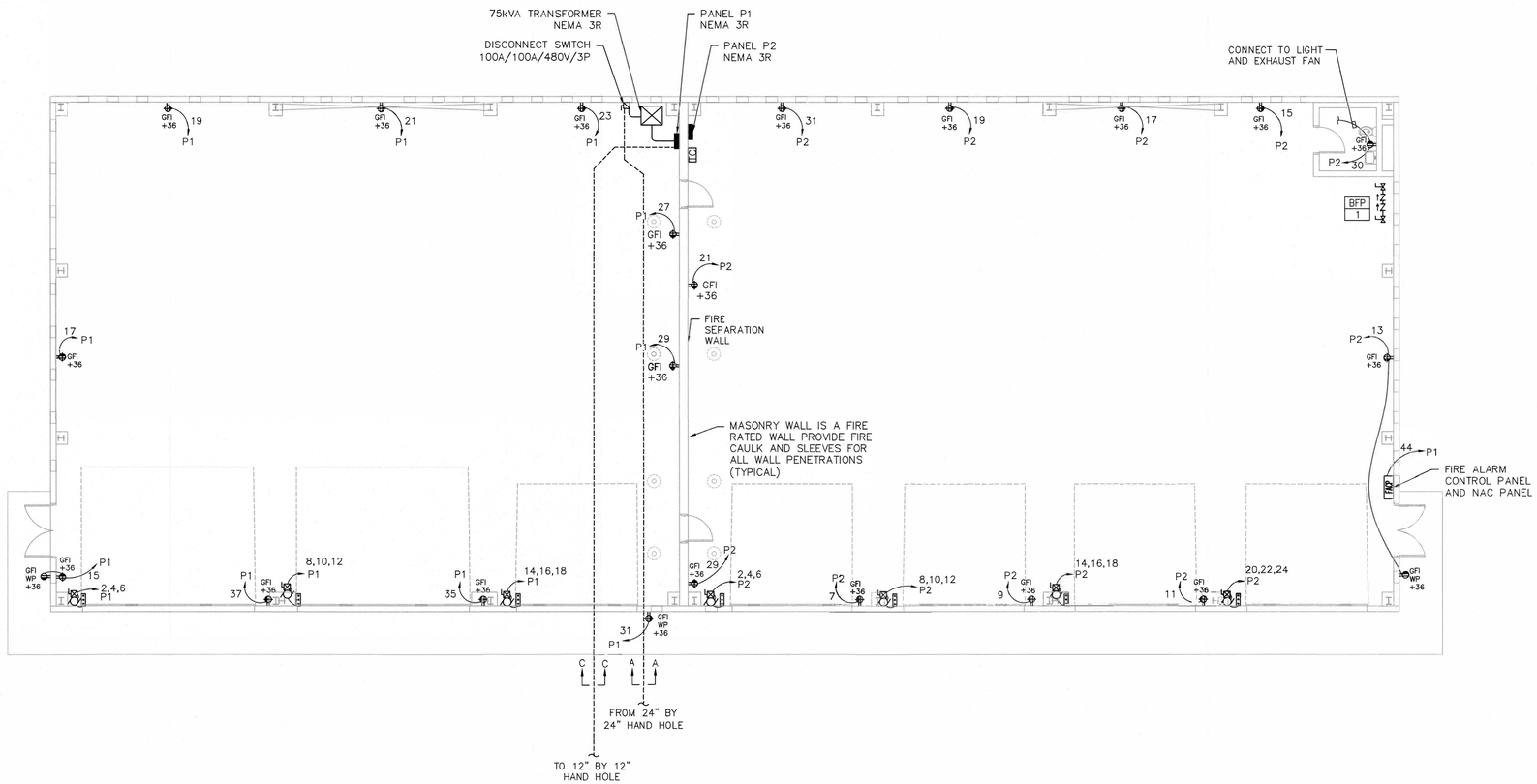

1 ELECTRICAL POWER PLAN

SCALE: 1/8"=1'-0"

NOTES:

1. ALL NOTES, SYMBOLS, AND ABBREVIATIONS ON DRAWING E-1.0 APPLY TO THIS DRAWING.
2. THIS DRAWING IS DIAGRAMMATIC, IT IS THE CONTRACTOR'S RESPONSIBILITY TO CONFIRM EXISTING SITE CONDITIONS AND INSTALLATION CLEARANCES PRIOR TO SHOP DRAWING SUBMISSIONS AND INSTALLATION. SHOULD THE CONTRACTOR DETERMINE THAT THE INSTALLATION OF ANY ELECTRICAL COMPONENT IS RESTRICTED OR NOT ABLE TO BE INSTALLED IN THE SUGGESTED LOCATION, THE CONTRACTOR SHALL READDRESS THE INSTALLATION ACCORDINGLY AND IN COMPLIANCE WITH THE MOST RECENTLY ADOPTED NATIONAL ELECTRICAL CODE APPROVED BY THE AUTHORITY HAVING JURISDICTION AT NO ADDITIONAL COST.

RVE 1901

REMINGTON & VERNICK **ENGINEERS**

2059 SPRINGDALE ROAD
CHERRY HILL, NJ 08003
(856) 795-9595, FAX (856) 795-1882
WEB ADDRESS : RVE.COM
Certification of Authorization: 24 GA 28003300
Excellence • Innovation • Service

DATE: 01-31-2025
DENNIS K. YODER
NJ PROFESSIONAL ENGINEER LIC. No. 31866

DATE: 01-31-2025
KAVAN R. SMITH
NJ PROFESSIONAL ENGINEER LIC. No. 56794

PLANS WHICH DO NOT BEAR AN EMBOSSED SEAL ARE NOT VALID.

No.	REVISION	DATE	BY	CHK
1	ELSA PRELIMINARY REVISION	6/4/24	K.M.	K.M.
2	ELSA VEHICLE STORAGE BUILDING	10/28/24	K.M.	K.M.

ELECTRICAL POWER PLAN

EWING LAWRANCE SEWAGE AUTHORITY

ELSA VEHICLE STORAGE BUILDING

TOWNSHIP OF LAWRENCE MERCER COUNTY NEW JERSEY

DRAWN BY :	DESIGN BY :	CHECKED BY :	SCALE :
R.R.	K.M.		AS NOTED
DATE : 10.2023		SHEET No. : E-3.1	
JOB No. : 1102M026			

P:\Projects\Mercer County\1102M026\Sheets\E-3.1 Electrical Power Plan.dwg 10/28/2025 2:32:32 PM

P:\Projects\Mercer County\1102M026\Sheets\E-3.1 Electrical Power Plan.dwg

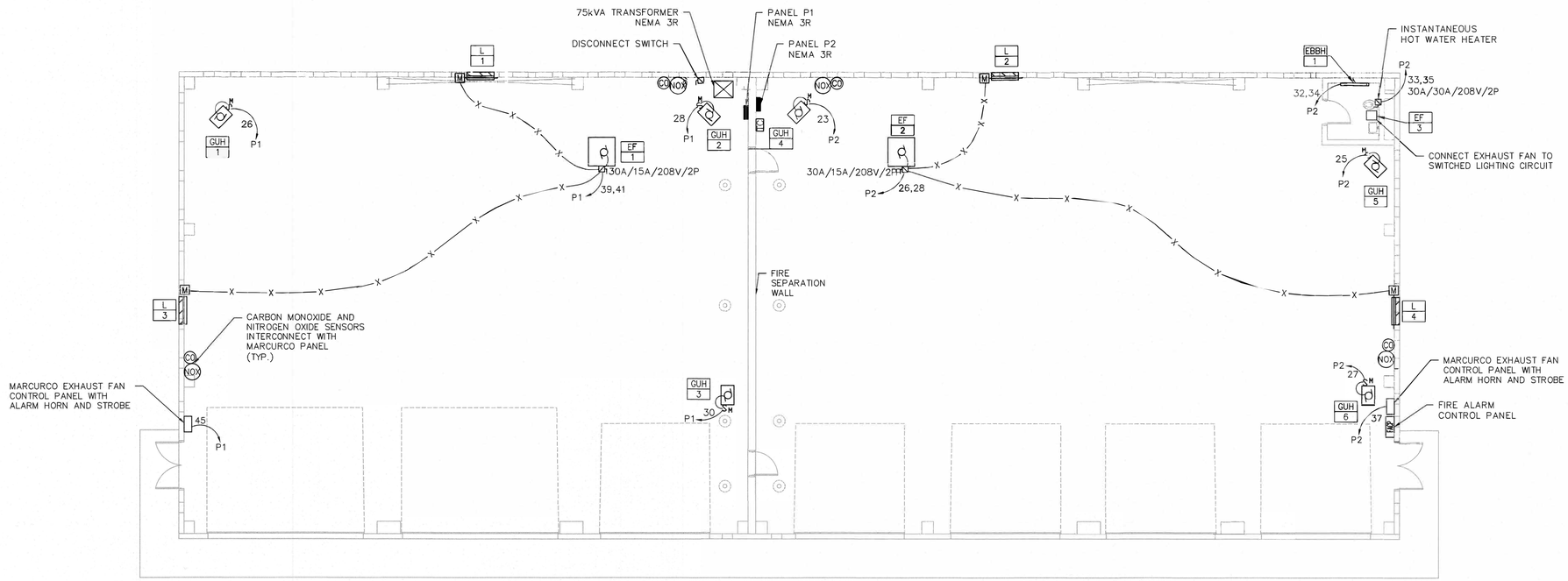

1 ELECTRICAL HVAC POWER PLAN

SCALE: 1/8"=1'-0"

NOTES:

1. ALL NOTES, SYMBOLS, AND ABBREVIATIONS ON DRAWING E-1.0 APPLY TO THIS DRAWING.
2. THIS DRAWING IS DIAGRAMMATIC, IT IS THE CONTRACTOR'S RESPONSIBILITY TO CONFIRM EXISTING SITE CONDITIONS AND INSTALLATION CLEARANCES PRIOR TO SHOP DRAWING SUBMISSIONS AND INSTALLATION. SHOULD THE CONTRACTOR DETERMINE THAT THE INSTALLATION OF ANY ELECTRICAL COMPONENT IS RESTRICTED OR NOT ABLE TO BE INSTALLED IN THE SUGGESTED LOCATION, THE CONTRACTOR SHALL READDRESS THE INSTALLATION ACCORDINGLY AND IN COMPLIANCE WITH THE MOST RECENTLY ADOPTED NATIONAL ELECTRICAL CODE APPROVED BY THE AUTHORITY HAVING JURISDICTION AT NO ADDITIONAL COST.

RVE 1901

REMINGTON & VERNICK **ENGINEERS**

2059 SPRINGDALE ROAD
CHERRY HILL, NJ 08003
(856) 795-9595, FAX (856) 795-1882
WEB ADDRESS : RVE.COM
Certification of Authorization: 24 GA 28003300
Excellence • Innovation • Service

DATE: 01-31-2025
DENNIS K. YODER
NJ PROFESSIONAL ENGINEER LIC. No. 31866

DATE: 01-31-2025
KAVAN R. SMITH
NJ PROFESSIONAL ENGINEER LIC. No. 56794

PLANS WHICH DO NOT BEAR AN EMBOSSED SEAL ARE NOT VALID

No.	REVISION	DATE	BY	CHK
1	ELSA PRELIMINARY REVISION	04/24	K.M.	K.M.
2	ELSA VEHICLE STORAGE BUILDING	10/24	K.M.	K.M.

ELECTRICAL HVAC POWER PLAN

EWING LAWRANCE SEWAGE AUTHORITY

ELSA VEHICLE STORAGE BUILDING

TOWNSHIP OF LAWRENCE — MERCER COUNTY — NEW JERSEY

DRAWN BY :	DESIGN BY :	CHECKED BY :	SCALE :
R.R.	K.M.		AS NOTED
DATE : 10.2023		SHEET No. : E-3.2	
JOB No. : 1102M026			

P:\Projects\Mercer County\1102M026\Sheets\E-3.2 Electrical HVAC Plan.dwg 1/30/2025 2:52:09 PM

P:\Projects\Mercer County\1102M026\Sheets\E-3.2 Electrical HVAC Plan.dwg

LEGEND	
●	AIR TERMINAL
— · — · —	CABLE, CLASS I
▲	BOND
DL	DOWN LEAD CONDUCTOR, ROOF TO GROUND
—|||	GROUND ELECTRODE

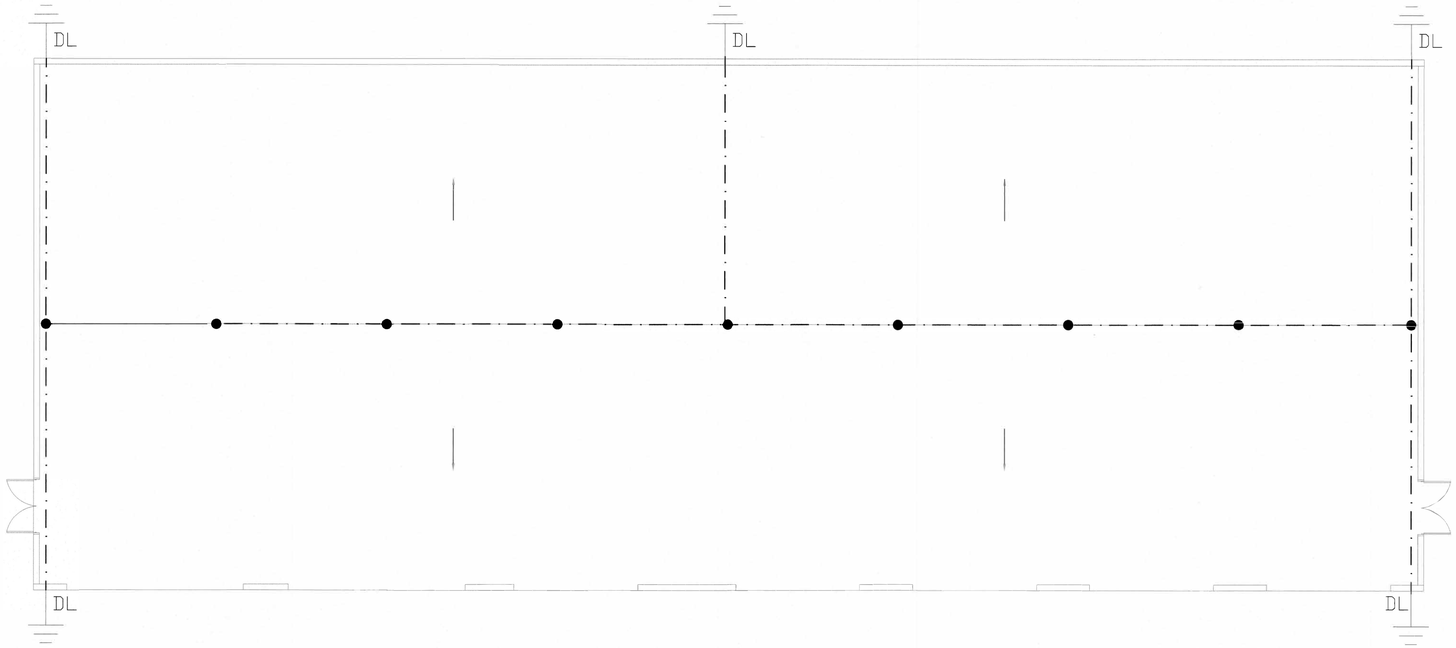

1 ELECTRICAL LIGHTNING PLAN
SCALE: 1/8"=1'-0"

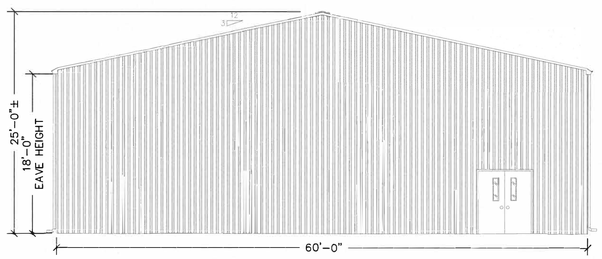

2 ELECTRICAL ELEVATION PLAN
SCALE: 1/8"=1'-0"

NOTES:

1. ALL NOTES, SYMBOLS, AND ABBREVIATIONS ON DRAWING E-1.0 APPLY TO THIS DRAWING.
2. THIS DRAWING IS DIAGRAMMATIC, IT IS THE CONTRACTOR'S RESPONSIBILITY TO CONFIRM EXISTING SITE CONDITIONS AND INSTALLATION CLEARANCES PRIOR TO SHOP DRAWING SUBMISSIONS AND INSTALLATION. SHOULD THE CONTRACTOR DETERMINE THAT THE INSTALLATION OF ANY ELECTRICAL COMPONENT IS RESTRICTED OR NOT ABLE TO BE INSTALLED IN THE SUGGESTED LOCATION, THE CONTRACTOR SHALL READDRESS THE INSTALLATION ACCORDINGLY AND IN COMPLIANCE WITH THE MOST RECENTLY ADOPTED NATIONAL ELECTRICAL CODE APPROVED BY THE AUTHORITY HAVING JURISDICTION AT NO ADDITIONAL COST.
3. ALL MATERIALS AND INSTALLATION WILL CONFORM TO THE MOST RECENT CODE REQUIREMENTS OF THE NATIONAL FIRE PROTECTION ASSOCIATION 780, LIGHTNING PROTECTION INSTITUTE 175 AND UNDERWRITERS LABORATORIES 96 AND 96A, WHOSE INSPECTION WILL BE PERFORMED AT THE COMPLETION OF THE INSTALLATION AND WHOSE CERTIFICATE WILL BE ISSUED UPON FULL PAYMENT OF THE CONTRACT.
   3.1. FINAL DESIGN/LAYOUT TO BE FIELD COORDINATED AT THE TIME OF INSTALLATION IN ORDER TO ENSURE THE LIGHTNING PROTECTION SYSTEM (LPS) IS IN COMPLIANCE WITH THE LPS STANDARDS LISTED ABOVE.
4. COPPER MATERIALS WILL BE USED FOR CONTACT WITH COPPER SURFACES, THE EARTH, ALKALINE-BASE PAINT, CONCRETE OR MASONRY, OR EXCESSIVE MOISTURE SUCH AS FLAT ROOFS; LEAD OR TIN COATED COPPER WILL BE USED WITHIN 2 FEET OF THE TOP OF A CHIMNEY; AND ALUMINUM MATERIALS WILL BE USED ON ALUMINUM, GALVANIZED STEEL, OR PAINTED METAL SURFACES; IN ACCORDANCE WITH NFPA 780 4.2, UL 96A 7, AND LPI 175 35-40.
5. SOME METAL PARTS OF THE STRUCTURE THAT HAVE A METAL THICKNESS OF $\frac{3}{16}$" OR GREATER MAY BE USED AS STRIKE TERMINATION DEVICES AND CONDUCTORS IN ACCORDANCE WITH NFPA 780 4.6.1.4, UL 96A 8.8.2, AND LPI 175 65.
6. CHEMLINK M-1, DURACIL, OR DURALINK ADHESIVE WILL BE USED FOR SECURING TO METAL SURFACES. AN APPROVED ADHESIVE WILL BE USED ON MEMBRANE ROOF AREAS TO SECURE THE CABLES AND BASES IN POSITION. NO MECHANICAL FASTENERS WILL BE DRIVEN INTO MEMBRANE ROOFING.
7. CABLE FASTENERS WILL BE SPACED NO MORE THAN 3' O.C.
8. DUE TO SAFETY CONCERNS, EXOTHERMIC WELDING ABOVE GRADE IS NOT PERMITTED. IN LIEU OF EXOTHERMIC WELD, U.L. LISTED BOLT PRESSURE FITTINGS WILL BE USED IN ACCORDANCE WITH NFPA 780 4.12.3, UL 96A 12.13--14, AND LPI 175 43.
9. DOWN CONDUCTORS WILL BE ROUTED ON EXTERIOR OF EXISTING BUILDING (NOT CONCEALED INSIDE EXTERIOR WALLS).
10. EACH DOWN CONDUCTOR LOCATED IN A RUNWAY, DRIVEWAY, SCHOOL PLAYGROUND, CATTLE YARD, PUBLIC WALK OR SIMILAR LOCATION WILL BE PROTECTED FROM MECHANICAL DAMAGE OR DISPLACEMENT IN ACCORDANCE WITH NFPA 780 4.9.11, UL 96A 9.3.3, AND LPI 175 116.
11. UNDERGROUND METALLIC PIPING SYSTEMS WILL BE BONDED AS REQUIRED BY NFPA 780 4.14.4, UL 96A 10.4.1, AND LPI 148.
12. METAL BODIES WITHIN 6 FEET OF LPS CONDUCTORS WILL BE BONDED AS REQUIRED BY NFPA 780 4.16, UL 96A 11, AND LPI 175 151.
13. INSTALLATION SHALL BE PERFORMED UNDER THE ONSITE SUPERVISION OF A LPI CERTIFIED MASTER INSTALLER.
14. INSTALLATION SHALL BE PERFORMED BY THE WARREN LIGHTNING ROD COMPANY 856-854-7000 OR APPROVED EQUAL.

RVE 1901
REMINGTON & VERNICK **ENGINEERS**
2059 SPRINGDALE ROAD
CHERRY HILL, NJ 08003
(856) 795-9595, FAX (856) 795-1882
WEB ADDRESS : RVE.COM
Certification of Authorization: 24 GA 28003300
Excellence • Innovation • Service

DATE: 01-31-2025
DENNIS K. YODER
NJ PROFESSIONAL ENGINEER LIC. No. 31866

DATE: 01-31-2025
KAVAN R. SMITH
NJ PROFESSIONAL ENGINEER LIC. No. 56794

No.	REVISION	DATE	BY	CHK
1	ELSA PRELIMINARY REVISION	6/4/24	K.M.	K.M.
2	ELSA VEHICLE STORAGE BUILDING	10/28/24	K.M.	K.M.

ELECTRICAL LIGHTNING AND ELEVATION PLAN

EWING LAWRANCE SEWAGE AUTHORITY

ELSA VEHICLE STORAGE BUILDING

TOWNSHIP OF LAWRENCE MERCER COUNTY NEW JERSEY

DRAWN BY:	DESIGN BY:	CHECKED BY:	SCALE:
R.R.	K.M.		AS NOTED
DATE: 10.2023		SHEET No.: E-3.3	
JOB No.: 1102MO26			

P:\Projects\Mercer County\1102MO26\Sheets\E-3.3 Electrical Lightning And Elevation Plan.dwg 1/28/2025 2:53:54 PM

P:\Projects\Mercer County\1102MO26\Sheets\E-3.3 Electrical Lightning And Elevation Plan.dwg

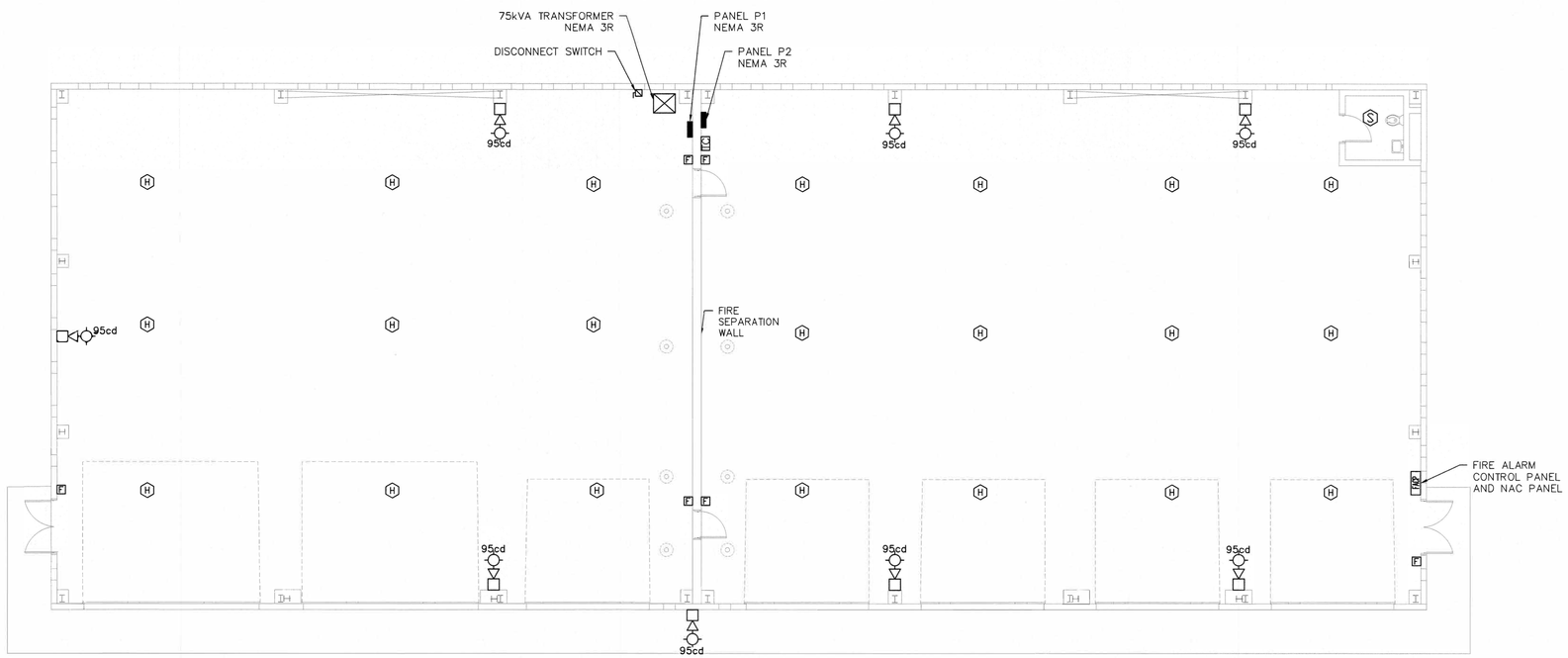

1 ELECTRICAL SYSTEMS PLAN

SCALE: 1/8"=1'-0"

NOTES:

1. ALL NOTES, SYMBOLS, AND ABBREVIATIONS ON DRAWING E-1.0 APPLY TO THIS DRAWING.
2. THIS DRAWING IS DIAGRAMMATIC, IT IS THE CONTRACTOR'S RESPONSIBILITY TO CONFIRM EXISTING SITE CONDITIONS AND INSTALLATION CLEARANCES PRIOR TO SHOP DRAWING SUBMISSIONS AND INSTALLATION. SHOULD THE CONTRACTOR DETERMINE THAT THE INSTALLATION OF ANY ELECTRICAL COMPONENT IS RESTRICTED OR NOT ABLE TO BE INSTALLED IN THE SUGGESTED LOCATION, THE CONTRACTOR SHALL READDRESS THE INSTALLATION ACCORDINGLY AND IN COMPLIANCE WITH THE MOST RECENTLY ADOPTED NATIONAL ELECTRICAL CODE APPROVED BY THE AUTHORITY HAVING JURISDICTION AT NO ADDITIONAL COST.

RVE 1901
REMINGTON & VERNICK ENGINEERS
2059 SPRINGDALE ROAD
CHERRY HILL, NJ 08003
(856) 795-9595, FAX (856) 795-1882
WEB ADDRESS : RVE.COM
Certification of Authorization: 24 GA 28003300
Excellence • Innovation • Service

DATE: 01-31-2025
DENNIS K. YODER
NJ PROFESSIONAL ENGINEER LIC. No. 31866

DATE: 01-31-2025
KAVAN R. SMITH
NJ PROFESSIONAL ENGINEER LIC. No. 56794

PLANS WHICH DO NOT BEAR AN EMBOSSED SEAL ARE NOT VALID.

No.	REVISION	DATE	BY	CHK
1	ELSA PRELIMINARY REVISION	6/4/24	K.M.	K.M.
2	ELSA VEHICLE STORAGE BUILDING	10/28/24	K.M.	K.M.

ELECTRICAL SYSTEMS PLAN

EWING LAWRANCE SEWAGE AUTHORITY

ELSA VEHICLE STORAGE BUILDING

TOWNSHIP OF LAWRENCE MERCER COUNTY NEW JERSEY

DRAWN BY :	DESIGN BY :	CHECKED BY :	SCALE :
R.R.	K.M.		AS NOTED
DATE : 10.2023			SHEET No. : E-4.1
JOB No. : 1102M026			

P:\Projects\Mercer County\1102M026\Sheets\E-4.1 Electrical Systems Plan.dwg 1/29/2025 2:53:08 PM

P:\Projects\Mercer County\1102M026\Sheets\E-4.1 Electrical Systems Plan.dwg

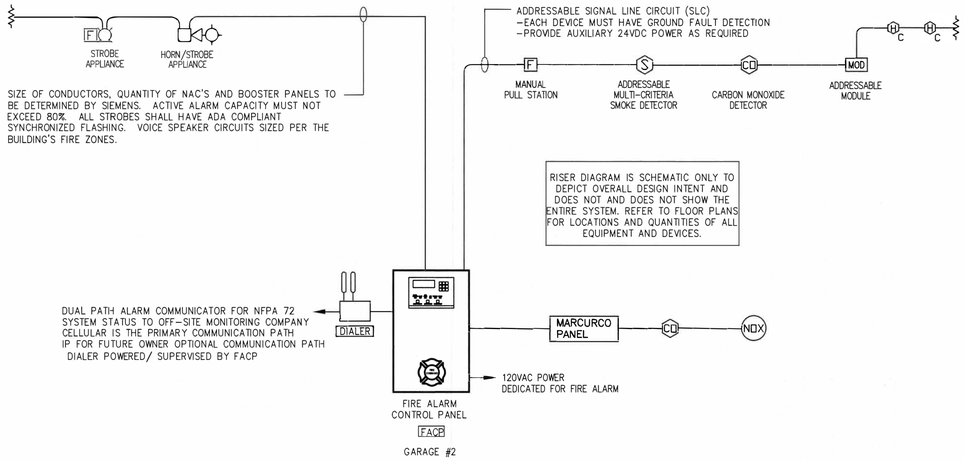

1 FIRE ALARM SINGLE LINE DIAGRAM

N.T.S.

NFPA 72 SIGNAL TYPE

ALARM: A SIGNAL WHICH INDICATES AN EMERGENCY SITUATION REQUIRING IMMEDIATE ACTION

TROUBLE: A SIGNAL WHICH INDICATES A FAULT WITH AN APPLIANCE, DEVICE, OR SYSTEM COMPONENT

SUPERVISORY: A SIGNAL WHICH INDICATES A NON-EMERGENCY SITUATION REQUIRING IMMEDIATE ACTION

	ALARM SIGNAL	TROUBLE SIGNAL	SUPERVISORY SIGNAL	ANNUNCIATE @ FACP	ANNUNCIATE @ BA	SUPPRESSION SIGNAL SENT TO SUPPRESSION SYSTEM	NOTIFICATION APPLIANCES	LOCAL CO DETECTOR AND LED	REMOTE LED
MANUAL PULL STATION	●			●	●				
AREA DETECTOR (SMOKE, OR HEAT)	●			●	●				
FACP, NAC BOOSTER OR DACT FAULT		●		●	●				
SLC/NAC EQUIPMENT OR CIRCUIT FAULT		●		●	●				
SLC/NAC OPEN-CIRCUIT		●		●	●				
CARBON MONOXIDE DETECTOR			●	●	●			●	

FIRE ALARM SYSTEM OPERATION NOTES:

1. THIS NFPA 72 OPERATIONAL MATRIX IS BASED ON A SIEMENS FIRE ALARM SYSTEM. THE CONTRACTOR SHALL SUBMIT A COMPREHENSIVE SEQUENCE OF OPERATIONS INCLUDE WITH THE INSTALLATION SHOP DRAWINGS.
2. IN NORMAL STANDBY OPERATION, A GREEN POWER ON LED SHOULD BE ILLUMINATED ON THE FACP. THE LCD DISPLAY WILL SHOW THE SYSTEM NAME, "SYSTEM NORMAL" ANNOUNCEMENT AND THE CURRENT DATE, DAY, AND TIME.
3. CARBON MONOXIDE DETECTORS SHALL INITIATE A GENERAL ALARM IF REQUIRED BY THE AHJ.
4. ALL ADDRESSABLE DETECTORS, MANUAL PULLS, AND MONITORING MODULES SHALL PROVIDE VISIBLE INDICATION FOR STATUS:
   - 4.1. NORMAL: GREEN, LED FLASHES
   - 4.2. ALARM: RED, LED FLASHES
   - 4.3. TROUBLE: AMBER, LED FLASHES

3 FIRE ALARM SEQUENCE OF OPERATIONS MATRIX

N.T.S.

NFPA 72 – 2016 DOCUMENTATION REQUIREMENTS

THE DOCUMENTATION CABINET SHALL BE SIZED SO THAT IT CAN CONTAIN THE FOLLOWING DOCUMENTATION:

- SITE-SPECIFIC SOFTWARE
- OWNER'S MANUAL
- AS-BUILT PLANS AND SYSTEM CALCULATIONS

THE BUILDING OWNER OR THE BUILDING OWNER'S REPRESENTATIVE SHALL, ON AN ANNUAL BASIS, REVIEW ANY ELECTRONIC DOCUMENTATION MEDIA FORMATS AND ASSOCIATED INTERFACING HARDWARE FOR COMPATIBILITY AND UPDATE IF NECESSARY.

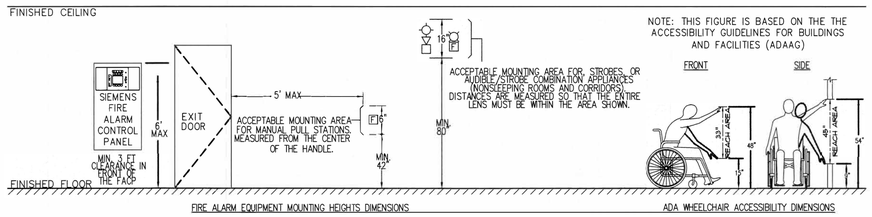

NOTE: THIS FIGURE IS BASED ON THE THE ACCESSIBILITY GUIDELINES FOR BUILDINGS AND FACILITIES (ADAAG)

MANUAL PULL STATION MOUNTING HEIGHT REFERENCES

CODE	MINIMUM	MAXIMUM
NFPA-72	39"	54"
IBC	42"	48"
ADAAG	–	*48"

*THE MOST RESTRICTIVE FRONT REACH DISTANCE

2 HARMONIZED FIRE ALARM EQUIPMENT MOUNTING DISTANCE REQUIREMENTS

N.T.S.

TYPICAL FIRE ALARM EQUIPMENT MOUNTING NOTES:

THESE MOUNTING DIMENSIONS COMPLY WITH THE FOLLOWING:

- NFPA 72 CHAPTER 5 & 7
- CABO/ANSI A117.1
- IBC CHAPTER 9
- ADA PARAGRAPH 4.2.5 & 4.2.6
- THE ADA ACCESSIBILITY GUIDELINES FOR BUILDINGS & FACILITIES (ADAAG)

FOR LOW CEILINGS WHERE THE PRESCRIBED MOUNTING HEIGHTS FOR THE SIGNALING APPLIANCES CAN NOT BE MET, INSTALL THE APPLIANCE 6" FROM THE CEILING.

ALL DEVICE & APPLIANCE HEIGHTS SHOULD BE CONSISTENT FOR THE ENTIRE PROJECT.

FOR COMBINATION AUDIO/ VISUAL APPLIANCES, THE STROBE PLACEMENT TAKES PRECEDENCE.

SPECIAL ADA/HEARING IMPAIRED SLEEPING AREAS NOTIFICATION NOTES:

A VISUAL APPLIANCE USED TO AWAKEN A SLEEPING, HEARING IMPAIRED PERSON SHALL BE PERMANENTLY INSTALLED AND LOCATED 16 FEET MAXIMUM FROM THE PILLOW OR "HEAD OF THE BED" LOCATION, MEASURED HORIZONTALLY. WALL MOUNTED APPLIANCES LOCATED AT LEAST 24 INCHES BELOW THE CEILING SHALL HAVE A MINIMUM EFFECTIVE INTENSITY OF 110 CANDELA. CEILING MOUNTED APPLIANCES AND WALL MOUNTED APPLIANCES LOCATED LESS THAN 24 INCHES BELOW THE CEILING ARE TO HAVE A MINIMUM EFFECTIVE INTENSITY OF 177 CANDELA.

IF A SUITE CONTAINS MORE THAN ONE BEDROOM, A STROBE APPLIANCE SHALL BE PROVIDED IN EACH SLEEPING AREA. LOCATE ADDITIONAL STROBE LIGHTS IN ANY LIVED-IN ROOM WHERE HEARING IMPAIRED INDIVIDUALS WOULD NEED TO BE NOTIFIED OF AN ALARM. THE CANDELA IN THESE AREAS ARE SIZED PER STANDARD NFPA 72 ROOM SPACING REQUIREMENTS.

FIRE ALARM SYSTEM RISER NOTES

1. THIS RISER DIAGRAM IS BASED ON SIEMENS BUILDING TECHNOLOGIES DESIGO FIRE ALARM CONTROL PANEL WITH HORN & STROBE EVACUATION APPLIANCES. IT IS A REPRESENTATION OF THE INTENDED SYSTEM DESIGN FOR THIS PROJECT. SEE THE FLOOR PLANS FOR EXACT QUANTITIES AND LOCATIONS OF FIELD EQUIPMENT. SEE THE PROJECT SPECIFICATIONS FOR PERFORMANCE, CAPACITY AND CODE COMPLIANCE REQUIREMENTS. THIS DRAWING DEPICTS SCHEMATIC INTERCONNECTIONS OF WIRING. EXACT ROUTING OF CONDUITS AND WIRING SHALL BE DETERMINED IN THE FIELD BY THE INSTALLING CONTRACTOR TO SUIT FIELD CONDITIONS AND AS SUBMITTED IN THE SHOP DRAWINGS. ALL CHANGES SHALL BE CLEARLY INDICATED ON THE RECORD DRAWINGS. QUANTITY AND SIZE OF CONDUCTORS TO BE DETERMINED BY SIEMENS.
2. THE MAIN FIRE ALARM CONTROL PANEL WILL PROVIDE THE PRIMARY OPERATOR'S INTERFACE WITH LCD DISPLAY, FOR COMPLETE SYSTEM ANNUNCIATION/ CONTROL IN ACCORDANCE WITH THE PROJECT SPECIFICATIONS.
3. PROVIDE AUXILIARY FIRE ALARM SIGNAL PANEL(S) W/ BATTERY BACKUP AS REQUIRED TO SUPPORT NOTIFICATION APPLIANCE LOADS, PER MANUFACTURER'S RECOMMENDATIONS. INSTALL A SMOKE DETECTOR WITHIN 5FT OF A NAC BOOSTER IF AREA COVERAGE NOT PROVIDED.
4. CONTROL UNITS, POWER SUPPLIES AND BATTERY CABINETS SHALL BE INSTALLED SO THAT WORKING CLEARANCES ARE MAINTAINED AROUND UNITS IN ACCORDANCE WITH NFPA 70 NATIONAL ELECTRIC CODE (NEC) AND MANUFACTURER'S ALLOWANCES. PANEL MOUNTING SHALL BE SUCH THAT ALL SWITCHES AND OPERATOR CONTROLS ARE NO LESS THAN 36 INCHES AND NO MORE THAN 72 INCHES ABOVE THE FINISHED FLOOR.
5. WIRING SHALL BE INSTALLED SO THAT EQUIPMENT CAN BE SERVICED OR REMOVED WITHOUT DISCONNECTING OR MOVING UNRELATED CIRCUITS. ALL WIRING WITHIN CONTROL UNITS, JUNCTION BOXES, AND TERMINAL CABINETS SHALL BE NEATLY TRIMMED, DRESSED, LABELED, AND INSTALLED IN GUTTERS OR CHANNELS. SEE SPECIFICATIONS FOR MAXIMUM ALLOWABLE CIRCUIT LOADING AND WIRE SIZE REQUIREMENTS. COORDINATE FINAL CIRCUIT QUANTITIES. AND CABLE TYPES WITH THE SYSTEM SUPPLIER'S SHOP DRAWINGS.
6. CONNECT PRIMARY 120VAC POWER TO 20A/1P CIRCUIT BREAKER DEDICATED FOR FIRE ALARM. SECONDARY POWER BATTERY BACKUP (STANDBY & ALARM) SHALL BE SIZED PER NFPA 72 REQUIREMENTS.
7. PANEL NETWORK WIRING, INCLUDING DATA COMMUNICATIONS AND AUDIO COMMUNICATIONS, SHALL BE WIRED CLASS X (FORMER CLASS A, STYLE 7) WITH SEPARATE OUTGOING AND RETURN LOOPS.
8. ADDRESSABLE DEVICE SLC'S SHALL BE NFPA 72 CLASS B. PROVIDE PROVIDE GROUND FAULT ISOLATION DETECTION BETWEEN EACH ADDRESSABLE DEVICE FOR ENHANCED SURVIVABILITY AND REDUCED TROUBLE SHOOTING TIME.
9. NOTIFICATION APPLIANCE NAC'S SHALL BE NFPA 72 CLASS B. INDIVIDUALLY ISOLATED SO THAT A SINGLE WIRING FAULT WILL NOT EFFECT THE OPERATION OF CIRCUIT(S) SERVING ANY OTHER FLOOR OR EVACUATION SIGNALING ZONE.
10. STROBE CANDELAS SETTINGS MUST BE SIZED PER NFPA 72 REQUIREMENTS BY THE FIRE ALARM VENDOR AND SHOWN ON THE SHOP DRAWINGS.
11. A COMPLETE SET FOR FIRE ALARM PRODUCT CUTSHEETS, FIRE ALARM INSTALLATION SHOP DRAWINGS, AND BATTERY/ VOLTAGE/ LOAD CALCULATIONS MUST BE SUBMITTED AND APPROVED PRIOR TO INSTALLATION.
12. THE ON-SITE COMMUNICATOR SHALL PROVIDE GENERAL (ALARM/ TROUBLE/ SUPERVISORY) AND ABILITY FOR CONTACT/ GROUPED EVENT ID REPORTING FROM THE FIRE ALARM CONTROL PANEL (FACP) TO A CENTRAL OR REMOVE RECEIVING STATION. IT SHALL OFFER THREE SELECTABLE REPORTING PATHS WHICH INCLUDE: CELLULAR ONLY, IP ONLY, OR IP PRIMARY/CELLULAR BACKUP. FOR THIS PROJECT, UTILIZE CELLULAR COMMUNICATIONS AS THE PRIMARY MEANS OF COMMUNICATION, PER NFPA 72 REQUIREMENTS. IP COMMUNICATIONS FOR OWNER SELECTED/PROVIDED FUTURE OPTION. THE COMMUNICATOR SHALL RECEIVE ITS POWER AND SUPERVISION FROM THE FACP AND BE SUPPLIED WITH A LOCAL CELLULAR ANTENNA. WHEN THE MINIMUM CELLULAR SIGNAL STRENGTH PER THE MANUFACTURE'S INSTALLATION INSTRUCTIONS CANNOT BE MET, PROVIDE AN EXTERNAL ANTENNA LOCATED AND INSTALLED PER FIELD CONDITIONS, WITH THE OWNERS APPROVAL.
13. COORDINATE EXACT DEVICE LOCATIONS AND BACKBOX/MOUNTING REQUIREMENTS WITH THE ARCHITECTURAL ELEVATIONS, MANUFACTURER'S INSTALLATION INSTRUCTIONS, THE SYSTEM SUPPLIER'S SHOP DRAWINGS, AND THE WORK OF RELATED TRADES. INSTALL ALL CEILING-MOUNTED EQUIPMENT IN THE CENTER OF A LAY-IN TILE.

RVE 1901
REMINGTON & VERNICK ENGINEERS
2059 SPRINGDALE ROAD
CHERRY HILL, NJ 08003
(856) 795-9595, FAX (856) 795-1882
WEB ADDRESS : RVE.COM
Certification of Authorization: 24 GA 28003300
Excellence • Innovation • Service

DATE: 01-31-2025
DENNIS K. YODER
NJ PROFESSIONAL ENGINEER LIC. No. 31866

DATE: 01-31-2025
KAVAN R. SMITH
NJ PROFESSIONAL ENGINEER LIC. No. 56794

PLANS WHICH DO NOT BEAR AN EMBOSSED SEAL ARE NOT VALID.

No	REVISION	DATE	BY	CHK
1	ELSA PRELIMINARY REVISION	6/4/24	K.M.	K.M.
2	ELSA VEHICLE STORAGE BUILDING	10/28/24	K.M.	K.M.

FIRE ALARM DETAILS

EWING LAWRANCE SEWAGE AUTHORITY
ELSA VEHICLE STORAGE BUILDING
TOWNSHIP OF LAWRENCE — MERCER COUNTY — NEW JERSEY

DRAWN BY :	DESIGN BY :	CHECKED BY :	SCALE :
R.R.	K.M.		AS NOTED

DATE : 10.2023
JOB No. : 1102M026
SHEET No. : E-5.1

P:\Projects\Mercer County\1102M026\Sheets\E-5.1 FIRE ALARM DETAILS.dwg 1/29/2025 2:53:11 PM

P:\Projects\Mercer County\1102M026\Sheets\E-5.1 FIRE ALARM DETAILS.dwg

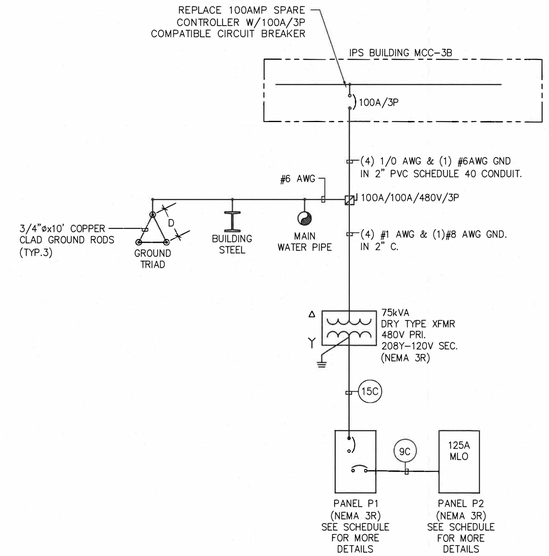

1 ELECTRICAL SINGLE LINE DIAGRAM

SCALE: N.T.S.

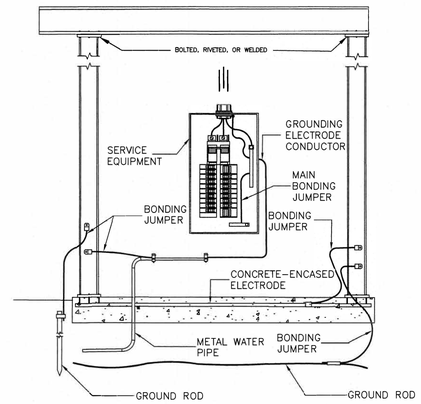

2 SERVICE EQUIPMENT GROUNDING DIAGRAM

N.T.S.

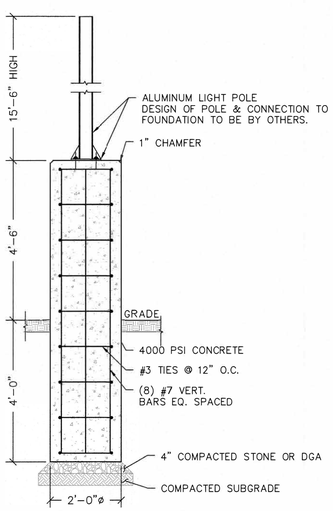

3 LIGHT POLE FOUNDATION DETAIL

N.T.S.

RTA

Round Tapered Aluminum Pole with Arms Single Mast — 4-Bolt Base

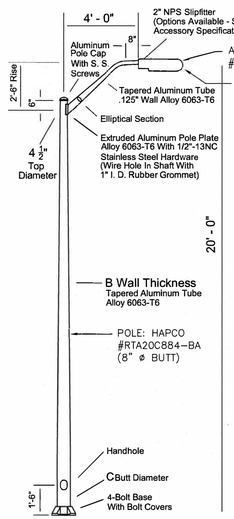

WARNING:
Do not install light pole without luminaire.

RTA20C6B4M14-

Catalog Number

Pole

Shaft and arm will be constructed of seamless extruded tube of 6063 Aluminum Alloy per the requirements of ASTM B221. The shaft assembly shall be full-length heat treated after base weld to produce a T6 temper.

Base Style

4-Bolt Cast Aluminum Base Flange of Alloy 356-T6 with Aluminum Bolt Covers (Alloy 356-F) and Stainless Steel Hex Head Attaching Screws.

Handhole

Reinforced, 3" x 5" curved Cast Aluminum Frame (Alloy 356-T6) with Aluminum Door and two (2) SS Hex Head Screws. A Grounding Provision incorporating a 3/8" diameter hole is provided opposite the Handhole.

Anchorage

Anchorage Kit will include four (4) L-shaped Steel Anchor Bolts conforming to AASHTO M314-90 Grade 55. Ten inches (10") of threaded end will be galvanized per ASTM A153. Kits will contain four (4) Hex Nuts, four (4) Lock Washers, and four (4) Flat Washers (all components Galvanized Steel). A bolt circle template will be provided.

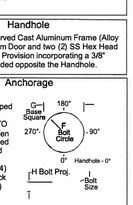

Vibration Damper

When determined necessary by Hapco, a Vibration Damper will be factory-installed inside the pole shaft. Customer specification of the damper is available.

MINIMUM EPA = 110

4 PARKING LOT FIXTURE DETAIL

N.T.S.

PANEL: P1 - NEMA 3R

VOLTAGE: 208Y/120V, 3ø, 4W+G | X MCB 225A / 3P | POLES: 54 POLE | AIC RATING: 22,000
MAIN BUS: 225A | MLO | MTG: SURFACE | LOCATION: RIGHT SIDE WALL

CKT #	CIRCUIT BREAKER TRIP	POLE	BRANCH CIRCUIT	DESCRIPTION	kVA PER PHASE A	B	C	REMARKS	REMARKS	kVA PER PHASE A	B	C	DESCRIPTION	BRANCH CIRCUIT	CIRCUIT BREAKER POLE	TRIP	CKT #
1	20	1		SPARE						0.83							2
3	20	1	2A	INTERIOR LIGHTING		0.54			1 1/2 HP		0.83		OVERHEAD DOOR	2C	3	15	4
5	20	1	2A	INTERIOR LIGHTING			0.40					0.83	#1				6
7	20	1		SPARE						0.83							8
9	20	1		SPARE					1 1/2 HP		0.83		OVERHEAD DOOR	2C	3	15	10
11	20	1		SPARE								0.83	#2				12
13	20	1		SPARE						0.58							14
15	20	1	2A	RECEPTACLES		0.54			1 HP		0.58		OVERHEAD DOOR	2C	3	15	16
17	20	1	2A	RECEPTACLES			0.36					0.58	#3				18
19	20	1	2A	RECEPTACLES	0.36												20
21	20	1	2A	RECEPTACLES		0.36							SPARE		3	15	22
23	20	1	2A	RECEPTACLES			0.36										24
25	20	1		SPARE						0.77			GUH-1	2A	1	20	26
27	20	1	2A	RECEPTACLES		0.36					0.77		GUH-2	2A	1	20	28
29	20	1	2A	RECEPTACLES			0.54					0.77	GUH-3	2A	1	20	30
31	20	1	2A	RECEPTACLES	0.36								SPARE		1	20	32
33	20	1	2A	SPARE									SPARE		1	20	34
35	20	1	2A	RECEPTACLES			0.36						SPARE		1	20	36
37	20	1	2A	RECEPTACLES	0.36					10.76							38
39	15	2	2A	EF-1		0.83			BUILDING #2		11.37		SUB-FEED	9C	3	90	40
41							0.83					10.27	PANEL P2				42
43	20	1		SPARE					PROVIDE LOCKING KIT	0.50			FIRE ALARM PANEL	2C	1	20	44
45	20	1	2A	MARCURCO PANEL		0.40							SPACE				46
47	20	1	3A	SITE LIGHTS			0.07						SPACE				48
49				SPACE									SPACE				50
51				SPACE									SPACE				52
53				SPACE			0.80						SPACE				54
					1.08	3.03	3.72			14.27	14.38	13.28					

138 TOTAL CONNECTED LOAD (AMPS) — TOTAL CONNECTED LOAD (kVA) 49.76

NOTES: 1. PANAL SHALL BE SERVICE ENTRANCE RATED
2

PANEL: P2 - NEMA 3R

VOLTAGE: 208Y/120V, 3ø, 4W+G | X MCB 90A/3P | POLES: 42 POLE | AIC RATING: 22,000
MAIN BUS: 125A | MLO | MTG: SURFACE | LOCATION: LEFT SIDE WALL

CKT #	CIRCUIT BREAKER TRIP	POLE	BRANCH CIRCUIT	DESCRIPTION	kVA PER PHASE A	B	C	REMARKS	REMARKS	kVA PER PHASE A	B	C	DESCRIPTION	BRANCH CIRCUIT	CIRCUIT BREAKER POLE	TRIP	CKT #
1	20	1	2A	SITE LIGHTING	0.75					0.83							2
3	20	1	2A	INTERIOR LIGHTING		0.35			1 HP		0.83		OVERHEAD DOOR	2C	3	15	4
5	20	1	2A	INTERIOR LIGHTING			0.30					0.83	#4				6
7	20	1	2A	RECEPTACLES	0.36					0.83							8
9	20	1	2A	RECEPTACLES		0.36			1 HP		0.83		OVERHEAD DOOR	2C	3	15	10
11	20	1	2A	RECEPTACLES			0.36					0.83	#5				12
13	20	1	2A	RECEPTACLES	0.54					0.83							14
15	20	1	2A	RECEPTACLES		0.36			1 HP		0.83		OVERHEAD DOOR	2C	3	15	16
17	20	1	2A	RECEPTACLES			0.36					0.83	#6				18
19	20	1	2A	RECEPTACLES	0.36					0.58							20
21	20	1	2A	RECEPTACLES		0.36			1 HP		0.58		OVERHEAD DOOR	2C	3	15	22
23	20	1	2A	GUH-4			0.77					0.58	#7				24
25	20	1	2A	GUH-5	0.77					0.80			EF-2	2A	2	15	26
27	20	1	2A	GUH-6		0.77					0.80						28
29	20	1	2A	RECEPTACLES			0.36		GFCI			0.45	TOILET RM ELECTRIC	2A	1	20	30
31	20	1	2A	RECEPTACLES	0.36				TOILET RM.	0.80			EBBH-1	2A	2	20	32
33	30	2	3A	INSTANTANEOUS		2.05					0.80						34
35				WATER HTR.			2.05					0.25	SEWER PUMP CONTROLLER	2A	1	20	36
37	20	1	2A	MARCURCO PANEL	0.40					2.55							38
39				SPACE							2.55		SEWER LIFT PUMP PACKAGE	3C	3	30	40
41				SPACE								2.55					42
					3.54	4.25	4.20			7.22	7.22	6.32					

91 TOTAL CONNECTED LOAD (AMPS) — TOTAL CONNECTED LOAD (kVA) 32.75

NOTES: 1
2

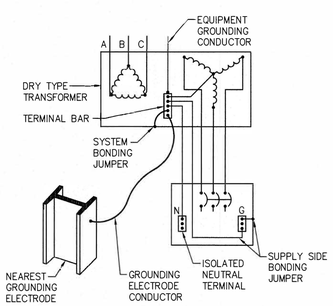

NOTE:

A GROUNDING ARRANGEMENT FOR A SEPARATELY DERIVED SYSTEM IN WHICH THE GROUNDING ELECTRODE CONDUCTOR CONNECTION IS MADE AT THE SOURCE OF SEPARATELY DERIVED SYSTEM (TRANSFORMER).

5 TRANSFORMER GROUNDING DETAIL

N.T.S.

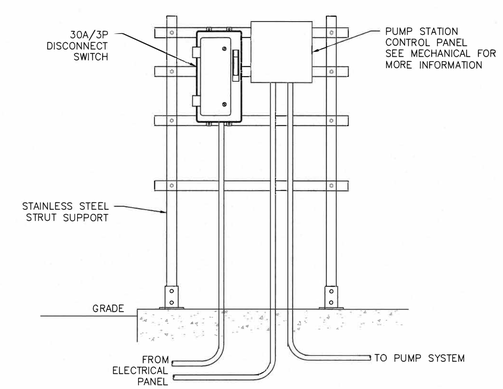

6 PUMP STATION CONTROL PANEL

N.T.S.

LIGHT FIXTURE SCHEDULE

TYPE	STYLE	MOUNTING	MANUFACTURER	CATALOG NO.	LAMPS	VOLTS	REMARKS
A	LINEAR STRIP LIGHT	PENDANT	KENALL LIGHTING	MLHAS-48-F-LG-PP-45B-35K8-ATW-DV	LED 49 WATTS	UNIV	
AE	LINEAR STRIP LIGHT W/ EMERGENCY BATTERY	PENDANT	KENALL LIGHTING	MLHAS-48-F-LG-PP-45B-35K8-ATW-DV-LEL	LED 49 WATTS	UNIV	PROVIDE 90 MIN. EMERGENCY BATTERY BACK-UP
L	WALL PACK WET LOCATION RATED	EXTERIOR WALL	EXO OUTDOOR	SG2-50-4K-UNV-BLT-PCU	LED 51 WATTS	UNIV	
S1	EXTERIOR COBRA TYPE POLE LIGHT	FOUNDATION BASE	EVOLVE (CURRENT)	E-01-0-B-AF-7-40-XA-D1-BLCK	LED 36 WATTS	UNIV	POLE: HAPCO #RTA20C884-BA (8" Ø BUTT) ARM: HAPCO #RTA20C6B4M14-BA
S2	EXTERIOR COBRA TYPE POLE LIGHT	FOUNDATION BASE	EVOLVE (CURRENT)	E-01-0-B-AW-40-XA-D1-BLCK	LED 36 WATTS	UNIV	POLE: HAPCO #RTA20C884-BA (8" Ø BUTT) ARM: HAPCO #RTA20C6B4M14-BA
L1	WALL PACK WET LOCATION RATED	WALL SURFACE	EXO OUTDOOR	SG1-10-4K-UNV-BLT-PCU	LED 11 WATTS	UNIV	
X	LED EXIT SIGN SINGLE FACE - NEMA 4X	WALL SURFACE	KENALL LIGHTING	METSU-MW-R-DT-CEL WET LOCATION RATED	LED	UNIV	WITH REMOTE EXIT READY OPTION PROVIDE FIXTURE WITH 90MIN. COLD WEATHER BATTERY
XR	REMOTE DUAL EMERGENCY EGRESS LIGHTS	WALL SURFACE	KENALL LIGHTING	METER-MW-2-6.5L-12VAC/DC	LED 2.6 WATTS	UNIV	WET LOCATION

RVE 1901
REMINGTON & VERNICK ENGINEERS
2059 SPRINGDALE ROAD
CHERRY HILL, NJ 08003
(856) 795-9595, FAX (856) 795-1882
WEB ADDRESS : RVE.COM
Certification of Authorization: 24 GA 28003300
Excellence • Innovation • Service

DATE: 01-31-2025
DENNIS K. YODER
NJ PROFESSIONAL ENGINEER LIC. No. 31866

DATE: 01-31-2025
KAVAN R. SMITH
NJ PROFESSIONAL ENGINEER LIC. No. 56794

No.	REVISION	DATE	BY	CHK
1	ELSA PRELIMINARY REVISION	6/4/24	K.M.	K.M.
2	ELSA VEHICLE STORAGE BUILDING	10/28/24	K.M.	K.M.

ELECTRICAL DETAILS AND SCHEDULES

EWING LAWRANCE SEWAGE AUTHORITY

ELSA VEHICLE STORAGE BUILDING

TOWNSHIP OF LAWRENCE — MERCER COUNTY — NEW JERSEY

DRAWN BY:	DESIGN BY:	CHECKED BY:	SCALE:
R.R.	K.M.		AS NOTED

DATE: 10.2023 — SHEET No.: E-6.1

JOB No.: 1102M026

P:\Projects\Mercer County\1102M026\Sheets\E-6.1 Electrical Details And Schedules.dwg 10/30/2025 2:53:13 PM

BONDING DETAILS AND AIR TERMINAL LOCATIONS SHOWN ARE TYPICAL, GENERAL EXAMPLES ONLY. FINAL EXTENT OF BONDING AND SPECIFIC FITTING APPLICATIONS TO BE DETERMINED IN FIELD BASED ON ACTUAL SITE CONDITIONS.

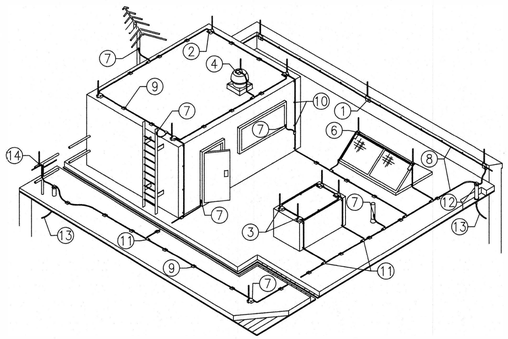

1. VERTICALLY MOUNTED AIR TERMINAL ON PARAPET SPACE 20 FEET MAXIMUM. SEE AIR TERMINAL DETAIL.
2. HORIZONTALLY MOUNTED AIR TERMINAL ON ROOF SPACE 20 FEET MAXIMUM. SEE AIR TERMINAL DETAIL.
3. AIR TERMINALS MOUNTED ON MECHANICAL EQUIPMENT ENCLOSURE.
4. AIR TERMINALS MOUNTED ON EXHAUST FAN ('DEAD–END' METHOD).
5. MID–ROOF AIR TERMINAL SPACED 50 FEET APART.
6. AIR TERMINAL ON SKYLIGHT WITH SADDLE TYPE AIR TERMINAL BASE.
7. BOND WINDOW, DOOR FRAMES, V.T.R'S, LADDERS, AND ANTENNAS, OR ANY METALLIC OBJECTS WITH BONDING LUGS AND SECONDARY CONDUCTOR.
8. MAIN LIGHTING CONDUCTOR.
9. ADHESIVE CABLE HOLDER EVERY 3 FEET MAXIMUM SPACING.
10. CABLE CLIP WITH STAINLESS STEEL SCREWS EVERY THREE FEET MAXIMUM SPACING.
11. CABLE CONNECTOR.
12. THRU–ROOF CONNECTOR.
13. LIGHTING DOWN CONDUCTOR.
14. AIR TERMINAL MOUNTED ON GUARDRAIL WITH PIPE RAILING BASE.

1 TYPICAL BONDING AND AIR TERMINAL LOCATION DETAIL
N.T.S.

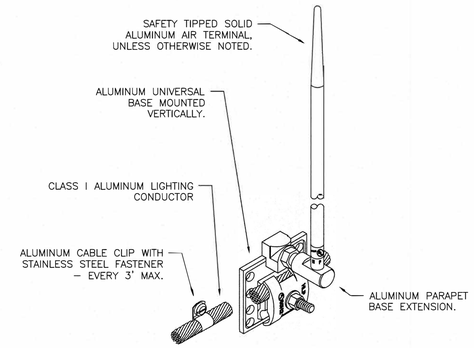

2 TYPICAL AIR TERMINAL - VERTICAL WITH OFFSET DETAIL
N.T.S.

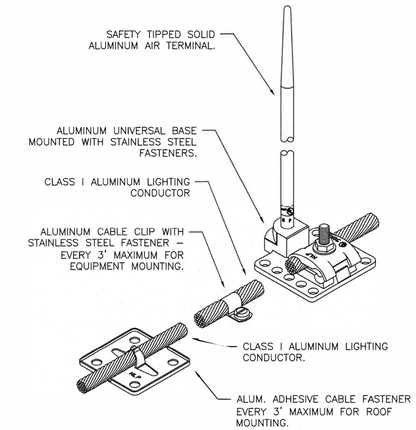

3 AIR TERMINAL - HORIZONTAL DETAIL
N.T.S.

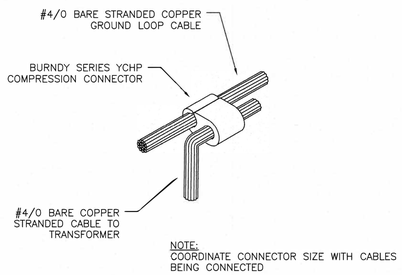

4 TYPICAL CABLE TO CABLE DETAIL
N.T.S.

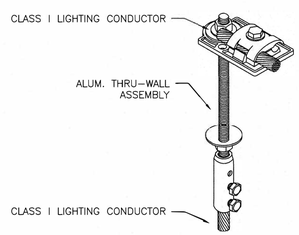

5 TYPICAL THRU WALL ASSEMBLY 'T1' DETAIL
N.T.S.

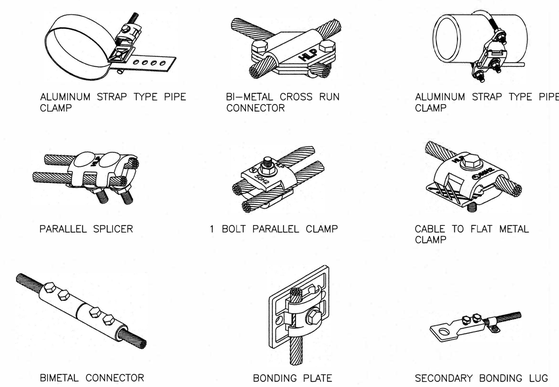

6 TYPICAL BONDING/SPLICING DETAILS
N.T.S.

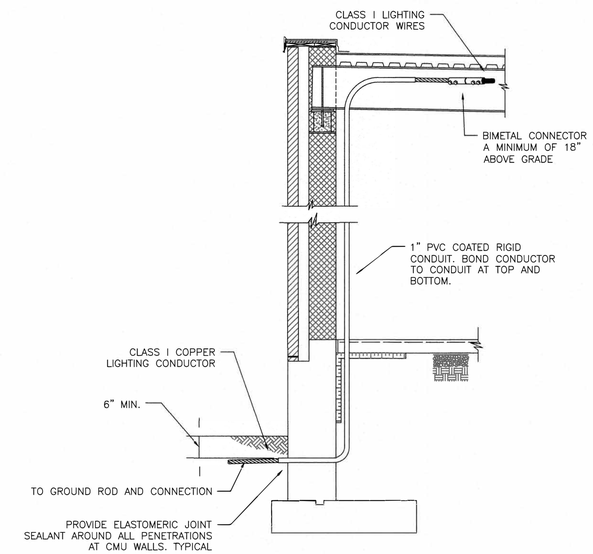

7 TYPICAL DOWN CONDUCTOR SECTION DETAIL
N.T.S.

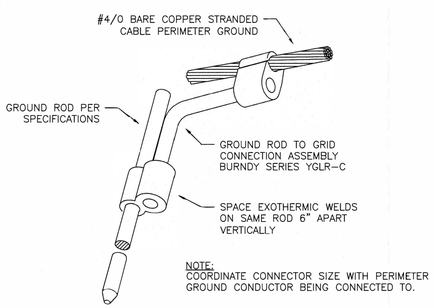

8 TYPICAL CABLE TO GROUND DETAIL
N.T.S.

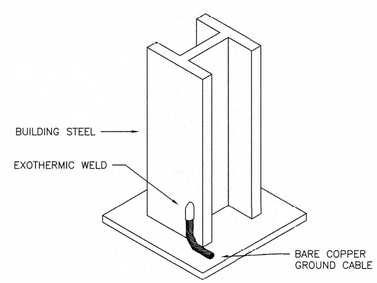

9 CABLE TO BUILDING STEEL EXOTHERMIC WELD CONNECTION
N.T.S.

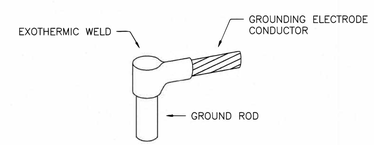

10 CABLE TO GROUND ROD EXOTHERMIC WELD CONNECTION
N.T.S.

RVE 1901
REMINGTON & VERNICK ENGINEERS
2059 SPRINGDALE ROAD
CHERRY HILL, NJ 08003
(856) 795-9595, FAX (856) 795-1882
WEB ADDRESS : RVE.COM
Certification of Authorization: 24 GA 28003300
Excellence • Innovation • Service

DATE: 01-31-2025
DENNIS K. YODER
NJ PROFESSIONAL ENGINEER LIC. No. 31866

DATE: 01-31-2025
KAVAN R. SMITH
NJ PROFESSIONAL ENGINEER LIC. No. 56794

No.	REVISION	DATE	BY	CHK
1	ELSA PRELIMINARY REVISION	6/4/24	K.M.	K.M.
2	ELSA VEHICLE STORAGE BUILDING	10/28/24	K.M.	K.M.

ELECTRICAL DETAILS

EWING LAWRANCE SEWAGE AUTHORITY
ELSA VEHICLE STORAGE BUILDING
TOWNSHIP OF LAWRENCE — MERCER COUNTY — NEW JERSEY

DRAWN BY:	DESIGN BY:	CHECKED BY:	SCALE:
R.R.	K.M.		AS NOTED
DATE: 10.2023		SHEET No.: E-6.2	
JOB No.: 1102M026			

P:\Projects\Mercer County\1102M026\Sheets\E-6.2 Electric Details.dwg 10/30/2025 2:33:19 PM

P: \Projects\Mercer County\1102M026\Sheets\E-6.2 Electric Details.dwg